THIS DRAWING IS THE PROPERTY OF PROJECTS & DEVELOPMENT INDIA LIMITED (PDIL) AND NOT TO BE COPIED OR REPRODUCED OR SHOWN TO THIRD PARTIES WITHOUT THE WRITTEN PERMISSION OF PDIL.

TP - A	SERVICE TYPE	SIZE	COORDINATE / ELEVATION	
1	LP STEAM	*	S-625, W-680	EL. - 4.5 Mtrs.
2	COOLING WATER SUPPLY	*	S-625, W-680	EL. - 3.0 Mtrs.
3	COOLING WATER RETURN	*	S-625, W-680	EL. - 3.0 Mtrs.
4	INSTRUMENT AIR	2"	S-625, W-680	EL. - 4.5 Mtrs.
5	SERVICE WATER	3"	S-625, W-680	EL. - 4.5 Mtrs.
6	PLANT AIR	2"	S-625, W-680	EL. - 4.5 Mtrs.

TP - B	SERVICE TYPE	SIZE	COORDINATE / ELEVATION	
1	DRINKING WATER	2"	S-691, W-650	EL. - 0.5 Mtrs.

TP - C	SERVICE TYPE	SIZE	COORDINATE / ELEVATION
1	FIRE WATER	*	FROM NEAREST HEADER

S.NO.	EQUIPMENT LIST
01	STILLING CHAMBER
02	HRSCC-I
03	SLUDGE COLLECTION SUMP
04	THICKENER FEED PUMPS
05	CENTRIFUGE BUILDING (CENTRIFUGE)
06	HRSCC-II
07	SLUDGE THICKENER
08	CENTRIFUGE FEED PUMP
09	CLARIFIED WATER STORAGE TANK - I
10	DMF- I
11	DMF- I I
12	CHEMICAL HOUSE
13	UF / RO SKID
14	PERMEATE WATER STORAGE TANK
15	RO PERMEATE WATER STORAGE TANK
16	RO-II REJECT WATER STORAGE TANK EVAPORATOR FEED TANK
17	ZLD SYSTEM
18	CRYSTALIZER SALT STORAGE AREAFIRE WATER
19	CONTROL ROOM

NOTES : -

1. TIE IN COORDINATES ARE TENTATIVE AND TO BE VERIFIED DURING DETAIL ENGINEERING.
2. LINE ROUTING IS TENTATIVE AND TO BE UPDATED DURING DETAIL ENGINEERING.
3. EQUIPMENT SIZE / LOCATION ARE TENTATIVE AND FOR PLANNING PURPOSE ONLY. AND TO BE FINALIZED DURING DETAIL ENGINEERING.
4. FIRE FIGHTING TIE IN TO BE TAKEN FROM SUITABLE LOCATION FROM EXISTING RING.
5. FGL – 172.00M.

LEGENDS :-

- PROPOSED NEW FACILITY
- TO BE DISMANTLE
- PROPOSED NEW PIPE RACK BRIDGE
- PROPOSED NEW PIPE RACK

REV.	DATE	DESCRIPTION	PPD.	CKD.	APPD.
0	17.08.2023	ISSUED FOR TENDER	ANIL	NSY/AS	PK

CLIENT : RAMAGUNDAM FERTILIZERS AND CHEMICALS LIMITED (RFCL), TELANGANA, INDIA

REV. 0

SHEET 1 OF 1

PROJECT : CONSULTANCY SERVICES FOR IMPLEMENTATION OF ZERO LIQUID DISCHARGE (ZLD) UNIT AT RFCL, RAMAGUNDAM PLANT

SCALE : 1: 1300

DRG. No.: PC211-7611-0001

TITLE : LAYOUT / PLOT PLAN OF ZLD PLANT

FILE : PC211-7611-0001_Rev. 0

पी डी आई एल PDIL PROJECTS & DEVELOPMENT INDIA LTD. NOIDA

PART II: TECHNICAL

SECTION – 5.2.4

DESIGN SPECIFICATION – FIRE FIGHTING SYSTEM

PLANT: RAMAGUNDAM FERTILIZERS AND CHEMICALS LIMITED

PROJECT: IMPLEMENTATION OF ZERO LIQUID DISCHARGE (ZLD) UNIT

AT

RAMAGUNDAM FERTILIZERS AND CHEMICALS LIMITED (RFCL),

TELANGANA, INDIA

 All rights reserved

TABLE OF CONTENTS

LIST OF ATTACHMENTS

ATTACHMENT NUMBER	DESCRIPTION	NUMBER OF SHEETS
PC211-7611-921-0002	CONCEPTUAL FIRE HYDRANT LAYOUT	01
PC211-PNMP-PPE LIST	PERSONNEL PROTECTION EQUIPMENT LIST	03
PC211-PNMP-TS-PPE	TECHNICAL SPECIFICATION OF PERSONNEL PROTECTIVE EQUIPMENT	12
A747-308-81-41-04804_REV_03	LAYOUT OF EXISTING FIRE WATER NETWORK	01

All rights reserved

1.0 PURPOSE

The purpose of this document is to establish the requirements of the fire fighting system for applicable facilities of the package plant.

This document is a general specification providing typical requirements of layout, material, testing, etc. for various fire fighting systems.

This specification covers design basis and execution requirements for fire protection system for fertilizer plant. The provisions shall be made, in order of precedence, as per statutory regulations, TAC guidelines, job specifications and safe engineering practices.

2.0 SCOPE

Contractor shall provide fire fighting system as mentioned in this document in accordance with TAC/NFPA/NBC 2016 (and/or Latest Edition) for applicable facilities of the package plant.

3.0 DESIGN CRITERIA

The Fire Protection Philosophy is based on Loss Preventive and Control. The adequacy of fire protection facilities for plant is very important because of the inherent hazard it carries. A fire in one part/section of the plant can endanger other sections of plant as well. If fire breaks out, it must be controlled / extinguished as quickly as possible to minimise the loss to life and property and to prevent further spread of fire. In this job, the design of the package plant is a part of Ammonia Urea plant, which is considered in high hazard (B), as per NBC 2016.

Unless otherwise specified in the NIT the design shall meet requirement of applicable standard over and above the standards mentioned below:
IS 3034: 1993 - Fire Safety of Industrial Buildings: Electrical Generating and Distributing Stations - Code of Practice [CED 36: Fire Safety]
IS 12459: 1988 Code of Practice for Fire Safety in Cable Runs [CED 36: Fire Safety]
IS 1646: 1997 Code of Practice for Fire Safety of Buildings (General): Electrical Installations
CEA (Measures relating to Electrical Safety) Regulations 2010
IS 15394: 2003 - Fire Safety in Petroleum Refineries and Fertilizer plants
IS 3844: Installation and maintenance of internal fire hydrants and hose reels on premises
National Building Code 2016 (and/or Latest).

3.1 Fire Water Demand

The fire water demand shall be determined based on the single fire contingency in the proposed installation. The estimated firewater demand shall be the sum of water required for fire-fighting equipment (e.g. fire monitor, hose stream) based on fire breaking out in fire risk area/s at any one time over the entirety of the site. The biggest firewater demand of the fire risk areas of plant shall be the total firewater demand.

Note:

1. Existing Sub-station, Control room and Pump house are to be used for the ZLD plant and existing fire facility to be used for the same.

2. Fire water Tie-in shall be taken from the nearest point on the existing FW ring. Tapping for supply of water for hydrant system should be provided with two direction to ensure easy

 All rights reserved

maintenance and uninterrupted water supply in case of break down and shall be planned in such a way that outage of anysection of fire water line should not affect other section.

4.0 FIRE PROTECTION SYSTEMS

The following fire protection facilities shall be provided depending upon the nature or the installation and risk involved wherever applicable.

a) Fire hydrant system
b) Water spray/sprinkler system
c) Gas flooding system
d) Fire detection, alarm & communication system
e) First aid fire fighting equipments including Portable fire extinguishers
f) Personnel protective equipments (PPE)

4.1 Fire Hydrant System

The engineering (sizing, material thickness, supports, etc.,) of fire fighting network for the above mentioned fire protection systems / fire protection facilities, shall be provided by bidder, on the basis of codes, standards, specifications, drawings of this document.

Fire water network shall consist of mostly aboveground and/or underground, if required, piping systems.

Around units the fire water mains shall be laid aboveground and directly buried and/or in trenches, if it is laid underground. The underground ring main network system shall be laid at minimum one meter earth cushion. Top of casing pipe (RCC Hume pipe) of underground piping crossing roads (peripheral road, package unit road, access road/ways) shall be at min. 1.5 metre depth.

All underground fire water piping shall be externally protected from corrosion by wrapping and coating of cold tape as per attached specification, for underground CS pipe which shall extend up to min. 500 mm, above / beyond grade wherever applicable.

Above ground fire water piping shall be painted as per painting specification and the paint shall be conforming to shade as per IS 5.

Wherever fire water line will cross the roads, same shall be put under a suitable hume pipe or culvert, with proper wrapping, coating as a anticorrosive treatment (Cold Tape Type, as per detailed specification provided elsewhere in NIT).

Flushing point with isolation gate valve and pressure gauge points (approx at the rate 300mtr. and at all battery limit tie in points) with isolation gate valve shall be provided on all headers.

Network shall be laid in closed loops to ensure multidirectional flow. Isolation valve to be provided at every 300m (max) and at crossings (Junctions) to ensure easy maintenance and uninterrupted water supply in case of break down and shall be planned in such a way that outage of any section of fire water line should not affect other section.

Hydrant posts shall be installed with a branch “L” shape piping to avoid directly fall of leaking water on main header.

RCC slabs (Minimum 1500mmX1500mmX100mm thk.) shall be provided at the grade level beneath of each Hydrant/Monitor/HVLR// 3way- 4 way fire brigade connection post and respective hose box.

Up to 2.0 m portions of the headers (if above ground) on both sides of hydrant branching and the entire branch piping near of hydrants shall be epoxy painted.

 All rights reserved

Isolation valves (gate valves, rising spindle) shall be provided below monitors and at all hydrants. Suitable restriction orifice shall be provided at downstream of isolation valve of hydrant post to maintain the pressure requirements as per TAC / IS15394.

Fire water pressure at the farthest point shall be a minimum of 7 kg/cm2 after installation of headers and sub headers.

All fire water piping shall be tested to hydraulic test pressure of 18 kg/ cm2 (g) and/or as calculated considering pump shut-off pressure.

Radiography requirements shall be as per TAC (minimum 10%).

For process units, external ring header with hydrants and an internal distribution with monitors and hose reels shall be installed.Hydrant heads shall be placed at a minimum distance of 15m from process equipment.

Monitors around heater areas, if any, shall be necessarily provided and located in such a manner that the heater can be isolated from the plant.

Monitors shall be provided to cover the high rise columns, equipments etc. of height 15 mtr. and above, unless otherwise specified in layout drawing.

There may be cases where due to horizontal obstruction, a particular vessel/ process column may not be approachable by ordinary monitor or hydrant, elevated monitors shall be provided to take care of such conditions.

Tall columns, structure, towers and equipment where it may not be possible to provide access staircases with hydrants on landing, will be considered as protected by hydrants at ground level, provided they are less than 15 m in height. When the height exceeds 15 m, the concerned hydrants shall be replaced by monitors.

Alternate hydrants for protection of loading unloading bays, rail/truck gantries shall be replaced by water/foam monitors.

Number of hydrants shall be based on one hydrant post with two hydrant valves for every 30m (max.) of external perimeter of process units and storage tank area. For utility and other building areas, this distance shall be a maximum of 45m.

Hydrants and/or water monitors shall be located keeping in view the different risks within the premises which are to be protected and ensuring effective coverage.

Double hydrants (IS: 5290 type A, hydrant valve with single outlet) on each hydrant post (i.e. two hydrant valves mounted on each stand post) and at every 30m centre to centre, along the hydrant mains, shall be provided.

Extension of hydrants/monitors for spill fire (as required by TAC/ IS15394) shall also to be provided.

Indoors hydrants with hydrant valves (landing valves), hose reels and hose box containing accessories, for plant buildings and non-plant buildings, shall be provided as per IS-3844. In case of buildings, hydrants shall be located at not be less than 2 m and not more than 15 m from the face of building.

Double headed landing valves (two numbers, type-A, Landing valves on single stand post), shall be provided on the landing of first floor and above on all the buildings/Tech structure/platforms etc. with isolation valve at each tapping for landing valve assembly.

 All rights reserved

The monitors shall have isolation valve. Monitor location shall be given special consideration for protection of cluster of towers, heaters and other high structures, where it may not be possible to approach the higher levels. Minimum of two monitors shall be provided for each such area.

Field adjustable variables flow type remote operated monitors shall be provided for the protection of inaccessible equipment.

Contractor to finalise hydrant layout on plot plan, with all the requirements such as number of Hydrants, Monitors, Foam system, sprinkler system etc., based on all statutory requirements & Code Guidelines, considering ease of maintenance and safe approach for fire fighting. Due consideration is to be given for providing Emergency escape routes also. Hydrants are to be strategically located to obtain maximum advantage of layout.

Fire brigade connection (3 way & 4 way) points with Isolation gate valve as per TAC/ IS shall be provided at strategic locations

Above ground pipe shall be supported on RCC pedestals (refer attached drawing). wrapper plate (thickness same as pipe & covering approx. 120 degree at bottom portion of pipe) shall be provided at each support for above ground pipe (6” NB and above). Supports for piping system and structures shall be provided as per support specifications of NIT. If support specification not provided in NIT, safe adequacy calculations shall be submitted by bidder for review/approval by PMC/owner.

4.1.1 Buried Pipes

The following points to be considered in designing of buried pipes

i) All underground buried metallic piping shall be coated and wrapped with cold tape and laid at minimum one meter earth cushion.
ii) Underground pipe at crossing roads, access ways shall have RCC casing pipe (Culvert or Hume pipe). Underground piping at rail crossing shall be as per Indian railways.
iii) Valve chamber wherever required shall be made of brick or concrete. Valve chamber should be spacious to attend valves during operation/maintenance.
iv) All U.G. headers shall clear equipment foundations.
v) Provide break flange at + 500 MM from floor level to isolate underground pipe from above ground piping with insulating gasket kit.
vi) Pipes shall be laid below electrical cables, if any.
vii) Buried Pipes shall be laid in trenches after excavation, covered with 150mm sand bed all around them, backfilled and properly rammed.
viii) RCC thrust blocks shall be provided as per engineering requirement.
ix) Cathodic protection shall be provided for buried pipes.

4.1.2 Piping in Trenches

The following points to be considered in designing of trench pipes:

i) Piping located below grade, requiring inspection, servicing or provided with protective heating.
ii) Fire water lines/Process lines.
iii) Drain lines requiring gravity flow trenches.
iv) Sump for valves and trenches shall be provided.
v) Suitable draining scheme for trenches shall be provided.
vi) Valves in trenches shall be provided with extended stems. If hand wheels of the valves are located more than 300 mm below the cover plate, the valves shall be provided with extended stems extending to within 100 mm below the cover plate.

 All rights reserved

vii) The trenches shall be lined with RCC, then provided with 150mm sand bed and also shall be covered with RCC cover after laying of wrapped and coated pipes in them. Top of pipe shall be at min one meter depth.

viii) RCC thrust blocks shall be provided as per engineering requirement.

4.2 Water Spray System, water sprinkler system and water curtain system

Water spray systems shall be provided as per TAC / job specifications.

Water spray, water curtain systems, permanently connected to fire water network, shall be provided with piping system, detectors, spray nozzles (chrome plated brass), deluge valves (dry type, pneumatically & hydraulically operated (only use where air is not available) with manual by pass valve, remote automatic and local manual operation), isolation valves, strainer, low point drain with valve and suitable restriction orifice to maintain the pressure requirements as per TAC/ IS.

Instrument air service Piping/ Tubing shall be SS304.

Downstream of deluge valve shall be provided with galvanized carbon steel piping system.

Water spray application rates shall be as per TAC/IS/NFPA.

4.2.1 Medium velocity Water Spray (MVWS) System

- To be provided for the followings locations, but not limited to.
- Compressor seals
- Lube oil consoles
- Knock out drums (with hydrocarbon bearing service)
- Cable cellars
- Diesel/Petrol/Kerosene oil or any hydrocarbon liquid / oil tank
- solid hydrocarbon material handling plant area
- Pumps under racks.

4.2.2 High velocity Water Spray (HVWS) System

To be provided for the followings locations, but not limited to.

- Transformers of minimum 10MVA rating or with oil content of minimum 2000 litres.

4.2.3 Water curtain system

To be provided for the followings locations, but not limited to.

- Ammonia/ Toxic gas/ vapour compressor and pumps
- Ammonia/ Toxic gas/ vapour storage tank
- Ammonia liquid tanker loading area

4.2.4 Sprinkler System

The sprinkler system, with galvanized carbon steel piping, shall be designed and installed at the following locations, but not limited.

Sprinkler system with deluge valves (dry type), shall be installed at the following location/ buildings, if applicable.

- Laboratory
- Chemical room/storage area.

Sprinkler system (wet type with QBD), shall be installed at the location/ buildings, if applicable.

 All rights reserved

- All buildings as per NBC 2016 (and/or latest edition)

4.3 Foam System

Foam system shall be provided for transformer area and hydrocarbon oil tank area.
The transformer area shall be surrounded by at least 2 foam monitors strategically installed.
Hydrocarbon oil tank area and LPG/NG gas skid area shall be surrounded by at least 3 foam monitors strategically installed, so that each tank or each gas skid is fully covered within the monitors throw range.
Water cum foam monitors (SS304 body & nozzle, fixed stand post type, manual operation, 500-750 USGPM variable type flow, self inducting foam induction mechanism) along with portable type foam cans (each 200 Litres capacity) with 3% AFFF Foam, shall be provided for above areas.

The foam system shall be considered for protecting tanks and other applicable equipments for hydrocarbon services as per NFPA requirements. The foam system shall comprise of foam concentrate proportioning equipment, foam makers, piping system and foam discharge devices, as applicable, as per NFPA. The system shall automatically actuate foam on detection of fire.

4.4 Clean agent flooding system

Gas flooding system with clean agent, diverter valve (if feasible), detectors & accessories for Control Room, Computer room, Computer console room, UPS room, Battery room, server/database rack room etc. shall be protected by clean agent system as per NFPA-2001(Inergen/ Argonite/ Novec 1230).

5.0 MATERIAL SPECIFICATION

a) Materials & equipments used for fire protection system shall be in accordance with NFPA/TAC requirements and/or attached specifications of NIT.
b) Pipes(API 5L Gr. B, SMLS upto 6”NPS and welded for higher sizes) fittings(ANSI/ASME), Valves(API), flanges(ANSI/ASME), Spray nozzles and deluge valves, quartzoid bulb detectors(QBD), Detector piping, Hydrant, Monitors, Hose Boxes, Hoses shall be as per piping material specifications (PMS), and/or attached specifications of NIT.
c) Cast Iron valves or any cast iron piping component like pipes, fittings, flanges, valves, fasteners, gaskets, etc. shall not be used for fire fighting system or for any service.
d) Spiral welded pipes shall not be used.
e) Seamless pipes/fittings are acceptable in lieu of welded pipes/fittings, but welded pipes/fittings are not acceptable in lieu of seamless pipes/fittings.
f) LSAW pipes are acceptable in place of ERW pipes, for same thickness.
g) Double seam , 180 degree apart , is allowed for pipe sizes 36" and larger only.
h) Circumferential seams (minimum 2 meter apart) is allowed for pipe sizes 36" and larger only.
i) Flanges shall be in one piece material, without any joints.
j) All flanged valves (except forged) shall have flanges integral with the valve body.
k) Forgings are acceptable in place of castings but not vice-versa.
l) Valves in saline water (if applicable) service shall be with non ferrous trims and all wetted parts other than trims shall be epoxy coated.
m) Generic material of valves body, required as per process/service conditions but not specifically mentioned, shall not be lower in chemical composition than the connecting pipe material.
n) PN equivalent rating for Class150# valves shall be minimum PN16.

 All rights reserved

5.1 Hydrant Valve shall be BIS approved (IS-5290) with following detail:

Inlet	: 3"-ANSI 150 # RF
Outlet	: 63mm
Pipe Size & material	: 4" CS
Capacity	: 36 cum/hr
Type	: Oblique angle type as per TAC requirement
Material	: SS304

5.2 Water Monitor

Nozzle bore size	: 38mm (Aqua fog /foam with arrangement of jet and spray).
End connection	: 4"- 150 # RF
Run Pipe Size	: Min. 6", CS
Capacity	: 2580 LPM
Material	: SS304
Approval	: IS-8442

5.3 Water cum Foam Monitor:

Nozzle bore size	: 38mm (Non aspirating type-Aqua fog / foam with Arrangement of jet and spray)
Run Pipe Size	: Min. 6", CS
Capacity	: 750 GPM
Material	: SS304
Approval	: UL

5.4 Long Range Water monitor

Capacity	: 2000/1000/750/500 GPM (as required)
Horizontal Range	: 50 m approx.
Material	: SS304
Approval	: UL

5.5 Hose Reel

Fire hose reels (IS-444) shall be considered at strategic locations around block as first aid fire contingency. These shall be indoor wall mounted and outdoor floor mounted type on structure and shall have water connection from hydrant network. Each hose reel shall have 30 metre long hose with nozzle. Hose reel shall be minimum 30m long x 20mm bore.

Hose reel shall cover all process areas in ground floor. Indoor wall mounted Hose reel shall be provided with each landing valve. Outdoor floor mounted type on structure at strategic locations @ 01 no.(minimum) for each package area.

5.6 Hose Box

Hose boxes shall be made of M.S. material and painted red with dimensions 18 SWG thick M.S. sheet, size 900 mm x 600 mm x 250 mm. Each box shall contain 2 nos.x 15 m of 21/2" fire hose (IS-636 Type-B) with gun metal nozzle, coupling, universal branch pipe (IS-903), MS spanner. 1no. Hose Box with accessories shall be provided for each hydrant post and each fire brigade connection (3 Way, 4 Way with isolation gate valve).

5.7 Portable Fire Extinguishers

Portable fire extinguishers (IS-2190, BIS marked / BIS approved) as per TAC shall be provided for plant & non plant buildings & areas, at strategic locations. Portable extinguishers of 9 kg

 All rights reserved

(wheeled) & 50kg (wheeled) DCP (ABC type), 4.5kg (mounted), 6 kg (mounted) & 22.5kg and above (wheeled) CO2 type shall be provided. Contractor shall specify the numbers and location for Owner's review and approval.

5.8 Deluge valve

Deluge valve shall have flanged body/housing & cover (Cast Steel ASTM 216 Gr. WCB), Internal Metallic parts SS304, Diaphragm Rubber/ Non metallic) UL listed, Red Painted, pneumatically actuated.

6.0 FIRST AID FIRE FIGHTING EQUIPMENTS

The selection of safety equipment should be such that it is correctly related to the type of fire expected in the area.
The general guideline for selection and use shall be as per TAC/IS requirements. Fire extinguishers shall be provided as per TAC/IS.
Contractor shall provide the Fire extinguishers items (BIS approved) as specified in tender.

6.1 Fire extinguisher

Fire extinguishers as per TAC shall be provided for process risk and at each landing of operating platform of technological structures, for the protection of equipment as a means to cope up with fire at incipient stage. Supply of all Fire Extinguishers shall be with BIS Mark.
Powder used in DCP type fire extinguishers shall be MAP 90% ABC powder, UL listed & BIS approved.
The number should be determined based on the max. travelling distance of 15 M. At least one fire extinguisher shall be provided for every 250 m2 of hazardous operating area.
Chemicals/ Consumables used in the fire extinguisher shall UL listed.

Following Fire Extinguisher types shall be provided, as applicable :

1) 6 Kgs., 9 Kgs. Capacity DCP Extinguishers (ABC type) shall be provided on Technological platforms/process ground floor and Control rooms.
2) 4.5 Kgs. Capacity Co2 Extinguishers shall be provided for buildings, sub stations & control rooms.
3) 22.5 Kgs Capacity Co2 Extinguisher shall be provided near transformer bay.
4) 50 Kgs capacity DCP Extinguishers (ABC type) shall be provided at critical operating area in plant.
5) 2 Kgs, 4 Kgs capacity clean agent Extinguishers shall be provided for Control Room, Computer room, Computer console room, UPS room, Battery room, server/database rack room etc.

6.2 Sand Bucket

Sand buckets filled with sand along with scoops, mounted on structural support stand each with at least 3 sand buckets), shall be provided in Transformer bay, Sub Station, buildings, Technical structure, platforms, Pump house, etc.

The sand buckets shall have round bottom with bottom handle having 9 liter water capacity conforming to IS: 2546. The sand stored in bucket shall be fine and free from oil, water or rubbish. Rain protection of suitable design shall be provided for all sand buckets.

 All rights reserved

6.3 SAFETY SIGNAGES

Contractor shall provide the safety signages (in English & Hindi language) as per NBC/TAC , at strategic locations, for plant/ non plant areas buildings, technological structure, areas.
Safety signages must be visible under both lighted & darkness conditions.

7.0 SAFETY EQUIPMENTS/PERSONNEL PROTECTIVE EQUIPMENTS (PPE)

Contractor shall provide the following safety items with quantity specified in PPE list.

8.0 EMERGENCY ESCAPE ROUTE

Escape route shall be marked with signage, exit point. Escape route shall not be obstructed in any way. No single accident should be capable of blocking both alternatives. Escape route should take shortest route to assembly point defined within plant.
In case of process structure, satisfactory access shall be provided to all parts of each floor by means of incombustible internal or external staircases.
Exact numbers, width, location, etc. of such staircases and ramps for basements shall depend on travel distance requirements given under National Building code of India.

9.0 EXECUTION, INSPECTION AND TESTING

All execution, inspection and testing for completion of fire protection system shall be carried out based on codes, standards and specifications. Contractor shall develop detail inspection and testing procedures for review by owner. Contractor shall carryout demonstration test for each installed system as per scope of work.

The Contractor shall meet all requirements for inspection and testing of the systems.

10.0 QUALITY ASSURANCE SYSTEM

All work/services to be performed by the Contractor under this contract shall be of specified/approved quality and Contractor shall have a quality assurance/quality control (QA/QC) system during the performance of various activities such as engineering, procurement, tendering, construction etc. Review/approval of activities by Owner/PMC shall not however dilute the responsibility of Contractor for maintaining quality.

The objective of the quality assurance scheme of the Contractor shall be to ensure the conformity of equipment, material, site construction (if any) to various standards, specifications, drawings and technical requirements that are being mutually agreed between the Contractor and Owner/PMC/TPI. Quality Assurance System should clearly indicate the organizational approach for quality control and quality assurance of the various equipment/construction activities (if any) and also provide a verifiable evidence of the Contractor having carried out all the activities laid down in the bid document and the procedure. Such conformity to quality level shall be ensured by controlling the quality level of purchased items at vendor's/sub-vendor's shop/site and shall cover from source surveillance to final inspection. The Contractor to submit a detailed inspection and testing plan for various shop/site activities for review by Owner/PMC/TPIA.

11.0 INSPECTION

The Contractor is required to organize a proper inspection and expediting system so as to ensure timely delivery of all the items/equipment meeting the specified quality criteria. This function has to be carried out by appropriate deployment of qualified personnel who have wide experience in their respective fields. Inspection of all items supplied under this contract shall be carried out by independent third party inspection agencies approved by PDIL/OWNER. Third

 All rights reserved

party inspection charges for foreign origin items shall be quoted by bidder. Third Party Inspection shall be done by owner approved third party inspection agencies.

Inspection authority means the Third Party Inspection Agencies (TPIA) approved by the PDIL/Owner to carryout inspection of materials.

The inspecting authority shall have the right to select random samples for check test and reject materials, if samples furnished as above and tested as per the specifications fail to meet the requirement specified.

All the items shall be inspected and tested in the presence of one or more representatives of the purchaser during various stages of manufacturing. Material shall be considered acceptable for dispatch only after final certificate of acceptance is issued by the Inspector. Testing performed in the presence of the purchaser's representatives shall not relieve the supplier of their own responsibilities and guarantees and any other contractual obligations.

Quality Assurance plan (QAP) / Inspection Test Plan (ITP) shall be submitted by bidder for approval by Third Party Inspection Agency (TPIA).

The Contractor shall make arrangement for inspection and testing by statutory authorities, if applicable, at various stages of the work.

11.1 Scope of Inspection by TPIA:

i) Review of MTC (all batches).
ii) Visual check for surfaces, external appearance (10% random witness).
iii) Dimensional check (10% random witness).
iv) Positive Material Identification (PMI) for alloy steels/austenitic steels (10% random witness).
v) Hydrostatic test (10% random witness for pipes, fittings, valves, strainers, traps, collecting heads, draw off connection, hoses, hose reels, extinguishers, bellows, personnel protective equipments (if applicable for any item), fire fighting/protection equipments.
Hydrostatic test shall be10% random review for other items.
vi) Any testing/demonstration required as per relevant code/standard/specification:10% random review.
vii) Packing: Report review.
viii) Documentation (MTC, Inspection Release Note): 100% Review.

12.0 TESTING

All testing shall be done, as per relevant specifications and/or NIT specifications.

12.1 Non Destructive Testing

10% radiography of butt welds and 10% DP/ MP test of fillet welds shall be done for pipe classes in 150# & 300#.
100% radiography on butt weld joints and 100% DP/MP for fillet welds test shall be done for pipe classes in 600# & above.

Radiography procedure, areas of casting to be radiographed, and the acceptance criteria of valves shall be as per ASME B16.34.

The minimum requirement of radiography shall be as under :

Pipe Class	Size (NPS)	Qty
150	Up to 24"	5%

 All rights reserved

150	26” & above	100%
300	Up to 16”	10%
300	18” & above	100%
600 & above	All	100%

13.0 DOCUMENTATION

Drawings and documents (4 hard copies, 1 electronic copy & 1 as-built copy of each drawing/document), for firefighting/fire protection system, design basis, general arrangement/layout drawings of fire water/ spray system/ sprinkler system/fire extinguishers/fire fighting equipments, design adequacy calculations, material specifications, material take-offs (linewise/consolidated), supplier drawings/specifications, inspection test plans, test certificates, spares list, etc. shall be submitted by the Contractor for review/approval/information of Owner/PMC/ Statutory authorities.

 All rights reserved

THIS DRAWING IS THE PROPERTY OF PROJECTS & DEVELOPMENT INDIA LIMITED (PDIL) AND NOT TO BE COPIED OR REPRODUCED OR SHOWN TO THIRD PARTIES WITHOUT THE WRITTEN PERMISSION OF PDIL.

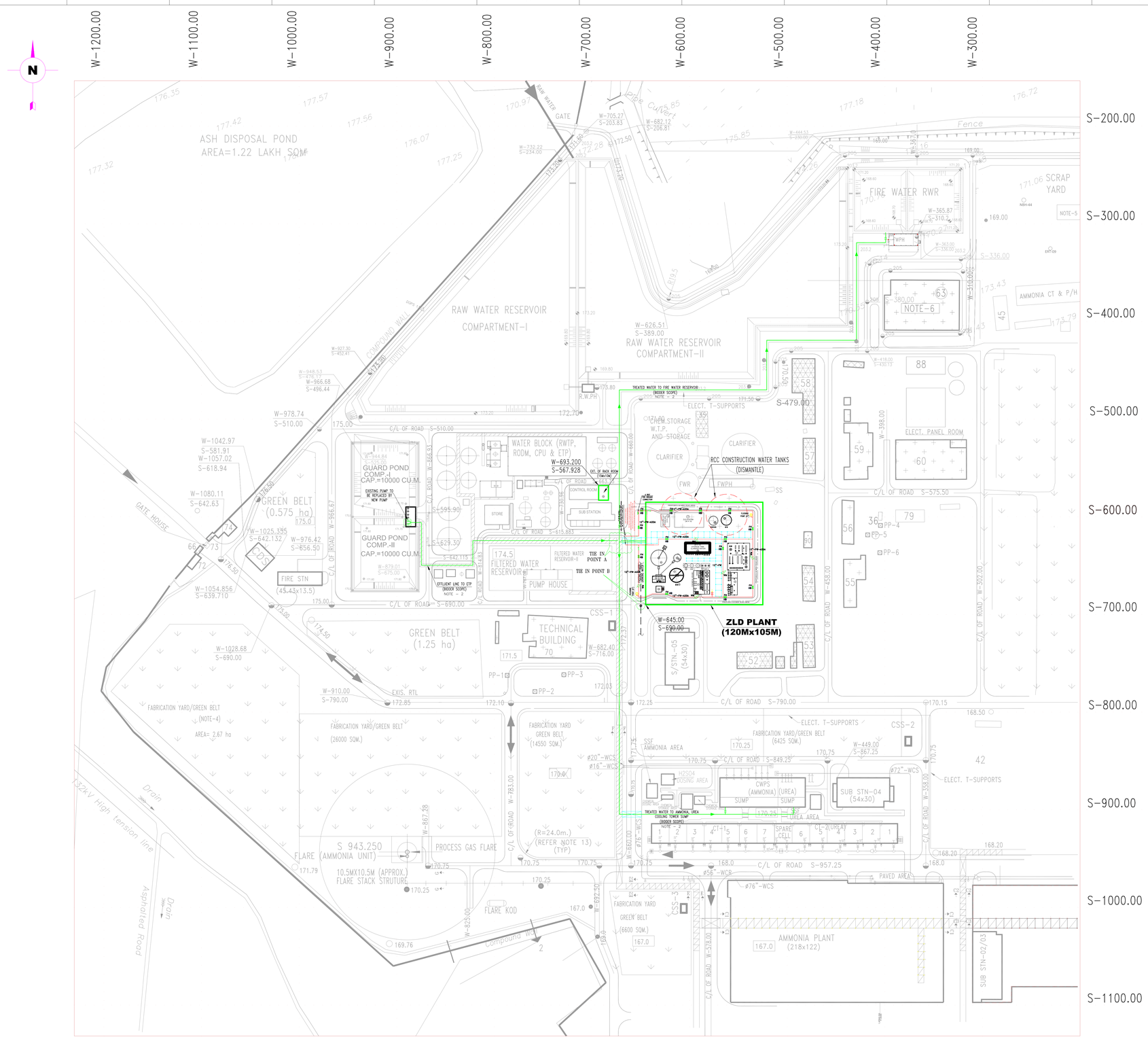

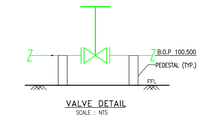

VALVE DETAIL
SCALE : NTS

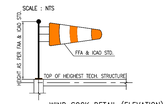

WIND SOCK DETAIL (ELEVATION)
SCALE : NTS

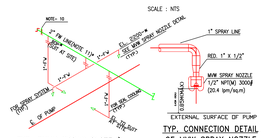

TYP. PUMP SPRAY SYSTEM)
SCALE : NTS

TYP. CONNECTION DETAIL OF MVW SPRAY NOZZLE
SCALE : NTS

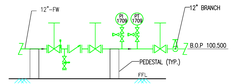

DETAIL-Z
SCALE : NTS

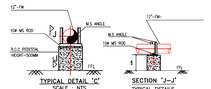

TYPICAL DETAIL "C"
SCALE : NTS

SECTION "J-J"
TYPICAL DETAILS
SCALE : NTS

TP - A	SERVICE TYPE	SIZE	COORDINATE / ELEVATION	
1	LP STEAM	*	S-625, W-680	EL. - 4.5 Mtrs.
2	COOLING WATER SUPPLY	*	S-625, W-680	EL. - 3.0 Mtrs.
3	COOLING WATER RETURN	*	S-625, W-680	EL. - 3.0 Mtrs.
4	INSTRUMENT AIR	2"	S-625, W-680	EL. - 4.5 Mtrs.
5	SERVICE WATER	3"	S-625, W-680	EL. - 4.5 Mtrs.
6	PLANT AIR	2"	S-625, W-680	EL. - 4.5 Mtrs.

TP - B	SERVICE TYPE	SIZE	COORDINATE / ELEVATION	
1	DRINKING WATER	2"	S-691, W-650	EL. - 0.5 Mtrs.

TP - C	SERVICE TYPE	SIZE	COORDINATE / ELEVATION
1	FIRE WATER	*	FROM NEAREST HEADER

S.NO.	EQUIPMENT LIST
01	STILLING CHAMBER
02	HRSCC-I
03	SLUDGE COLLECTION SUMP
04	THICKENER FEED PUMPS
05	CENTRIFUGE BUILDING (CENTRIFUGE)
06	HRSCC-II
07	SLUDGE THICKENER
08	CENTRIFUGE FEED PUMP
09	CLARIFIED WATER STORAGE TANK - I
10	DMF- I
11	DMF- I I
12	CHEMICAL HOUSE
13	UF / RO SKID
14	PERMEATE WATER STORAGE TANK
15	RO PERMEATE WATER STORAGE TANK
16	RO-II REJECT WATER STORAGE TANK EVAPORATOR FEED TANK
17	ZLD SYSTEM
18	CRYSTALIZER SALT STORAGE AREAFIRE WATER
19	CONTROL ROOM

NOTES : -

1. ALL DIMENSIONS ARE IN MM UNLESS OTHERWISE SPECIFIED.
2. PROPER DRAINAGE SYSTEM SHALL BE MADE FOR QUICK DISPOSAL OF USED WATER.
3. EASY ACCESS OF ISOLATION VALVE SHALL BE PROVIDED.
4. ALL THE DELUGE VALVE SHALL BE LOCATED IN DELUGE SHED & SHALL BE MINIMUM 15M AWAY FROM THE EQUIPMENT TO BE PROTECTED.
5. ALL FIRE WATER LINE SHALL DESIGNED AND CONSTRUCTED AS PER PROJECT JOB SPECIFICATION FOR DESIGN MATERIAL SELECTION AND CORROSION CONTROL PHILOSOPHY.
6. ALL FIRE WATER LINES, ASSOCIATED VALVES AND FITTINGS SHALL BE AS PER PIPING MATERIAL SPECIFICATION.
7. HYDRANTS SHALL BE READILY ACCESSIBLE FROM ROADS AND LOCATED IN SUCH A WAY THAT THEY CANNOT BE DAMAGED BY ROAD TRAFFIC. IF NECESSARY, HYDRANTS SHOULD BE PROTECTED BY GUARD SYSTEMS.
8. HYDRANTS SHALL BE LOCATED AT LEAST 1M AWAY FROM THE EDGE OF THE ROAD AND READILY ACCESSIBLE FROM ROADS.
9. HYDRANTS SPACING ALONG THE RING MAIN SHALL NOT BE MORE THAN 30M FOR PROCESS AND 45M ELSEWHERE IN THE PLANT.
10. THE RING MAIN SHALL BE FITTED WITH ISOLATION VALVES AT EVERY 300 METERS IN MAXIMUM AND AT EVERY GRID JUNCTION. ONLY CARBON STEEL VALVES SHALL BE USED AS ISOLATION VALVE.
11. ABOVE GROUND FIRE WATER PIPING SHALL BE PAINTED AS PER PAINTING SPECIFICATION PAINT SHALL BE AS PER NIT.
12. * INDICATES HOLD

LEGENDS :-

- PROPOSED NEW FACILITY
- TO BE DISMANTLE
- PROPOSED NEW PIPE RACK BRIDGE
- PROPOSED NEW PIPE RACK
- ABOVE GROUND FIRE WATER LINE
- UNDER GROUND FIRE WATER LINE
- DOUBLE HEADED HYDRANT VALVE
- WATER MONITOR
- GATE VALVE
- FIRE BRIGADE CONNECTION
- EXTINGUISHER
- HOSE BOX
- DELUGE VALVE
- FLUSHING POINT

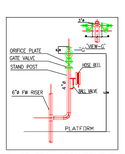

TYPICAL GENERAL ARRANGEMENT OF DOUBLE HEADED HYDRANT WITH HOSE BOX (AT PLATFORM)
SCALE : NTS

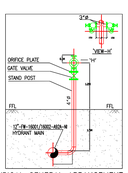

TYPICAL GENERAL ARRANGEMENT OF DOUBLE HEADED HYDRANT WITH HOSE BOX (FROM UNDERGROUND)
SCALE : NTS

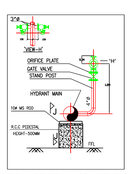

TYPICAL GENERAL ARRANGEMENT OF DOUBLE HEADED HYDRANT WITH HOSE BOX (ABOVE GROUND)
SCALE : NTS

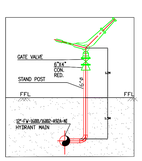

TYPICAL GENERAL ARRANGEMENT OF WATER MONITOR (FROM UNDERGROUND)
SCALE : NTS

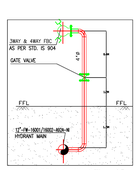

TYP.CONNECTION DETAIL OF FIRE BRIGADE CONNECTION
SCALE : NTS

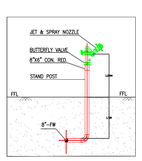

TYPICAL GENERAL ARRANGEMENT OF HIGH VOLUME LONG RANGE MONITOR
SCALE : NTS

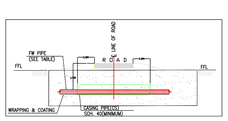

TYPICAL STANDARD DETAIL OF ROAD CROSSING
SCALE : NTS

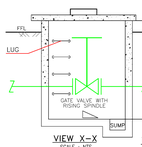

VIEW X-X
SCALE : NTS

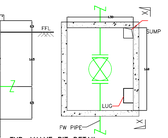

TYP. VALVE PIT DETAIL
SCALE : NTS

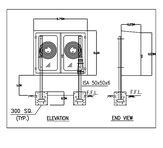

TYPICAL STANDARD DETAIL OF HOSE BOX
SCALE : NTS (NOTE 7)

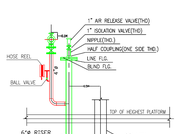

TYPICAL STANDARD DETAIL OF RISER TOP
SCALE : NTS

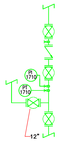

VIEW-Y
SCALE : NTS

REV.	DATE	DESCRIPTION	PPD.	CKD.	APPD.
0	11.08.2023	ISSUED FOR TENDER	ANIL	ARVIND	SKM

CLIENT : RAMAGUNDAM FERTILIZERS AND CHEMICALS LIMITED (RFCL), TELANGANA, INDIA

REV. 0
SHEET 1 OF 1

PROJECT : IMPLEMENTATION OF ZERO LIQUID DISCHARGE (ZLD) UNIT AT RAMAGUNDAM PLANT

SCALE : 1: 1500
DRG. No.: PC211-7611-921-0002

TITLE : CONCEPTUAL FIRE HYDRANT LAYOUT OF ZLD PLANT

FILE : PC211-7611-921-00012_Rev.0

PROJECTS & DEVELOPMENT INDIA LTD. NOIDA

Bidder shall provide the following items complying specifications of tender & as mentioned below:

S.No.	Item	Specification	Quantity	Remarks
1	Cold/low temperature protective suit.	Design leak proof with material to withstand minus 45 degC for 30 minutes minimum, without crack/damage. Colour shall be cherry/brownish red/yellow suitable for use in LPG, liquid ammonia.	01 set	
2	Fire Proximity Suit	UL listed	01 set	
3	PVC suit		02 sets	
4	Leak Control Kit : Consisting of 1 no each of leak arresting pad, leakage control of external pipes, internal pipes, large external pipes up to 8 inch, drums / containers leakages, general purpose leakages, large hole leakages in storage tanks.		01 set	
5	Oil Product Clean up Chemical : - Broom(5 inch dia , 3 mtr. Long) : 6 nos. - Broom(3 inch dia , 3 mtr. Long) : 6 nos. - Granular particles to absorb Oil : 20 Kg		2 sets	
6	Oil Spill Dispersant (Water Based) along with hand held spray nozzle. Dispersant : 40 litre Spray Gun with back pack		1 set	

 All rights reserved

S.No.	Item	Specification	Quantity	Remarks
7	Non Sparking Tools One set consisting of : - Shoe handle brush -01 no - 9" Crate opener -01 no - 16oz Claw hammer with Fiberglass handle -01no. -Common knife $5^3/_4$" Blade : 1 no $10^3/_4$" OAL, -12" Groove joint plier, -7" Long nose pliers with cutters, -8" Combination Pliers, -Deck scraper, -1 1/2" Blade X 15"Long, -Spray booth scraper, -3" blade X 9 ¼" Long, -Std Screwdriver – 5/16" Tip, -6" Blade, - 3" Phillips Screwdriver, -12" Tin Snips, -8" Adjustable Wrench, -12" Adjustable wrench, -14" pipe Wrench (Aluminium), -12" Bung Wrench (Fits 3/4" X 2")		01 set	
8	Self-contained Breathing Appartus Set (45 minute duration) with a spare cylinder (filled-up) & accessories	IS: 10245 (Part-2).& CCOE approved	1 set	
9	Fire escape mask / filter type emergency respirators	IS: 8523	02 sets	
10	Flame Proof Search Light (Rechargeable safety hand held torch): Rechargeable type suitable for Explosive Environment.	PESO Certified	02 no	
11	Mega Phone Explosion Proof Portable battery operated Public Address System with 1 loud speaker with a range of 1 KM in still air and 500 M in noisy areas		02 set	.
12	Hand Siren With Stand : Approx. range of 1.6 KMS	IS:6026	1 no	
13				
14	Fireman Axe	Forged Axe head, Insulated Handle, IS-926	02 no	
15	Fibre Glass First Aid Box (with Medicines & other Items)		02 set	

All rights reserved

S.No.	Item	Specification	Quantity	Remarks
16	Resuscitator : Manually operated for artificial respirators consisting of adult size nose, mouth, face plate, air bulb with oxygen inlet connection, non- return, non- breathing human valves and first aid charge packed in a plastic bag	UL listed	01 no	
17	Water jel blanket	UL/FM listed	01 no	
18	Folding Stretcher : Size 6 feet X 3 feet with tying belts & blanket.	Heavy duty Aluminium, vinyl coated nylon, BIS mark, Load 160kg min.	01 no	
19	Safety Helmet	IS-2925(Latest amendment) & EN-397 Certified, water proof, high impact, heat & chemical resistant, HDPE, ratchet fit, size 51-62 cm. with Inner head band LDPE, ventilated sweatband absorber, coloured "company name" logo.	10 no	
20	Safety Shoes	Leather upper with rubber /synthetic sole & steel cap, thermal resistant, skid resistant	10 pairs	
21	Safety Goggles	IS-5983, chemical & heat resistant	10 no	
22	PVC Hand Gloves	IS: 6994	10 pairs	
23	Nitrile Hand Gloves	CE/EN	10 pairs	
24	Electrical resistance, Insulating Rubber Hand Gloves		10 pairs	
25	Explosimeter	UL/FM listed & PESO approved	02 nos.	
26	Wind socks		02 nos	
27	Sand buckets (9 Ltr. capacities) filled with sand along with scoops, rain protection and mounted on structural support stand (each with at least 3 sand buckets).	IS: 2546	04 set	
28	Red/Green flag each colours		10 no. each colours	

Note:

1. Above mentioned quantity are minimum.

 All rights reserved

TECHNICAL SPECIFICATION OF PERSONAL PROTECTIVE EQUIPMENT

PLANT: RAMAGUNDAM FERTILIZERS AND CHEMICALS LIMITED

PROJECT: IMPLEMENTATION OF ZERO LIQUID DISCHARGE (ZLD) UNIT

AT

RAMAGUNDAM FERTILIZERS AND CHEMICALS LIMITED (RFCL),

TELANGANA, INDIA

 All rights reserved

1.0 Safety Helmet

Safety helmets are made of fibre glass shall be supplied and shall confirm to IS:2925 (Latest amendment) & EN-397. These shall be moulded seamless in one piece from natural reinforced fibre glass/polyester resin, which can withstand heavy impact. The helmet shall be made of material highly impact, heat & chemical resistant, high dielectric strength and shall also have better quality abrasion resistance and higher softening temperature. The shell structure of the helmet shall be designed to provide extra strength and toughness. The helmet shall have sweat band and adjustable head band and shall bear IS approval. The colour of the helmets shall be decided at the time of placement of order.

2.0 Safety Goggles

A device worn over the eyes & held in place by a headband used for protecting the eyes & eye sockets from flying particles & injurious radiations, chemical & heat resistant and shall conform to IS-5983.

3.0 Stretcher with Blanket

Stretcher (size 6 feet X 3 feet with tying belts & blanket) shall be supplied and shall conform to IS:4037. Material of the stretcher and other related accessories should be as per the IS standard of practice.
Heavy duty aluminium poles for easy handling and heavy duty, vinyl-coated nylon covers that resist stains and will not absorb body or bodily fluids

4.0 Fiber glass First Aid Box with Medicines

Fiber glass First Aid Box portable type with locking arrangement and compartmentalised storage facility and containing the required first aids as below:

- First aid for cuts, burns, sprains (instant relief sprays) - 1 each.
- Antiseptic lotion, liquids (Dettol / Savlon tincture iodine) - 1 bottle
- Pain relieving medicines, anti vomiting medicines etc. - 2 stripes of 10 each.
- 500 mg Paracetamol I.P - 100 tablets.
- Anti snake serum bottle - 1 No.
- Band-Aids - 20 pcs.
- 25 gms of Soda Bi-Carb. I.P. - 1 pkt.
- Wound dressing small (for fingers) - 12 pcs.
- Wound dressing medium (for hands and feet) - 6 pcs.
- Wound dressing large (for body) - 6 pcs.
- Burn dressing large (for body) - 6 pcs.
- Absorbent cotton wool 13 gms each - 6 pcs.
- Dressing arrangements (scissors / blade etc.) - 1 set.

 All rights reserved

- Eye pad with bandage in separate pkt. - 08 pcs.
- Tourniquet cotton with belt & buckles. - 1 No.
- Polythene wash bottle 500 c.c. - 1 No.
- Book of instruction on first aid to injured - 1 No.
- Copy of First Aid Leaflet issued by DG FASLI – 1 No.

5.0 PVC Hand Gloves

Acid alkali proof PVC hand gloves made of superior quality PVC in yellow colour. The fingers and palm should be embossed/ ribbed for better grip. Palm size should be 9" and overall length 14". The gloves should be confirming to IS: 6994/1973(part-ii).

5.1 Nitrile Hand Gloves

CE Marked fully Nitrile rubber hand gloves (In pair) shall have inside soft cotton flocked lining. It shall be able to resist Acid, alkali & solvent while providing solid protection against snags, abrasion, puncture & cuts. Nitrile Rubber hand glove should meet requirement of EN-388 & EN-374.The overall length of the Gloves shall not be less than 12 Inches (from middle finger to end of the sleeve).

5.2 Electrical resistance, Insulating Rubber Hand Gloves in pair (one for Right Hand, one for Left Hand.)- 1100 Volts

1. Four Fingers and One Thumb
2. MAKE: CATU / Honeywell / Oberon / SICAME or equivalent
3. Maximum voltage of use A.C volts: 1000 Volts (rms)
4. Class - 0
5. Size: 9
6. Type: Gauntlet type
7. Max thickness (approx.): 1.6 mm
8. Construction: Seamless
9. Standard: IEC 60903
10. Category: RC
11. Tested by authorized Government Test houses / NABL accredited LAB and relevant test certificate / Batch certificate with hand gloves serial number to be furnished with the material.
12. Made from specially compounded latex or equivalent for complete insulation & totally shock proof.
13. Test certificate of the suplied item to be furnished along with the supply.
14. Packed in sealed plastic bag.
15. The gloves shall be marked indelibly at the back-
    A) Size, class & category of gloves
    B) Month and year of manufacturing
16. Following tests will be conducted under inspection of TPIA :

 All rights reserved

A) Leakage current Test
B) Tensile strength and elongation at break
C) Resistance to mechanical puncture
D) AC Proof Test
E) Flame retardancy Test

5.2.1 Electrical resistance RUBBER INSULATING HAND GLOVES in pair (one for Right Hand, one for Left Hand.)- 36 KV (rms)

1. Four Fingers and One Thumb
2. MAKE: CATU / Honeywell / Oberon / SICAME or equivalent
3. Class - 4
4. Max. Voltage of use A.C volts: 36 KV (rms)
5. Size: 10
6. Type: Gauntlet type
7. Max thickness (Approx.): 4.2 mm
8. Construction: Seamless
9. Confirming to IEC 60903
10. Category: RC
11. Tested by authorized Government Test LAB / NABL Accredited LAB and relevant test certificate / Batch certificate with hand gloves serial number to be furnished with the material.
12. Made from specially compounded latex or equivalent for complete insulation & totally shock proof.
13. Technical catalogue and test certificate of the offered item to be furnished along with the offer.
14. Packed in sealed plastic bag.
15. The gloves shall be marked indelibly at the back-
    A) Size, class & category of gloves
    B) Month and year of manufacturing
16. Following tests will be conducted at ERDA
    A) Leakage current Test
    B) Tensile strength and elongation at break
    C) Resistance to mechanical puncture
    D) AC Proof Test
    E) Flame retardancy Test

6.0 Portable Explosive Meter cum Oxygen Meter (Explosimeter)

S.N	Particulars	Specification
1.	Use	Able to measure LEL (In Inert atmosphere) and oxygen in zone 0 area.
2.	Type	The metering unit shall be microprocessor based. It shall be suitable for use in open as well as confined space for one hand operation and rugged with casing of protective rubberized over-mold.

 All rights reserved

3.	Sensor	Combustible (LEL) sensor- IR type Oxygen sensor: Electro-chemical type. Sensors shall be replaceable type.
4.	Ambient Condition	0°C to 50°C & humidity: up to 90% RH(non-condensing). (Locations e.g Leh/ Ladakh etc. with extreme weather conditions may decide ambient conditions as per site requirement)
5.	Housing	Minimum IP65 or Better. IP rating should also be tested & certified by accredited agencies like FM/UL/CENELEC/BASSEFA/ATEX/CIMFR/IEC etc.
6.	Area Of Use	The detector shall be intrinsically safe for use in hazardous area classification conforming to Class I, Division I, Group A, B, C & D or Zone - 0, Group-IIA, IIB & IIC, having certified for use by accredited agencies like FM/UL/CENELEC/BASSEFA/ ATEX/CIMFR/IEC etc. and PESO approval at the time of supply of material.
7.	Range	Combustible Gases: 0-100% LEL O_2 : 0 – 25% by Vol. (Min.)
8.	Sampling Pump	Each instrument shall be fitted with motorized pump with audio and visual low flow alarm.
9.	Remote Sampling Accessories	Minimum 10 feet long sampling hose and sampling probe equipped with quick connect device shall be supplied along with instrument with suitable filter.
10.	Alarm	Minimum 85 Decibel audible alarm at 30 cm & bright red LED flashing visible alarm with vibration. Two levels of alarms for each gas sensed and low battery as minimum. Set points shall be adjustable over entire range.
11.	Battery	Rechargeable Battery (NiMH / Li-ion) shall be suitable for minimum 8 hrs. duration (with pump). Charger operable with 230V+ 5%, 50 Hz, AC supply shall be supplied with each instrument.
12.	Size & Weight	Weight shall not exceed 1Kg. (Including Battery & Sampling pump).
13.	Calibration	Frequency Shall be as per OEM recommendation or once in six month whichever is earlier. Calibration shall be easily performed using instrument's pushbuttons no other special tools will be required. Instrument should show calibration due date. Minimum 4 No calibrations within warranty period to be carried out by OEM or its authorized representative.
14.	Accessories	The instrument shall be supplied with necessary calibration cup/adaptor and calibration tubing to facilitate calibration locally.
15.	Display	Self-illuminating back-light digital display.

 All rights reserved

16.	Fast Response	Maximum 30 Sec. to reach to 90% of measured value The above response time shall be with 10 feet long sampling hose.
17.	Hands Free Operation	The unit shall also have a suitable arrangement for hands free operation.
18.	Rf Protection	Shall be compliant with EMC directive against EMI/RF interferences.
19.	Accuracy	+/- 2% of measured value
20.	Maximum Resolution	Combustible gas: 1.0% LEL O_2 : 0.1 % by Vol
21.	Performance Guarantee	Minimum 2 years including sensors. The vendor shall guarantee the design, material, workmanship and the performance of the unit for a period of 24 months from the date of supply. Any defect, faulty workmanship or operational defects found during this period shall be rectified by the vendor without any extra cost of Owner/ PMC. Suitable instrument like BG etc shall be furnished by the vendor in line with tender conditions against performance guarantee.
22.	Documentation	Vendor shall be OEM or its authorized supplier having valid authorization from OEM. All other details shall be as per ANSI/ISA 12.03.01(Combustible gases) and ANSI/ISA 92.0.01 to 92.06.01 or equivalent IEC standards.
23.	Inspection, Testing And Performance Parameter	Owner/ PMC reserve its right to get material tested at a lab of repute or vendor to submit third party inspection certificate along with all accessories by Owner/ PMC approved third party inspection agency as per the requirement of Technical Specification. In the event of non-conformity with specifications, Owner/ PMC shall be at liberty to take action as deemed appropriate at its sole discretion. Prior to dispatch of the material from vendor's / manufacture's place the following inspection and tests shall be carried at the vendor place to complete satisfaction of Owner/ PMC representative or his authorized third-party agency without any extra cost to Owner/ PMC for: • Visual inspection of Explosi & Oxygen Meter (Explosimeter) to ensure no apparent damage or deficiency. • Examination of documents / certificates / test reports/ instructions/ Guidelines.

 All rights reserved

		• All consumable required for inspection and testing work shall be arranged by vendor at his own cost. • Vendor shall arrange all facilities to carry out inspection and testing. Details of field demonstration: Owner/ PMC at its discretion may ask the vendor for field demonstration/ Training for end users at a location specified by Owner/ PMC.
24.	Packing	Material should be packed in OEM packing.
25.	Damage Of Material	Any damage and / or manufacturing defects to the supplied material will not be accepted.

NOTE:

- The default measurement of LEL shall be for Methane. The detector is calibrated to Methane.
- During supply, vendor shall submit operational & maintenance manual, warranty certificate and TPI report along with each instrument.
- Vendor shall supply calibration certificate by OEM for all the sensors. The calibration certificate should contain identification numbers of the sensors & instruments supplied by the OEM.
- Vendor shall clearly indicate the point-wise acceptance/deviation against the above specification in the offer.
- Vendor shall arrange to rectify the defects within two weeks from reporting of the defect at site/owner's premises specified by the owner without any extra cost to owner during warranty period.
- Vendor shall submit the declaration on the cross-sensitivity of sensors with other gasses of concern.
- Owner/ PMC authorized Inspection Agency shall inspect the material before dispatch of the material for quality assurance, testing & performance evaluation as per technical specification.

7.0 Aluminised Fire Proximity Suit.

7.1 General

The suit shall be made up of aluminised glass fabric. It shall be stitched with fire retardant Kevlar yarn or equivalent threads. The material used for the suit, shall not chemically react with water and shall not show any tendency to absorb oil, grease, petrol etc.

The suit shall include hood, coat, pants, boots, mitts and pouch suitable for accommodating BA set. Shoes shall be of standard size with proper insulation and leather lining with non-skid type sole. Metal zip fasteners shall be provided for easy donning and removal of the suit.

 All rights reserved

No discomfort shall be experienced while climbing a ladder, in running while carrying a pressurised hose pipe or first aid box. The suit shall get dried easily. The complete set with maintenance manual shall be packed in a strong case / box.

7.2 Shelf life : Minimum 10 years.

7.3 Donning time : 1.5 minutes.

7.4 Protection Level : Outer shell fabric shall withstand a radiant temperature of 2000 deg.F approx.

7.5 Size : Regular size suitable for a fireman of height 5'6" to 6'2" approx.

7.6 Certification : The fabric of the fire proximity suit shall confirm to the any one of the following standards / specifications
European Standard (EN)
Listed by Underwriters
Laboratories UL 214.

8.0 Resuscitator

The Resuscitator should be as per WHO specifications or UL listed. The resuscitator shall be an intermittent positive pressure respirator type for artificial respiration with a human non-return, non- rebreathing valve. The resuscitator shall be of bag type, manually operated and shall be packed in a transparent bag along with a first aid chart displaying its operation. The resuscitator shall be suitable to be used by an adult person.

9.0 Electrically Operated Siren (Range - 3 Kms)

The general requirements, 3 phase electric motor, siren, heads, starter for on/off operations, without warbling relay, acoustic power shall comply with IS:1941 (Part I)/1976. The Siren shall be approx. range of 3 KMS. It shall be suitable anywhere in the country. Siren shall be horizontal complete with mounting. The electric motor shall be totally enclosed with greased sealed ball bearing and shall conform to IS:325.

10.0 Hand Operated Siren (Range - 1.6 Kms)

The shape, components, material, design and construction shall comply with IS:6026-1970. It shall have portable stand as per IS:6026. The Siren shall be approx. range of 1.6 KMS.

11.0 Low Temperature Gas Protective Suit Suitable for Handling LPG, Liquid ammonia, Propane and Other Toxic Hazardous Gases.

1.	MATERIAL OF CONSTRUCTION	:	Polyamide fabric coated with viton / silicon

 All rights reserved

2.	SEAMS	:	Sewn with chemical resistance special thread to ensure leak proof design.
3.	SEALANT	:	Shall be used for the suit for achieving chemical resistance.
4.	GLOVES	:	Shall be made up of the same material used for the suit, and they shall be covered with neoprene as an extra protection. Gloves shall be fixed with the wrist.
5.	COLOUR	:	Cherry / Brownish Red / Yellow
6.	LOW TEMPERATURE WITHSTANDING CAPABILITY	:	The suit shall be able to withstand a low temperature of minus 45 deg. centigrade without any physical damages whatsoever
7.	APPROVAL	:	The Vendor shall enclose latest Test Certificates duly approved by DIFR / GIRDA, clearly indicating the followings: - That the gloves can withstand a temperature of minus 45 deg C for a period of 30 minutes. - No cracking, blistering was noticed on the suit after the low temperature test.

12.0 Water Jel Blanket

Water jel blanket (Hydro jel blanket) to be used in case of fire burns shall be supplied the minimum size should be 2.5mX1.5m. It should have necessary approval from any of these agencies (UL of USA, FM of USA, LPCB of UK, and VDS of Germany). Blanket shall be woven out of new wool, impregnated with sterile water based gel. Blanket shall be capable to protect the user from heat, smoke and to provide to the burn victim. The water gel blanket shall bear approvals of IS/DGMS/DIFR or equivalent.

The wool carried is capable of absorbing upto 13 times its own weight. The Water Jel Blanket shall be packed in good quality poly-jar / canister. Water Jel Blanket shall be having 5 years usable life.

13.0 Fire escape mask / filter type emergency respirators

Emergency respirator is a self rescue hood, ideal for escape from room and buildings contaminated with toxic fumes and gases created by fire or accidental pollution. It should be as per IS: 8523.

 All rights reserved

14.0 Self Contained Breathing Apparatus (45 Minutes)

Self-contained breathing apparatus (SCBA) suitable for fire fighting, rescue operation in toxic and oxygen deficient atmospheres. The equipment consists of compressed air cylinder, full face wide vision mask (with inner mask), pressure reducer, pressure gauge, low pressure warning whistle, exhalation valve, speech diaphragm, comfortable shoulder harness and light weight back plate, straps, buckles and easy to wear.
The Cylinder shall be capable to operate for 30 minutes. The Cylinder and Valve shall have CCOE approval. BA Set shall be confirming to IS: 10245 (Part-2). One number of spare cylinder shall also be supplied

15.0 PVC suit

It shall be used in handling acid and alkali. Chemical protection clothing can be manufactured from a special grade heavy duty high visibility yellow PVC. The material shall have excellent chemical resistance, high tensile, tear & elongation strength, abrasion, ozone as well as heat resistance. The clothing seam shall be welded by high frequency electrical heating.

16.0 Red and Green Flag

Red and green flag suitable for the fire drill operation shall be supplied. Handle should be made of aluminium. The flag should have minimum of 0.5m x0.30m dimensions.

17.0 Fireman Axe

Forged Axe head, Insulated Handle, IS-926.

18.0 Flame Proof Search Light (Rechargeable safety hand held torch)

S.N	Particulars	Specification
1.	Description	Rechargeable Hand-Held Torch
2.	Power	Rechargeable without removing batteries & Charging in Safe area.
3.	Battery Run Hours	Not less than 3 hours after complete one cycle charge. (To be certified by OEM)
4.	Lumens	Not less than 130 lmn. When measured at a distance of 1-2 Metres for major light (Lumens of the torch to be certified by OEM and NABL/ Govt. accredited Lab.)
5.	Clip/Strap	Strap/ clip
6.	Weight with battery & fittings.	Max. 400 Grms.
7.	Certification	Intrinsically safe for use in hazardous area classification conforming to Zone ‘0’ of Gas Group IIC hazardous area Certified by PESO.
8.	IP	Ingress Protection- Min. IP65 or better (To be certified by OEM along with relevant test certificate)

 All rights reserved

S.N	Particulars	Specification
9.	Housing/ Body	Housing body should be made of material of Anti-static, high impact properties
10.	Lens	Polycarbonate
11.	DROP Test	2 Meter to be certified by OEM and NABL accredited Lab./ Govt. approved Lab.
12.	Battery with Compatible Charger	Rechargeable, Li-ion / NiMH. Charger operable with 230V ± 5%, 50 Hz± 3% AC supply and compatible charger shall be supplied with each torch.
13.	Light Source	LED only
14.	Marking	As a minimum the product shall have following markings • Marking towards intrinsically safety of the product. • Name of the Manufacturer
15.	Warranty	Minimum one year including battery and battery charger. The vendor shall guarantee the design, material, workmanship and the performance of the unit for a period of 12 months from the date of acceptance at site..
16.	Certification	• A copy of relevant approval including PESO and other documentation along with the offer. • During supply, vendor shall submit operational & maintenance manual, warranty certificate along with each instrument.
17.	Packing	Material should be packed in OEM packing
18.	Damage of Material	Any damage and / or manufacturing defects to the supplied material will not be accepted.

19. WINDSOCKS

LED Illuminated Windsock with heavy duty stainless steel SS-304 Stand.

Made of Stainless Steel SS-304, 360-degree rotating system to rotate the sock to wind

i) LED light of 20 watt of above suitable for outdoor installation, Cable of size 2C, 1 Sq./mm copper of 10 mtr with LED light.
ii) Wind Sock made of parachute polyester double lining 2-layer Combination of fluorescent colour red& white or Fluorescent Orange & Lime green with 25 mm wide reflective tape four rows for night reflection of windsock.
iii) The LED illuminated wind socks frame shall be made of heavy duty SS-304 rod and SS-304 strips with Extended Spokes cage two feet long as per design shown in the photos.
iv) The frame shall be fixed on rotatable pipe stand 32mm height 5 Feet long with pedestal flange.

 All rights reserved

v) Windsock Size: Dia 2 feet × 6 Feet Long made of parachute polyester double lining 2-layer fluorescent colour red & white Combination or Fluorescent Orange & Lime green Combination with 25 mm reflective tape four rows for night reflection.

vi) Windsock shall be fixed with the frame along with red coloured industrial type weather proof Led lights of 20 watt and above1 Sq./mm cable fitted with light of 10mtr per with each set.

vii) The two bearing to be used must be maintenance free and weather proof

20.0 Sand Drum with Scoop

Metal sand scoops with handle of large size manufactured from best quality steel duly painted.

 All rights reserved

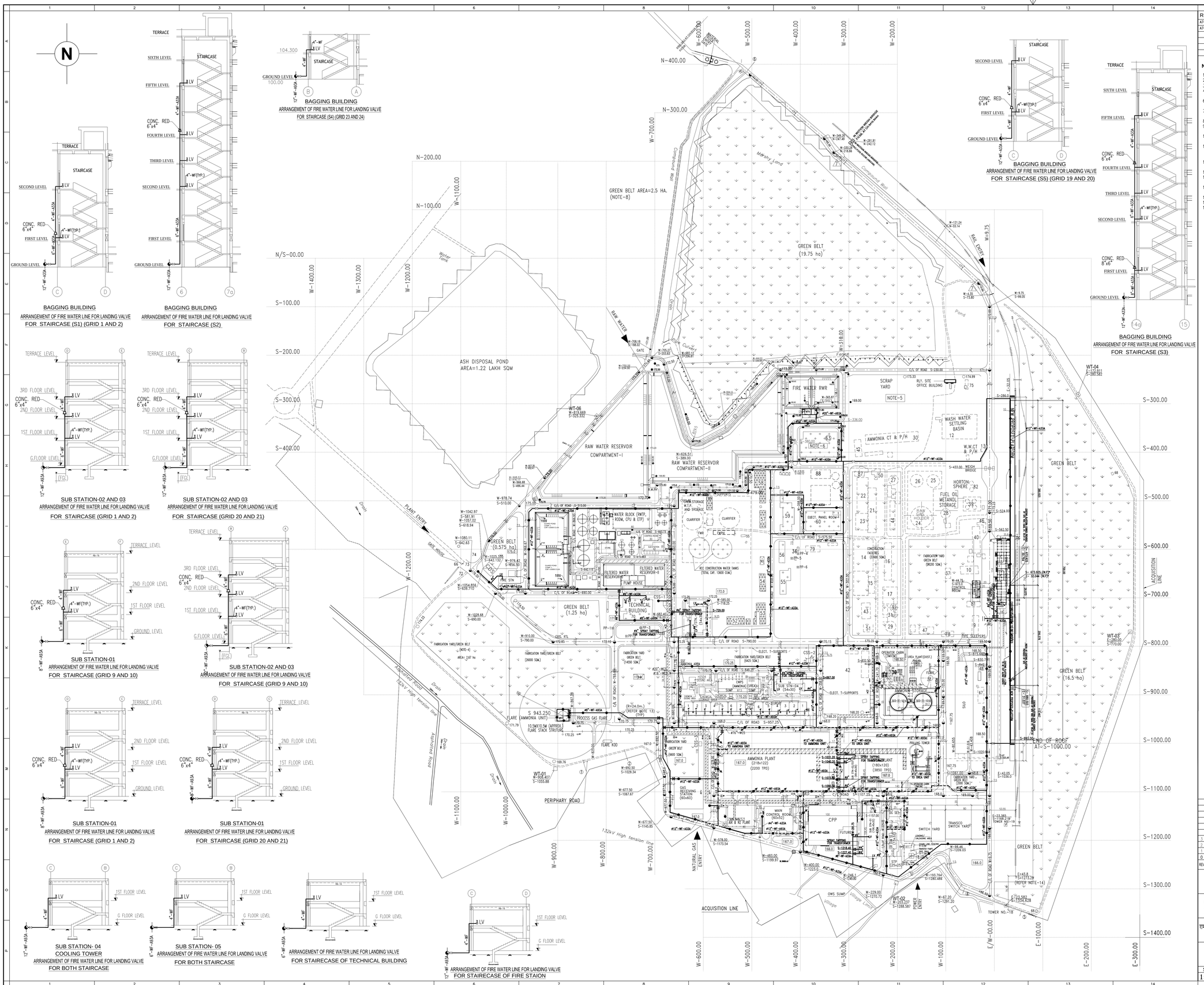

REF. DWG. NO.	REFERENCE DRAWING TITLE
A747-000-17-44-0001	OVERALL PLOT PLAN
A747-000-17-44-0101	FIRE WATER LAYOUT (CONCEPTUAL)

NOTES :-

1. ALL DIMENSIONS AND CO-ORDINATES ARE IN METER.
2. ISOLATION VALVES IN THE FIRE WATER NETWORK SHALL BE OF GATE VALVE.
3. VALVES IN U/G PITS SHALL BE WITH EXTENDED SPINDLE FOR OPERATION.
4. MINIMUM COVER IN OFF-SITES SHALL BE 1.0M, MINIMUM COVER BELOW APPROACH ROADS SHALL BE 1.5M.
6. ABOVE GROUND FIRE WATER LINES SHALL BE SUPPORTED ON RCC SLEEPERS AND PAINTED AN FIRE RED AS PER PAINTING SPECIFICATION.
7. FIRE WATER LINES INSIDE & AROUND UNIT AREAS SHALL BE LAID UNDERGROUND.
8. ALL UNDER GROUND LINES SHALL BE 3LPE COATED.
9. ALL THE UNDER GROUND PIPING SHALL BE PROVIDED WITH CORROSION PROTECTION COATING AS PER SPECIFICATION.
10. FIRE WATER LINES IN PAVED AREA SHALL BE LAID IN RCC TRENCHES FILLED WITH SAND AND WITH REMOVABLE PRECAST COVER.
11. HOOK-UP CONNECTION FOR FOLLOWING SHALL BE DECIDED DURING DETAIL ENGINEERING AND SHALL BE SHOWN IN AREA DRAWING.
    i) FOAM SYSTEM FOR TANKS.
12. CONSTRUCTION OF FIRE WATER LINES SHALL BE CARRIED OUT AS PER AREA DRAWINGS.
13. EXPANSION LOOPS SHALL BE CARRIED OUT AS PER AREA DRAWINGS.
14. LOCATION OF HYDRANTS & MONITOR SHALL BE SUITABLY MARKED FOR COMPLETE COVERAGE IN THE AREA DRAWINGS.
15. LONG RANGE MONITOR SHALL BE SUITABLY PROVIDED DURING DETAIL ENGINEERING.
16. MONITOR AROUND THE TANK FARM AREA SHALL BE WATER MONITORS.
17. HOSE BOXES WITH ACCESSORIES SHALL BE PROVIDED AT ALTERNATE HYDRANTS.
18. PMS FOR UNDERGROUND FIRE WATER HEADER SHALL BE A93A AND PMS FOR ABOVE GROUND FIRE WATER HEADER SHALL BE A33A.

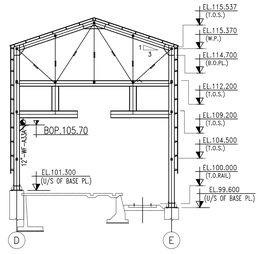

TYP. DETAIL OF PORTAL PR
FOR LOCATION OF FIRE WATER HEADER

MTO OF OFFSITE FIRE WATER SERVICE

DESCRIPTION	MTO (NOTE-19)
20"-WF-PIPE	25 M
12"-WF-PIPE	9600 M
8"-WF-PIPE	525 M
HYDRANT	166 NOS.
MONITOR	22 NOS.
12" GATE VALVE	62 NOS.
8" GATE VALVE	7 NOS.

NOTE-ACTUAL MTO SHALL BE TAKEN AS PER LATEST CIVIL GAD.

LEGENDS:

U/G	UNDER GROUND
A/G	ABOVE GROUND
	FIRE WATER LINE (U/G)
	FIRE WATER LINE (A/G)
	DOUBLE HDEADED HYDRANT
	WATER MONITOR
	VALVE
	VALVE WITH PIT
	FIRE WATER LINE IN RCC TRENCH

ø14"-WF-A93A
SPECIFICATION
SERVICE
LINE SIZE

REV.	DATE	REVISIONS	BY	CHKD	APPD	PEMPC
3	26.04.18	REVISED AND REISSUED FOR ENGINEERING	KC	LP	VKG	
2	20.04.17	REVISED AND REISSUED FOR ENGINEERING	SK	LP	VKG	
1	03.10.16	REVISED AND REISSUED FOR ENGINEERING	KGR	LP	VKG	
0	24.06.16	ISSUED FOR ENGEERING	MSR	LP	AK	

इंजीनियर्स इंडिया लिमिटेड (भारत सरकार का उपक्रम) ENGINEERS INDIA LIMITED (A Govt. of India Undertaking)

CLIENT:
RAMAGUNDAM FERTILIZER & CHEMICALS LTD (RFCL)

रामागुन्डम फर्टिलाइजर कोमप्लेक्स परियोजना का पुनरुत्थान	REVIVAL OF RAMAGUNDUM FERTILIZER COMPLEX PROJECT
अग्निशमन जल प्रणाली का विन्यास	LAYOUT OF FIRE WATER NET WORK

SCALE	JOB NO.	UNIT	DIVN.	DEPT.	DWG. NO.	REV.
1:2000	A747	3081	8141	0480	4	3

3-1641-0500 REV.2 A0-1189 x 841

The drawing, design and details given on this format are the property of ENGINEERS INDIA LIMITED. They are merely loaned on the borrower's express agreement that they will not be reproduced, copied, exhibited or used, except in the limited way permitted by a written consent given by the lender to the borrower for the intended use.

यह ड्राइंग, डिज़ाइन और इसमें दिखाई विवरणों को इंजीनियर्स इंडिया लिमिटेड की संपत्ति है। ये केवल उधार लेने वाले के साथ उधार देने वाले द्वारा उपलब्ध कराई गई लिखित सहमति के अनुसार उधार लेने वाले के इरादे से उपयोग के लिए उधार दिए गए हैं। उधार लेने वाले को इन्हें पुनरुत्पादित, प्रतिलिपि, प्रदर्शित या उपयोग नहीं करना चाहिए।

SECTION – 5.3

DESIGN SPECIFICATION - ELECTRICAL

FOR

IMPLEMENTATION OF ZERO LIQUID DISCHARGE (ZLD) UNIT

AT

RAMAGUNDAM FERTILIZERS AND CHEMICALS LIMITED (RFCL), TELANGANA, INDIA

All rights reserved

CONTENT

All rights reserved

LIST OF ATTACHMENTS

Technical Specification No.	Description	No. of Sheets
TS-8028	Electrical Erection, Testing & Commissioning	39
TS-8060	Medium Voltage Switch Boards	18
TS-8080	Sheet Steel Distribution Boards	13
TS-8083	Lighting Sub Distribution Boards	7
TS-8102	Induction Motors	14
TS-8120	Interlocking Sw. Socket and Plug	8
TS-8160	Cables	7
TS-8161	Prefabricated Ladder Type Cable Racks	6
TS-8200	Local Control Stations	9
TS-8201	Junction Box	7
TS-8301	Soft Starter	10
Electrical PDS No.	**Description**	**Sheets**
PDS: E 119	Typical Foundation Arrangement for Panels in Sub-Station	1
PDS: E 120	Typical Foundation Details for HT/LT Circuit Breaker Panels	1
PDS: E 201	Fixing Arrangement of Air Obstruction Light	2
PDS: E 203	Steel Tubular Lighting Pole	3
PDS: E 204	Installation of Electrical Poles	1
PDS: E 206	Installation Arrangement Street Lighting Fixtures	1
PDS: E 207	Details of Bracket Arm for Street Lighting Pole	1
PDS: E 208	Installation Arrangement Area Lighting Fixtures	1
PDS: E 210	Junction Box for Street Lighting Pole	1
PDS: E 211	Installation of Junction Box for Street Lighting Pole	1
PDS: E 212	Typical Installation of Lighting Fixture at Ground Level	2
PDS: E 213	Typical Street Lighting Pole	1
PDS: E 402	Component rating for DOL starter	1
PDS: E 404	Component rating for AC feeders	1
PDS: E 412	Schematic Diagram AC Control Supply through Control Transformer for Switch Boards with bus coupler	1
PDS: E 464	Schematic Diagram Panic Light	1
PDS: E 510	Details of Concrete Cable Trench	1
PDS: E 511	Cable Rack Arrangement in Trenches	1
PDS: E 512	Fabrication Details of Cable Rack in Trench & Duct	1

FORM NO: 02-0000-0021 F2 REV3 All rights reserved

PDS: E 516	Typical Arrangement of Cables buried in slit	1
PDS: E 525	Fixing Arrangement of Perforated Cable Tray (Horizontal Formation Ceiling Supported)	1
PDS: E 526	Fixing Arrangement of Perforated Cable Tray Horizontal Formation Wall / Structure Supported	1
PDS: E 527	Fixing Arrangement of Perforated Cable Tray Vertical Formation	1
PDS: E 530	Pre-Fabricated Cable Tray Straight Run	1
PDS: E 531	Pre-Fabricated Cable Tray Horizontal Tee	1
PDS: E 532	Pre-Fabricated Cable Tray Horizontal Cross	1
PDS: E 533	Pre-Fabricated Cable Tray 90° Horizontal Bends	1
PDS: E 534	Pre- Fabricated Cable Tray 90° Vertical Bend Bending Rad. 1000 mm	1
PDS: E 535	Pre-Fabricated Cable Tray 90° Vertical Bend Bending Radius 600 mm	1
PDS: E 536	Pre-Fabricated Cable Tray Coupling Arrangement	1
PDS: E 537	Pre-Fabricated Cable Tray Fixing Arrangement	1
PDS: E 538	Pre-Fabricated Cable Tray Reducing Coupler Plate	1
PDS: E 547	Aluminium Junction Box	3
PDS: E 557	Terminal Block for Aluminium Junction Box (Six Terminals)	1
PDS: E 602	Earthing Conductor Details	2
PDS: E 603	Arrangement of Connections of Earth Conductors	6
PDS: E 604	Typical Details of Connection in Earth Pit	1
PDS: E 605	Earth Pit Details	2
PDS: E 606	Typical Arrangement of Earthing for Motor and Start Stop Push Button	2
PDS: E 607	GI Crank Bolts & Nuts with washer for Lightning Protection	1
PDS: E 609	Typical Earthing Arrangement of Rails	1
PDS: E 610	3.8 M GI Electrode for Earthing	1
PDS: E 611	GI/Al Accessories for Earth Electrode	2
PDS: E 612	Typical Earthing Arrangement across Pipe Joints/ Valves	1
PDS: E 613	Earthing of Storage Tank & Vessel	1
PDS: E 614	Fixing Arrangement of Air Termination and Roof/Down Conductor for Lightning Protection System	6
PDS: E 615	GI Earth Bus	1
PDS: E 617	Typical Arrangement for Neutral and Equipment Earthing	1

FORM NO: 02-0000-0021 F2 REV3 All rights reserved

1.0 SCOPE

1.1 This scope of works covers the complete design, engineering, manufacture, supply of all electrical equipment, testing at works, dispatch, storage, handling, erection, testing and commissioning at site of complete electrical system required for Implementation of Zero Liquid Discharge Unit at RFCL, Ramagundam.

1.2 This specification shall be read in conjunction with all drawing and documents, data sheets attached and other relevant reference as specified therein.

1.3 The minimum scope of work shall broadly include Supply, Installation, Testing & Commissioning of the followings:-

- PMCC (Power & Motor Control Centre)
- EPMCC (Emergency Power & Motor Control Centre)
- Motors
- Local Control Stations for motors
- Wall mounted Distribution Boards
- DCDB
- UPS ACDB
- VFD, if applicable
- Power, Control, Lighting Cable Supply, Laying and Termination at both ends.
- Junction boxes
- Illuminations system
- Lighting Sub Distribution Board
- Cable trench/Cable tray with supporting structure
- I/O Panel
- 63A, 25A, 16A Interlocking type Switch Socket & Plug
- Earthing & Lightning Protection
- Any other items not specified but required for the safe and complete operation of the system.

1.4 Minimum scope of bidder shall also include basic & detailed engineering as follows:

- Basic engineering calculations, i.e. load list, load analysis, voltage drop during motor start-up/reacceleration etc.
- Design & sizing calculation for switchboards, cables, illumination system, earthing & lightning protection, cable trays etc.
- Development of Overall Single Line Diagram and single line diagrams for individual switchboards
- Preparation of Electrical Equipment list and Motor List.

All rights reserved

- Preparation of Electrical and Instrumentation interlock and interface requirements as per process/operational requirements.
- Schematic & wiring drg. showing protection, metering annunciation details etc.
- Preparation of various layout drawings like civil scope, cable tray layouts, lighting layout, earthing & lightning protection layout etc.
- Procurement engineering activities including preparation of enquiry specifications, bid evaluation, preparation of purchase specifications, expediting and approval of vendor drawings.
- Preparation of Cable schedule, drum schedules, Lighting/Power panel schedules.
- Preparation of bill of materials for cabling, lighting and miscellaneous items.
- Interconnection drawings.
- Relay co-ordination drawings, Protection coordination drawings, relay setting calculations; relay parameterization for complete system.
- Preparation of interface drawings including co-ordination with all other areas required for completeness of the system.
- Preparation of As-built drawings
- Preparation of QAP & shop inspection for electrical equipments.
- Any other works/activities, which are not listed above, however are necessary for completeness of electrical system.

1.5 This specification contains specifications of the major equipments to indicate the basic requirement and serve as a guideline. However, it shall be the responsibility of the bidder to offer a complete electrical system of superior quality, even if the specifications of certain items are not given.

1.6 The bidder shall offer the best and most suitable type of energy efficient equipments manufactured by well known reputed manufacturers as per vendor list appended elsewhere in this bid package. However, for the sake of standardization of the electrical equipment and material used for the electrical installation, the bidder shall be ready to supply the equipment of a particular type and or make.

1.7 Construction power will be provided at 415V by the owner at single point on chargeable basis. Billing methodology shall be finalized with RFCL Site F&A. Further distribution including supply, erection of all required materials like structural supports for cable trays, cable trays, power & control cables, protection & metering, cable termination at both ends etc. as well as underground cabling works shall be in LSTK Contractor's scope. LSTK Contractor shall ensure that the minimum power factor of 0.9 shall be maintained at their end by providing suitable power factor improvement devices. For Construction power, LSTK Contractor shall consider energy meter, adequately rated distribution and sub distribution boards/feeder pillars, power supply cables and other associated materials for feeding loads to carry out construction and fabrication activities at LSTK Contractor's own cost. **Bidder to indicate the construction power requirement with the bid.**

All rights reserved

Construction power provided during ZLD plant commissioning shall be utilised by the LSTK Contractor with adequate protections such that, both human safety & no nuisance tripping of RFCL feeders, is ensured.

However, during non availability of construction power bidder to arrange suitable Diesel Generator Set with all accessories/DB's/cables etc. for carry out site construction, erection/commissioning activities uninterruptedly.

1.8 Contractor shall provide adequate area lighting at site of construction, fabrication yards and office etc. by means of suitable lighting fixture, lighting masts, flood lighting poles etc. which are to be supplied and maintained by the contractor as per safety aspect.

1.9 Owner will provide 2 nos. power feeder at 415V for normal power supply, 2 nos. power feeder at 415 for emergency power supply from their existing switchboards installed at electrical Substation-5. Further distribution including supply & installation of new PMCC & EPMCC, supply & laying of cables, cable termination at both end, owner's feeder modification to meet the system / NIT requirement, relay setting & its co-ordination with the existing system and all associated works shall be in LSTK Contractor's scope for the completeness of the project.

1.10 Owner will also provide 2 nos. feeder for DC supply and 2 nos. feeder each of Normal & Emergency for lighting from their existing DCDB, MLDB & EMLDB installed at electrical Substation-5. Further distribution including supply & installation of DCDB and Normal & Emergency Lighting DB, supply & laying of cables, cable termination at both end and all associated works shall be in LSTK Contractor's scope for the completeness of the project.

1.11 Owner will also provide 2 nos. feeder for AC UPS supply from their existing ACDB, installed at Water Block Control Room. Further distribution including supply of ACDB, supply & laying of cables, cable termination at both end and all associated works shall be in LSTK Contractor's scope for the completeness of the project.

1.12 No new substation is required. Owner will provide the space to install PMCC, EPMCC, Normal & Emergency Lighting DB and DCDB in the existing electrical Substation-5 and ACDB in existing Water Block Control Room. Owner will also provide space for installation of VFD in AC room of Substation-5.

1.13 LSTK Contractor shall conduct Arc flash hazard analysis/study as per IEEE-1584 in order to evaluate the incident energy in cal/cm^2 for fault locations in ZLD plant switchgear panels considering the worst-case scenario for arc flash and considering different distribution scenarios (Generation and load configuration of GTG and TS Grid etc.).

Output result of the Arc flash hazard analysis/study shall be used to decide the appropriate class of PPE considering the safety measures as per guidelines from NFPA 70E and LSTK Contractor shall supply sufficient nos. of Arc Flash suits for commissioning, operation and maintenance of ZLD plant.

All rights reserved

Based on Arc flash study calculations, the Arc Flash labels shall be furnished containing following major information as per NFPA 70E 2018. Once soft copy labels are reviewed and accepted by M/s RFCL, LSTK contractor shall supply printed Arc Flash Labels and apply them on respective panels of switchgear panels.

- Arc Hazard Boundary (Inches)

- Working Distance (inches)

- Arc flash incident energy at the working distance (calories/cm2)

- PPE category and description including the glove rating

- Voltage rating of the equipment

- Limited approach distance (inches)

- Restricted Approach distance (inches)

- Equipment ID /Bus Name

- Upstream Power Source

- Date Prepared

1.14 Mandatory Electrical spares for operation and maintenance of the electrical system shall be supplied by the bidder as listed in this bid package.

1.15 The scope shall also include obtaining all required statutory approval from all statutory bodies. Bidder shall carry out all modifications/alterations required by local statutory bodies. LSTK contractor shall also get the approval from CEIG, Hyderabad/Dy. CEIG, Nizamabad for addition of new electrical equipment of ZLD Plant in RFCL existing Electrical License before extending supply from RFCL.

1.16 All statutory approval/clearance fees shall be paid by LSTK contractor and same shall be reimbursed by RFCL on actual basis after submission of documentary evidence for payment done to Statutory Agencies by the LSTK contractor.

1.17 In case of any discrepancies between Design Specification – Electrical and Technical Specification of equipment / item / work in respect of description of equipment / item / work, the details indicated in the Design Philosophy – Electrical shall prevail. Also, in case of any further discrepancy the job to be carried out as per IS/IEC/BS/IEEE standards whichever applicable or as per RFCL standard practice after obtaining approval from RFCL.

2.0 BASIS OF DESIGN

2.1 General

2.1.1 The electrical installation shall be designed to provide:

 All rights reserved

- Necessary amount of power
- Flexibility
- Service reliability
- Ease of expansion
- Ease of operation and maintenance & inter changeability of equipment
- Safety of personnel

The design of electrical installation shall ensure provision of a safe and reliable supply of electricity at all times. Safe conditions shall be ensured under all operating conditions including those associated with start up and shut down of plant as well as those arising out of failure of electrical equipment. The isolation of part of system of electrical equipment due to either maintenance or shut down shall not compromise safety.

2.1.2 System shall be designed considering following aspects in general :-

- To facilitate inspection, cleaning and maintenance with the care to safety in operation and personnel protection.
- To minimise turnaround times.
- To provide safety, reliability and flexibility of service.
- Adequate provision for future extension and modification.
- Maximum interchangeability of equipment.
- Desired level of operator interface to achieve coordinated efficient and fail-safe operation, data logging and maintenance of the equipment.
- To decide redundancy, stand by, spares and overload capacities to achieve desired reliability and flexibility requirement.
- To get cost effective and techno commercially proven technology. Economic considerations shall cover capital and running costs and an assessment of the reliability and consequent availability of the system.

2.1.3 All the electrical consumers in the bidder's scope shall be correctly identified and listed to have complete details of rating, efficiency, power factor, operating duty cycle (continuous, intermittent, standby), category of supply required (emergency, normal, critical) etc.

2.1.4 While sizing the system necessary consideration shall be given to restrict the system voltage drop within permissible limits during starting of large rated motor.

2.1.5 Wherever any requirement, laid down in this specification, Specification Sheet, Engineering standards, IS, PDS etc. differs from each other. Most stringent requirements shall be prevail/followed.

2.1.6 Bidder while performing design and engineering activities shall adhere to following guidelines.

All rights reserved

i) If any equipment is not covered in this specification but required for successful operation of the Plant, Contractor shall prepare additional specifications for equipment or bulk material taking reference of Indian/International Codes and good engineering practices prevalent in fertilizer industry and obtain owner's approval for the same.

ii) The standard drawings attached with this package define the basic system design and distribution philosophy for the package. This is for guidance purpose only. Contractor shall develop detailed drawings and submit for owner's approval.

iii) Contractor shall consider any other requirement which is not covered in this bid package, but required for successful operation of the plants without any extra cost and time implications.

iv) Contractor shall obtain approval from all statutory authorities such as Central Electricity Authority (CEA)/Electrical Inspectorate, Chief Controller of Explosives (CCoE)/PESO, CPCB etc. for all electrical facilities including electrical switchboards & panels supplied and installed by LSTK contractor.

v) Equipment specification sheet/data sheets for all equipment shall be prepared by the contractor based on relevant codes and specifications. Data sheet shall contain all technical data and information which are essential for review and technical acceptability, detailed engineering, installation, testing, repair and maintenance, replacement etc.

vi) Bidder shall clearly specify in their purchase specifications, the requirement of conducting other special tests/type tests, which are envisaged for various electrical equipment, which shall have no impact on cost and time.

vii) Load Summary shall be prepared by the contractor to determine ratings of electrical equipments (Switchgears, cables etc.), to evenly distribute plant loads among the various switchgear, and to evaluate the need for power factor correction.
The maximum normal running load and the peak load shall be calculated as follows:
Maximum Normal Running Load = (100% of sum of all continuous load) + {(40% of sum of all intermittent loads) or largest intermittent load, whichever is higher)} + {(10% of sum of all standby loads) or largest standby load, whichever is higher}.

All the electrical equipments shall be designed / sized considering motor input power (i.e. BKW divided by motor efficiency).

Line loss of 2% to be considered for equipment sizing.

All the electrical equipments like Switchboards etc. shall be suitable for starting of the largest motor, while other loads are running, considering peak load condition.

All rights reserved

viii) Switchboards and MCCs fed from other switchboards shall be rated for 125% of peak load.

ix) Bidder to note that equipment rating and quantity, wherever specified in the NIT shall be considered as minimum rating & quantity. Bidder shall be responsible to verify the same at their end and provide equipment with higher rating & quantity subject to minimum rating as per NIT. Also, its compliance shall not have any cost & time implications to owner.

x) Bidder shall visit the site and collect all relevant information required for designing of complete system before quoting.

xi) All the electrical equipments shall be of proven design and technology.

xii) Normal & Emergency Load details (rating of all motor, Lighting, Switch socket etc.) load shall be submitted.

2.2 Statutory requirement Codes and Standards

The design and the installation shall be in accordance with established codes, good engineering practices and shall conform to the statutory regulations applicable in the country. Bidder shall be responsible for obtaining necessary approvals from the statutory authorities e.g. Electrical Inspectorate, PESO as applicable before commissioning of electrical facilities. The CEA clearance for electrical equipment and components thereof shall be obtained by the bidder.

2.2.1 Latest version of main codes, standards and statutory regulations shall be considered as minimum requirements are as given below:

- Indian Standard Specification
- Indian Electricity Act
- Indian Electricity Rules
- International Electro-Technical Commission
- The Factory Act
- API Standards/IEEE

2.3 Site Conditions

The equipment shall be designed for the following site conditions:-

A.	Maximum ambient temperature	47.5°C
B.	Minimum ambient temperature	8.4°C
C.	Design Reference Temperature	50°C
D.	Relative Humidity (min./max./design)	11 / 97.4 / 100%
E.	Altitude above mean sea level	About 152 Mtr.

All rights reserved

F.	Atmospheric pollution	Dusty due to presence of urea dust and corrosive due to presence of vapours of Ammonia.
G.	Seismic Zone	Refer Civil Design Specification
H.	Design Wind Speed	Refer Civil Design Specification

3.0 AREA CLASSIFICATION

3.1 The hazardous zones if applicable, within the project area shall be classified according to the requirement of IS/IEC. The bidder shall furnish area classification drawing.

3.2 All electrical equipments installed in the areas classified as hazardous shall be certified for such use by a recognized international certifying authority such as CIMFR, Dhanbad /PESO, Nagpur etc.

For those items where overseas OEM vendor will supply the electrical equipment certificate from international authority can be accepted but the certification shall be approved by PESO (earlier CCoE), Nagpur India.

4.0 SYSTEM DETAILS AND UTILIZATION VOLTAGES

4.1 The various voltage levels for distribution shall be as follows:

Distribution Equipment	a) 415V ± 10%, 50 Hz ± 3%, 3 Ph, 4 W solidly grounded neutral. Fault Level 50kA for 1 sec. b) 415V ± 10%, 3 Ph, 4 W/240V ± 10%, 1 Ph, 2W, 50 Hz ± 3% solidly grounded neutral.
Combined variation in voltage & frequency	± 10%
Control Supply for: - 415V motors - Switch Gear: a. Closing & tripping b. Auxiliary power	 AC 240V± 10%, 50Hz ± 3%, 1Ph (For contactor controlled motors) DC 220V ± 5% (For breaker controlled motors) DC 220V ± 5%, 2 W AC 240V ± 10%, 50 Hz ± 3%, 1Ph, 2W
- Instrumentation and Automation, DCS & auxiliaries	AC 115V ± 5%, 50 Hz ± 2% 1Ph, 2W
Voltage Ratings - Motors upto 150 KW - Heaters - Space heaters - Lighting - Panic Lights - Power Sockets/Receptable - Portable safety lamps & Tools	 415V, 3 Ph AC To Manufacture's requirement 240V, 1 Ph AC 415V/240V AC 220V DC 415V, 3Ph AC/240V, 1Ph AC 24V AC

The neutral of 415V supply system shall be solidly earthed. The DC system shall have positive pole earthed through high impedance. Prospective touch voltage earthing shall comply with the requirements of relevant Indian/IEC Standards.

5.0 POWER SUPPLY DISTRIBUTION

All rights reserved

5.1.1 Owner will provide 2 nos. power feeder at 415V for normal power supply, 2 nos. power feeder at 415 for emergency power supply from their existing switchboards installed at electrical Substation-5. Further distribution including supply & installation of new PMCC & EPMCC, supply & laying of cables, cable termination at both end, owner's feeder modification to meet the system / NIT requirement, relay setting and all associated works shall be in LSTK Contractor's scope for the completeness of the project.

5.1.2 Owner will also provide 2 nos. feeder for DC Supply and 2 nos. feeder each of normal & emergency for lighting from their existing DCDB, MLDB & EMLDB installed at electrical Substation-5. Further distribution including supply & installation of DCDB and normal & emergency Lighting DB, supply & laying of cables, cable termination at both end and all associated works shall be in LSTK Contractor's scope for the completeness of the project.

5.1.3 Owner will also provide 2 nos. feeder for AC UPS Supply from their existing ACDB installed at Water Block Control Room. Further distribution including supply & installation of ACDB, supply & laying of cables, cable termination at both end and all associated works shall be in LSTK Contractor's scope for the completeness of the project.

5.1.4 Bidder to furnish total power requirements for normal, emergency, UPS, DC & lighting load along with bid so that owner shall take necessary action to arrange power for the bidder.

5.1.5 The electrical system shall be designed for a high degree of reliability and availability. Double radial mode of power distribution shall be adopted up to all major distribution switch boards.

5.1.6 LV switchboards, cables, distribution boards etc for normal, emergency, UPS, DC & Lighting power supply distribution to motors and other loads of plant shall also be in the scope of bidder.

5.1.7 Supply, Laying, Termination, Supporting, Erection, Testing and Commissioning of all Power, Control, UPS, DC and Lighting cables from Bidder's switchboards/DBs to Plant equipments in bidder's scope. Cables shall be laid in overhead cable trays to the extent possible, cables may also be laid in cable trench where space constraint for structure is there. Cable trench/cable tray for all power, control, UPS, DC & lighting with support structure shall be in bidder's scope. Wherever available, owner existing cable tray/trench shall be used for laying the cables.

5.1.8 Inter tripping & interlocking cable between owner's switchboards & receiving end bidder's switchboards shall be in the scope of the bidder.

5.1.9 Bidder shall consider Marshalling I/O panel for DI, DO & AI signals from switch board to DCS/PLC and vice versa.

All rights reserved

5.1.10 All Interfacing cable from switch board to common marshalling I/O Panel and further connection to DCS/PLC (located in Central control room) shall be in the bidder's scope.

5.1.11 Bidder shall consider I/O panel for DI, DO & AI signals from switch board to LMS and vice versa.

5.1.12 All Interfacing cable from LMS to common I/O Panel and further connection to switch boards (breaker control feeder) shall be in the bidder's scope.

5.1.13 Following facility (DI, DO, AI) for interface package PLC shall be provided.

- START, STOP Command from DCS/PLC
- Running Indication from MCC
- Motor Fault Alarm from MCC
- Current Indication from MCC
- L/R Switch Indication from Field
- Ready to START F/B from MCC
- Start permissive if any

i) For start / stop of all electrical equipments, local/remote selector switch shall be located in field, A/M (Auto/ Manual) and stop push buttons on consoles in CCR.

ii) Local stop push button on LCS (local control station) shall be always effective.

iii) In LOCAL mode, both START and STOP shall be possible only from LOCAL. Only in REMOTE, stopping is possible from control system.

iv) Auto / manual selection shall be in PLC/Main Control System.

5.1.14 Each incoming feeder shall be sized for 125% load of the switch board. The outgoing feeders shall be sized for the nominal load.

5.1.15 The entry of cables in the switchboards shall be from bottom only.

5.1.16 An Auxiliary Services Power Board (ASPB) shall be provided in the plant for supplying power to welding switch sockets and other auxiliary loads.

5.1.17 All switchboards shall be provided with minimum two incoming feeders and one bus tie having auto/manual changeover facility.

5.1.18 Momentary paralleling of the system shall be possible for changeover without supply interruption in 415V panels.

5.1.19 The normal operation of the Power & Motor Control Centre (PMCC)/EPMCC shall be as under:

i) Bus coupler shall be provided between all the sources. Incomer and bus coupler breaker rating shall be same for all the switchboards.

All rights reserved

ii) Each incoming feeder shall independently feed the loads on respective buses with full rated bus tie breaker open and the load on each bus balanced. In order to ensure maximum degree of reliability and continuity, automatic transfer from one incoming feeder to other shall be possible through auto/manual closing of bus tie breaker in case of sustained loss of power on any bus section.

iii) The bus tie breaker shall be provided with auto/manual selection. The bus tie breaker shall be independent in manual mode. In auto selection mode, the bus tie breaker is electrically interlocked with incoming circuit breakers, so that it cannot be closed unless one of the incoming breakers is open.

iv) When one of the incoming feeder trips, the bus tie breaker is closed automatically based on the philosophy described below and the total load is transferred to other healthy incoming feeder which is capable of carrying the entire load. Sufficient switchgear capacity is to be provided. Time for changeover is suitably selected based on downstream system requirement of reacceleration of motors etc.

v) No under voltage tripping to be provided to incomer/buscoupler or power feeder breakers. Auto changeover provision to be made provided with bypass selection.

vi) Momentary Paralleling of the breaker to be made possible with auto changeover facility to trip the desired breaker without interruption of power. All the switchboard/panel to be designed as per this requirement.

vii) Tripping of incomer breakers shall be prevented in case of loss of power of both the incomers.

5.1.20 PMCC/EPMCC shall have redundant control supply, out of which single supply from one source will run throughout the panel with auto changeover contactor for the same in case of supply failure from any of the incomer feeder.

5.1.21 Provision for future extension of switchboards shall be considered. One panel extension space on each side (for each bus section).

5.1.22 Fire barriers shall be provided at cable entry/exit point. Cables shall have fire protection paint for 1 m length at building entry points for above ground cables.

5.2 Instrumentation Power

5.2.1 The power supply for instrument shall be made available by the owner at 115V, 1Ph from existing UPS system.

5.2.2 Owner will provide 2 nos. feeders for AC UPS supply from their existing ACDB installed at Water Block Control Room. Further distribution including supply & installation of new ACDB in existing Water Block Control Room, supply & laying of cables from existing ACDB to new ACDB (by contractor) and further to the various UPS consumers, cable termination at both ends and all associated works shall be in LSTK Contractor's scope for the completeness of the project.

All rights reserved

5.3 **Lighting Distribution**

5.3.1 Owner will provide 2 nos. feeders each of normal & emergency for Lighting from their existing MLDB & EMLDB installed at electrical Substation-5. Further distribution including supply & installation of new normal & emergency Lighting DB in existing Substation-5, supply & laying of cables from existing MLDB/EMLDB to new normal & emergency Lighting DB (by contractor) and further to the lighting consumers, cable termination at both ends and all associated works shall be in LSTK Contractor's scope for the completeness of the project.

5.3.2 Normal & emergency Lighting DB shall consist of two bus sections, sections for Indoor and outdoor lighting. Outdoor bus sections of the DB shall be connected by means of suitably rated contactor operated through photo-cells/clock timer.

5.3.3 New Normal & Emergency Lighting DBs incomers & buscouplers shall have castle key operated mechanical interlocks.

5.3.4 One-third lighting load shall be connected to the emergency power to provide certain light during failure of normal power.

5.3.5 Manual by-pass circuit for outdoor lighting shall be wired up to a switch located in electrical substation so that outdoor lighting can be switched ON or OFF manually to override the automatic switching.

5.3.6 All outdoor lighting fixtures including Aviation Light shall receive power from outdoor lighting feeder of normal/emergency bus.

5.3.7 Lighting Sub Distribution Board (Normal & Emergency) shall have 1 no. of 63A TP & switch neutral isolator switch & 3 no's. feeder circuit of 63A DP MCB having 6/9/12/18 nos. Outgoing (as per requirements) of 16A DP MCB (2/3/4/6 no's. per circuit). This shall be fed from Normal bus & Emergency bus of Lighting DB respectively.

5.4 **DC Power**

5.4.1 Owner will provide 2 nos. feeders for DC Supply from their existing 220V Battery Charger DCDB installed at electrical Substation-5. Further distribution including supply & installation of new DCDB in existing Substation-5, supply & laying of cables from existing DCDB to new DCDB (by contractor) and further to the various DC consumers, cable termination at both ends and all associated works shall be in LSTK Contractor's scope for the completeness of the project.

5.4.2 220V DC system shall be considered for control of circuit breaker feeders and panic lighting.

LSTK Contractor shall consider two DC supply source for all PMCC & EPMCC Boards.

DC power required for closing, tripping and indication of circuit breaker feeders shall be considered at the bus coupler panel through two completely separate circuits, one for tripping and other for closing and indication.

 All rights reserved

6.0 PROTECTION & METERING

6.1 Selection and co-ordination of protection and metering system shall be such as to ensure:

- Selective, sensitive and reliable protection of equipment against damage due to internal or external faults or atmospheric discharge.
- Isolation of fault in the shortest possible time.
- Simplicity of the scheme with maximum protection.
- Uninterrupted operation of healthy system.
- Personnel & plant safety.

6.2 Protective relays shall be of latest version, microprocessor based numerical type on IEC 61850 protocol with redundant communication port and interlinked with online existing ECS. 100% redundancy shall be provided for communication.

6.3 Numerical relay shall have provision for connecting with substation HMI. Separate multifunction meter with communication (for centralized energy monitoring) shall be used and shall not be part of protective device.

6.4 Numerical relay shall have communication on IEC-61850 protocol in redundant mode and meter shall have communication on MODBUS protocol.

6.5 Relays shall support features like remote relay parameterization, disturbance recorder etc. It shall be possible to set/operate the relay from the front facia. Lock out relay shall be conventional type with hand reset facility.

6.6 Special protection if required for any feeder such as differential, restricted earth fault, directional distance power relays etc. shall also be through numerical relay having serial port for monitoring.

6.7 Bus PT, Line PT metering and protection core shall be separate. Moreover Bus PT, Line PT shall be provided with additional core with open delta connection.

6.8 Trip circuit supervision relay shall be VAX-31 and Lock out relay shall be VAJHM.

6.9 In general, fast acting relays (with time delays if required) shall be used and all fault tripping shall be done through high speed tripping relays.

6.10 All motors below 55 KW shall have Fuse monitoring relay, Single Phase preventer, ELR with CBCT, OLR. All motors from 55 KW and above shall have Numerical Motor Protection relay.

6.11 All switchgear shall have ARC Flash Relay installed in them.

6.12 Inter tripping relay between owner's panel & LSTK supplied panel shall be in LSTK Contractor's scope.

FORM NO: 02-0000-0021 F2 REV3 All rights reserved

6.13 Laptop & communication tools for communicating with relays shall be provided by LSTK contractor/vendor. Laptop shall have the following minimum specification 16 GB RAM, I5 Processor & 1 TB SSD.

6.14 Bare minimum protection for power distribution system shall be as indicated below. However, Bidder shall provide any other necessary protection required for complete protection of system :

Type of Protection	**Motor Feeder**	**Outgoing Feeder**	**Incomer**
	HT	PMCC	PMCC
51 - IDMTL over-current	-	Yes	Yes
51N - IDMTL earth-fault	-	Yes	Yes
51G - backup E/F (secondary neutral)	-	No	No
Motor protection with locked rotor feature 50, 50N, 46, 49, 50L/R etc.	Yes	Yes (5)	No
64R - instantaneous restricted earth-fault (secondary side)	-	No	Yes (17)
50 - instantaneous over-current	-	No	No
50N - instantaneous earth-fault	-	No	No
87 - differential protection	Yes (2)	No	No
86 - tripping	Yes (10)	Yes (10)	Yes
95 - trip circuit supervision	Yes	Yes	Yes
63 - Auxiliary Relay including pressure release device (Transformer)	-	No	No
27, 2- under-voltage with timer	Yes (8)	-	Yes (3)
25 - check synchronization relay	-	-	Yes (6)

Notes:-

1. --
2. For motors rated 2000 KW and above.
3. For switchgears where auto transfer feature is provided.
4. --
5. For motor feeders rated 55 KW and above.

All rights reserved

6. For switchgears having bus transfer scheme. Where continuous or momentary paralleling is envisaged. Check synchronising relay shall be integrated with overall paralleling scheme.
7. The bus tie feeder in switchboards shall be provided with 51, 51N, 86 and 95 relays.
8. HT breaker controlled motor feeders or contactor feeders with DC control supply. U/V tripping of motors in 6.6 KV system shall be based on critical/non-critical selection (0.5/5 sec).
9. One no. DC supply supervision relay (80) shall be provided for each incoming DC supply to the switchboard with audio/visual annunciation.
10. Two sets of 86 relays shall be considered for each HT/LT motor feeder. One for electrical tripping and other for process tripping. 86 relay for process trip shall be of self reset type with flag.
11. Pilot wire protection through fibre optic cable (87) shall be provided for inter substation incomer cables.
12. PT fuse failure relays in HT/LT panels and bus bar differential supervision relay (VTX31) shall be provided.
13. Value of stabilising resistor for differential relay (CAG 14) to be selected suitably based on fault level.
14. The breaker contacts for critical logic (upstream/downstream tripping, changeover etc.) shall be provided directly from breaker auxiliary contacts and not from auxiliary contactors.
15. Memory/History of the Numerical relay shall not get erased due to loss of auxiliary supply of the relay. Preferably similar make of relays to be installed.
16. --
17. --
18. DC supply supervision relay (80) shall be provided in the Switchgear with provision for annunciation locally at switchboard.
19. MPCB to be provided in the primary side of Line PT & Bus PT of 415V switchboards.

6.15 Metering instruments shall be provided to keep record of power consumption and supervision of all concerned parameters like current, voltage, power (Active, Apparent and Reactive), frequency, power factor, Energy (Active & Reactive) etc. All the instruments shall be flush mounted. All meters shall be digital multifunctional meters with communication port for energy management at remote location. Additionally Analogue type ammeter, voltmeter and Hour Meter shall be provided separately for various feeders as indicated below:

Feeder Type	A	V	Hour Run	Digital Multifunctional Meter
PMCC/EPMCC Incomer	✓	✓	-	✓
PMCC/EPMCC Bus Tie	✓	-	-	✓
PMCC/EPMCC Bus P.T.	-	✓	-	-

All rights reserved

ACB Outgoing	✓	✓	-	✓
LT Motor (55kW & above)	✓	-	✓	✓
HT Motor	✓	-	✓	✓
PMCC/ASB Incomer	✓	✓	-	✓
MCCB/SFU Outgoing (≥ 250 A)	✓	-	-	-
LDB Incomer	✓	✓	-	✓

7.0 CONTROL AND MONITORING

For incomers and bus coupler feeder of respective switchboards shall be provided with RYB, spring charging, ready to close, Trip circuit healthy, breaker test, breaker service, Breaker on/off, upstream/downstream breaker on/off, trip, sync check, DC fail, AC fail indication lamps. Also brief details of control and monitoring requirement for different type of equipments are as follow:-

7.1 Motors Controlled Through ACB/Vacuum Contactor

- Ammeter in LCS and in switchgear.
- Current monitoring at DCS.
- Indication Lamps in switchgear for ‘ON’, ‘OFF’, ‘Auto-trip’ and ‘Trip Circuit Healthy’.
- Emergency trip in switchgear.
- Winding and bearing temperatures of motors shall be available at DCS in control room.
- Process interlock in CCR, where required.
- Motor Space Heater Ammeter
- TNC switch, L/R switch, Indication lamp for ON, OFF, Trip, Space Heater ON, Motor Ready to Start shall be provided on LCS.
- Motor feeder shall have test/run switch to bypass the process interlock for testing of motor.
- Motor ready to start feedback to PLC for all motors.

7.2 Medium Voltage Motors Controlled Through Contactors

- Ammeter in LCS for all motors.
- Current monitoring in DCS for 3.7KW and above.
- Emergency Trip in PMCC/EPMCC.
- Process interlock in CCR, where required.
- Indication lamp for ‘ON’, ‘OFF’ and ‘Fault’ in switchgear.
- Indication lamp for ‘ON’, ‘OFF’ in remote (DCS/PLC etc.)
- Start PB, Stop PB, L/R switch, Indication lamp for ON, OFF, Space Heater ON (motor rated 30KW & above), Motor Ready to Start (for all critical motors) shall be provided on LCS.

All rights reserved

- Motor feeder shall have test/run switch to bypass the process interlock for testing of motor.
- Motor ready to start feedback to PLC for all motors.

7.3 A/M, L/R, Synch selection, Trip selector switch shall be provided in bus coupler feeder of respective switchboards.

7.4 Microprocessor based Trip/Alarm Annunciator window shall be provided in the all breaker controlled feeders.

7.5 Auto lead lag selection at PLC for scheduled changeover of motors.

8.0 EQUIPMENT SPECIFICATION

8.1 General Constructional Features

8.1.1 The equipment shall be suitable for tropical climate conditions and corrosive and saline atmosphere.

8.1.2 The equipment to be installed in indoor plant area shall be enclosed in dust, damp and vermin proof enclosure equivalent to IP 54 as per relevant Indian Standards/IEC.

8.1.3 The equipment to be installed in outdoor plant area shall have IP 55 enclosure.

8.1.4 The switch boards, to be installed inside the building shall have enclosure degree of protection IP 52 up to 1600A rating and IP-4X above 1600A rating for LV switchgear.

8.1.5 FRP (fire retardant and UV stabilized) canopies shall be provided for all electrical equipment installed outdoor like starters, motor, LCS, SDBs, Sw. Sockets, JBs etc.

8.1.6 All mating surfaces shall be properly machined. Neoprene gaskets shall be used for dust and weather proofing. The gaskets shall be without any discontinuity.

8.1.7 Special care shall be taken to ensure that the parts to be opened for inspection and maintenance shall retain their dust tightness even after repeated opening and closing.

8.1.8 Only non-hygroscopic materials shall be used for insulation. All insulation shall be specially impregnated to withstand ambient conditions and atmospheric pollution.

8.1.9 All live parts shall be adequately protected to prevent inadvertent or accidental contact.

8.1.10 The minimum clearance and creepage distance of 415V equipment shall be 20/28 mm respectively and positively maintained after necessary connections.

8.1.11 Only hexagonal head fasteners shall be used. All external hardwares shall be of Stainless Steel.

All rights reserved

8.1.12 Earthing terminals complete with sockets and identification marks shall be provided on the enclosure of all electrical equipment, 2 nos. for above 240V and 1 no. for 240V and below. Additional earthing arrangement shall be provided for flameproof equipments.

8.1.13 All equipment shall be provided with name plates containing the relevant particulars along with the description of the item and their respective code nos. The name plates shall be made of the following materials:

- Motor --- Stainless Steel
- Other field mounted equipments --- Aluminium

8.1.14 The equipments, if located in hazardous areas, shall be suitable for hazard involved and shall have the following additional explosion protection:

Equipment		Zone-1	Zone-2
i)	Motors	Exd	HV motors - Exd LV motors - Exe
ii)	Starter panels	Exd	Exd
iii)	Control panels	Exd/Exp	Exd
iv)	Local Control Stations	Exd	Exd
v)	Lighting fixtures, hand lamps	Exd	Exe/Exd
vi)	Switch sockets	Exd	Exd
vii)	Switches/Isolators	Exd	Exd
viii)	Junction Boxes	Exd	Exd
ix)	Exhaust Fan	Exd	Exd
x)	Other equipments producing sparks under normal operation	Exd/Exp	Exd
xi)	Other equipments not producing sparks	Exd/Exp	Exn/Exe

8.1.15 Motors for hazardous area application, when fed from VFD shall have enclosure protection flameproof Ex'd' irrespective of area classification.

8.1.16 All the electrical equipment shall be provided with rolled aluminium/stainless steel heavy duty compression type cable glands and crimping lugs for the cable terminations.

8.1.17 The outside surface of all equipment shall be painted after suitable pre-treatment by the application of two coats of anti-rust and corrosion resisting epoxy based paint.

8.2 Switch Boards

8.2.1 General

8.2.1.1 Design and manufacturing of LT Switchboard by channel partner, franchise or sub-vendor of the OEM shall not be acceptable in any case.

FORM NO: 02-0000-0021 F2 REV3 All rights reserved

8.2.1.2 There shall be three positions for Breaker/Contactor trolley: - Service, Test and Isolate. In service position, the power connections shall be made; but in test and isolate mode, the power connection of bus bars shall be automatically removed.

While rack in from test/isolate to service position breaker shall not get accidentally ON, also ON breaker shall not be able to rack in from test/isolate to service position.

8.2.1.3 Two no. incomers with bus coupler arrangement to be provided for all 415V switchboards.

8.2.1.4 ACB/Vacuum Contactor feeder for PMCC/EPMCC shall be single front for ease of operation & maintenance. Non-ACB feeders for motors or power may be double front type.

8.2.1.5 EPMCC shall be provided with 3 nos. incomers (2 nos. normal & 1 no. emergency feeder) and 2 nos. bus coupler.

8.2.1.6 Suitable shutter arrangement shall be provided to protect the person from accidental contact with live bus in trolley chamber.

8.2.1.7 LV circuit breaker shall be 4 Pole type.

8.2.1.8 LV Switchboard above 1600A incomers and bus couplers shall be IP-42 and other panels shall be IP-52 below 1600A, complete 415V switchboards shall be IP-52.

8.2.1.9 Bus bars shall be made of high conductivity aluminium alloy and shall be provided with Raychem make heat shrinkable sleeves.

8.2.1.10 FRP supports shall be used for bus bars with adequate clearances and creepage distance to prevent flash over due to effect of dust moisture.

8.2.1.11 Protective relays shall be mounted on the front of the switchgear panel.

8.2.1.12 Protective relays for incoming feeders, bus ties, outgoing feeders and motor feeders shall be microprocessor based numerical type with communication facility.

8.2.1.13 All types of logic, program & setting files for numerical relay shall be provided by the vendor/LSTK Contractor.

8.2.1.14 LOTO (locked out tag out) arrangement shall be provided for all switch boards (i.e. each module of PMCC/EPMCC/MLDB/EMLDB etc.) which shall include following provisions:-

- Provision for hooking lockout devices by multiple lock arrangement to prevent opening of panel door and racking-in of circuit breaker.
- Provision for attaching tag-out device for warning against energisation and to provide information regarding date of isolation, agency working on the equipment, etc.

All rights reserved

- Provision for Hasp such that the same shall be put-in and closed in the locking arrangement of the breaker/switch and panel door.

8.2.1.15 All switchboards shall be suitable for closed door operation.

8.2.1.16 LV switchboard shall conform to IEC 60947. All LV Switchboard shall be TTA (Total Type tested assembly) as per requirement of IEC: 61439 & Internal Arc Containment test as per IEC: 61641 (internal arc withstand due to fault current shall be minimum 50KA for 0.1 sec). Type Test Certificates for short circuit withstand of 50kA for 1 sec. along with ACB mounted in the switchboards shall be provided.

8.2.1.17 Clearance between gland plate to cable termination point in all switchboards shall be adequate but not less than 300mm to ensure proper cable termination.

8.2.1.18 4 pole ACB shall be provided for incomer & bus coupler of PMCC, EPMCC etc. While 4 pole MCCB may be provided for incomer and bus coupler of MLDB.

8.2.1.19 All meters shall be digital multifunctional meters with communication port for ECS at remote location. Additionally analogue type ammeter, voltmeter and Hour Meter shall be provided separately for various feeders as indicated under clause No. 6.13 above.

8.2.1.20 A continuous ground bus shall be provided at the bottom of the switchgear and in cable connection side for grounding the switchgear, breaker trolley as well as to ground the cable glands.

8.2.1.21 The minimum thickness of sheet steel used in LV switchgear including MLDB, UPS ACDB, DCDB etc. shall be as under:-

- Base Channel minimum 3.0 mm
- Load Bearing Members minimum 2.0 mm
- Doors and covers minimum 1.6 mm

8.2.1.22 The switchboards shall have adequate short-circuit ratings and be suitably sized for the load and spare capacity foreseen. The short time rating of busbar shall be 1 sec for LV switchboards and other boards.

8.2.1.23 The Power & Motor Control Centres shall normally have two spare circuit breaker panel, one on each side of bus-section. LV switchboards shall have sufficient no. of spare outgoing feeders (including vacuum contactor feeders) to the extent of min. 20% for each type & rating rounded off to next higher digit.

8.2.1.24 For other boards sufficient number of spare feeders to the extent of min. 20% for each type & rating shall be provided.

8.2.1.25 The switch boards shall have Raychem make heat shrinkable sleeve bus bar system suitable for rated voltage. At joints of these bus bars removable shrouds shall be provided.

All rights reserved

8.2.1.26 All switch boards shall generally have two sections operating independently with two fully rated incoming feeders and with bus coupler open having facility for changeover in the event of failure of either of the incoming circuit breakers.

8.2.1.27 No common alarm circuit (except hooter/bell) in bus coupler feeders as each feeder will have its own microprocessor based annunciator.

8.2.1.28 Auto changeover scheme shall be provided for incomers and bus couplers on all PMCC/EPMCC. Under normal operating conditions, incomer-1 and incomer-2 breakers would be closed and bus coupler breaker would remain open with 'auto-manual' switch in 'auto' position. The bus coupler switch would close automatically under the following condition being fulfilled:-

i. Either of the incoming breaker trips due to under voltage (70% or below).
ii. Voltage on the healthy bus is more than 80% for the set period.
iii. Residual voltage on the bus with no power supply comes down to 30%.
iv. Auto change over shall be locked on loss of power on both the incomers.

8.2.1.29 Auto changeover shall also be provided on switchboards catering to emergency loads.

8.2.1.30 Paralleling of two incoming feeders is not foreseen. However, facility for momentary paralleling shall be provided for intentional changeover without interruption of supply.

8.2.1.31 Every enclosure door that provides access to live parts operating at 240V AC and above shall be mechanically interlocked with a circuit interrupting device on the supply side such that when the door is open, the equipment is de-energised.

8.2.1.32 Control supply for motor feeders having switch-fuse units in PMCC/EPMCC and VFD panels etc., shall be taken from panel itself and motor controlled with breaker/vacuum contactor shall have 220 V DC control supply.

8.2.1.33 For motors with auto-starting provision, trip of a running motor will start standby motor automatically.

8.2.1.34 Motor shall stop from local/remote irrespective of its selector switch position.

8.2.1.35 Motor shall not start in any case, if emergency stop push button is pressed.

8.2.1.36 Manual bypass arrangement for plc stop & permissive so as to prevent motor failure in case of PLC hanging.

8.2.1.37 Metallic danger boards/plates as per latest IS having English & Telugu language shall be provided.

8.2.1.38 Energy meter as per latest standard shall be installed on all the incomer feeders for monitoring energy consumption of ZLD plant.

8.2.1.39 For all other specifications, refer attached TS-8060, TS-8080 & TS-8083.

All rights reserved

8.2.2 Low Voltage Switchgears

8.2.2.1 415 V Switchboards and Distribution Boards shall include the following:

a) Power-cum-Motor Control Centres (PMCCs)

b) Emergency Power & Motor Control Centres (EPMCCs)

c) UPS ACDB

d) DCDB

e) Lighting DB

f) Power Distribution Boards

8.2.2.2 Low voltage switchboards shall be metal clad, arranged with self supporting units and assembled together in a row.

8.2.2.3 The switchboards shall be suitable for extension at both the ends.

8.2.2.4 The PMCC/EPMCC/MLDB shall be of single/double front, draw out type having bottom cable entry. LT Switch Board component rating shall be selected based on type-2 co-ordination, minimum rating of components shall be as per PDS: E 402 & PDS: E 404. However, type-2 co-ordination recommended by manufacturer to be followed which shall be subject to approval by RFCL/PDIL during detail engineering.

8.2.2.5 The main bus bars of LV switchboards shall have Raychem make heat shrinkable insulated sleeves and shall be made of high conductivity aluminium alloy.

8.2.2.6 Bus bars shall be of uniform cross section and supported on non-hydroscopic FRP insulators with adequate clearances and creepage distance to prevent flash over due to effect of dust/moisture.

8.2.2.7 Sufficient bus supports shall be provided to give adequate mechanical strength during short circuits.

8.2.2.8 A continuous ground bus shall be provided at the bottom in the PMCC/EPMCC/ Lighting DB/Emergency Lighting DB for grounding the PMCC/EPMCC/Lighting DB/ Emergency Lighting DB.

8.2.2.9 Rated short circuit breaking capacity of PMCC/EPMCC shall be min. 50KA for 1 sec.

8.2.2.10 All ACB feeders of PMCC/EPMCC shall be provided with draw out type air circuit breakers.

8.2.2.11 Motor rated below 55KW rating shall be contactor controlled and 55KW & above shall be SFU operated vacuum contactor controlled. Vacuum contactor shall have separate closing & tripping coil. All motors below 55 KW shall have Fuse monitoring relay, Single Phase preventer, ELR with CBCT, OLR. All motors rated 55 KW & above shall have Numerical Motor Protection relay. CBCT in communication with numerical relay for motor rated 55KW and above for motor earth fault protection. All outgoing feeders shall be draw-out type in all the switchboards.

 All rights reserved

8.2.2.12 ACB shall be provided for all feeders rated equal to or more than 630A in all 415V switchboards. Power feeders of rating 250 A & below shall be fed from SFU (refer PDS: E 404) and power feeders rating above 250 A to less than 630 A shall be provided with MCCB.

8.2.2.13 CBCT with earth leakage relay shall also be provided for power feeders rating 125A & above.

8.2.2.14 Critical motor feeders in EPMCC shall be provided with reacceleration scheme. LSTK Contractor shall furnish the list of all critical motors.

8.2.2.15 Switchboards shall be provided with thermostatically controlled anti-condensation heaters.

8.2.2.16 All units in the PMCC/EPMCC shall be completely accessible and removable from front. Both power and control connections shall be plug-in/stab-in type.

8.2.2.17 Bus bar clearances shall conform to relevant Indian Standard/IEC for equipment voltages up to and including 1000V AC.

8.2.2.18 The draw out modules shall be standardized and it shall be possible to interchange any module with a module of same size. The components to control the equipment like switch, starter, fuse, auxiliary relay etc. shall be wired as a unit on the individual module. Safety shutter shall be provided to prevent direct access to live parts when the chassis is removed.

8.2.2.19 The entire draw out construction shall be designed for safe operation during placement or removal of chassis. An earthing arrangement shall be provided which will make contact first before the power contacts are made and break last. Each module shall control one motor in general.

8.2.2.20 The door shall be interlocked so that it cannot be opened unless the isolating switch on that module is OFF or vice versa. However, it shall be provided with a door defeat mechanism for intentional opening when on line for testing and inspection purpose.

8.2.2.21 Control switches for breaker control shall be provided in each breaker cubicle. Circuit breaker shall be interlocked to prevent withdrawal of a closed breaker or insertion of a closed breaker. Each breaker shall be provided with anti pumping device.

8.2.2.22 Provisions shall be made to manually close/trip circuit breakers on loss of control voltage.

8.2.2.23 All low voltage switchboards shall be provided with 20% spare outgoing feeders rounded off to next higher digit subject to minimum one of each rating (fully wired) and with all the components.

8.2.2.24 Marshalling panel & cable alley shall have sufficient space for ease of O&M activities.

8.2.2.25 In manual selection auto restart of motors in the event of tripping of running motor shall be disabled.

 All rights reserved

8.2.2.26 Control TB shall be sturdy.

8.2.2.27 Cable runs, size & source of supply shall be specified on rear side of panels for incomers.

8.2.2.28 All ACB feeders/Vacuum Contactor feeders shall be provided with ON, OFF, Trip, Trip Circuit Healthy, Spring charged indications.

8.2.2.29 For detailed specification refer TS-8060 attached.

8.2.3 Lighting Sub Distribution Boards

8.2.3.1 240V single front, non-draw out type LSDB for power supply to Normal lighting fixtures.

8.2.3.2 240V single front, non-draw out type Emergency LSDB for power supply to Emergency lighting fixtures.

8.2.3.3 LSDB (Normal) & LSDB (Emergency) shall be feed from Lighting DB & Emergency Lighting DB provided by bidder.

8.2.3.4 220V single front, non-draw out type DC LSDBs shall be considered for power supply to Panic lighting fixtures.

8.2.3.5 AC Normal Lighting Sub Distribution Board & AC Emergency Lighting Sub Distribution Board shall have 1 no. of 63A TP & switch neutral isolator switch & 3 no's. feeder circuit of 63A DP MCB having 6/9/12/18 no's. outgoing (as per requirements) of 16A DP MCB (2/3/4/6 no's. per circuit). This shall be fed from normal & emergency bus of Lighting DB respectively.

8.2.3.6 Wall/Structure mounted DC Lighting Sub Distribution Board shall have 16A 2 pole DC MCB as incomer, and 6 A as DC MCB as outgoing.

8.2.3.7 The lighting sub distribution boards shall be fabricated out of 2.5 mm thick cold rolled sheet steel and shall be suitable for mounting on wall/structure having min. IP55 Protection.

8.2.3.8 The internal wiring shall be carried out by means of single core PVC insulated 4 sq. mm stranded copper conductor cables.

8.2.3.9 Suitable label inscription consisting of black Perspex with engraving for the board and circuit nos. of all outgoing feeders shall be provided. The label inscription of the board shall contain description and code no. as indicated in Specification Sheet. The circuit nos. of outgoing feeders shall be serially indicated as R1, Y1, B1, R2, Y2, B2.

8.2.3.10 The LSDB shall be complete with terminal block, complete wiring, cable glands, cable lugs and other accessories as required.

8.2.3.11 No Power Socket or Air Conditioning supply shall be given from Lighting Sub Distribution Boards.

 All rights reserved

8.2.3.12 For all other specifications, refer TS-8083.

8.2.4 Distributions Boards

8.2.4.1 The distribution board shall consist of an assembly of a series of floor mounting, identical, metal clad, dead front type panels of unitized design. The panels shall be placed side by side to form a compact assembly and shall be extensible on either side.

8.2.4.2 The complete assembly shall be dust, damp and vermin proof having minimum degree of protection equivalent to IP-54 as per IEC: 60529.

8.2.4.3 The doors and the removable covers shall be provided with non-deteriorating neoprene gaskets.

8.2.4.4 Inter panel barriers shall be provided.

8.2.4.5 Adequate arrangement for earthing shall be provided to safeguard the operator or other personnel from electric hazards under all conditions of operation.

8.2.4.6 The distribution board shall be non-drawout type in single front configuration.

8.2.4.7 Each panel shall have its horizontal bus-bar chamber running on the top with multi-tier module units in the centre and having vertical bus-bar chamber and cable alley on either side.

8.2.4.8 The module door shall be so interlocked that it shall not be possible to open the door with switch in closed position. Defeat interlock facility shall be provided.

8.2.4.9 Incoming supply shall be received through switch fuse unit of adequate rating and shall be provided with voltmeter with selector switch, ammeter with selector switch, KW meter and indication lamps.

8.2.4.10 Outgoing feeders shall be provided with switch fuse.

8.2.4.11 Various components shall be as specified below:

- The switch shall be motor duty type AC-23 category and shall confirm to IS: 13947.
- The fuse shall be of non-deteriorating HRC cartridge link type and shall confirm to IS: 13703.
- Indication lamp shall be LED type having good illumination in all direction with lumen output of minimum 200 milli candela ±10%.
- Ammeters & voltmeters shall be moving iron spring controlled type of class 1.5 accuracy as per IS: 1248. These shall be flush mounting type of minimum size of 72 mm x 72 mm and shall have scale range of 240º.
- The current transformer shall be of minimum 7.5VA burden, class1 accuracy, class F insulated and vacuum impregnated or resin cast and shall confirm to IS: 2705.

All rights reserved

8.2.4.12 The relay, meters, switches and lamps shall be flush mounted. All components of one module shall be mounted on the same module on a rigid sheet steel chassis. A 20 mm dia. rotating knob on the door shall be provided for closing and opening.

8.2.4.13 The bus-bar shall be suitable for the supply system specified in the Specification Sheet.

8.2.4.14 All bus-bars shall be arranged and colours coded according to IS: 5578/11353.

8.2.4.15 The horizontal bus-bar shall run in a separate bus chamber located at the top shall have separate screwed cover for inspection purpose.

8.2.4.16 Horizontal busbars shall be insulated with Raychem make heat shrinkable PVC sleeves. Insulating shrouds shall be provided for all joints of insulated bus-bars.

8.2.4.17 All the live parts which are accessible after opening the front cover / back cover shall be properly insulated or provided with insulating barrier to prevent accidental contact.

8.2.4.18 Nameplate consisting of black Perspex with white engraving shall be provided for each panel and for each equipment mounted on the front of the panel. Suitable label identification for each component mounted inside the panel shall also be provided.

8.2.4.19 All the wirings shall be properly laid and ferruled at both ends. PVC channels may be used for wiring. For control wiring, minimum 1.5 sq. mm copper conductor shall be used.

8.2.4.20 The power connections shall be made by PVC insulated flexible copper cables or taped copper / aluminium strip

8.2.4.21 All power & control cables shall enter from the bottom.

8.2.4.22 Removable bolted aluminium gland plate, heavy duty compression type rolled aluminium cable glands, crimping type aluminium cable lugs for Al cables and copper cable lugs for Cu cables, pressure clamp / bolted type terminals etc. shall be provided for each incoming and outgoing cable.

8.2.4.23 Terminal blocks shall be grouped according to circuit functions and suitably numbered. 20% extra terminals shall be provided in the terminal block.

8.2.4.24 A suitably sized earth bus shall be provided at the bottom of panel with provision for earth connection at both ends to purchaser's earth grid.

8.2.4.25 All panels shall be of same height so as to form a bank which shall give good aesthetic appearance.

8.2.5 Direct Current Distribution Boards

8.2.5.1 The Direct Current Distribution Boards (DCDBs) shall be single front, non-draw type for supply of 220V DC control power to switchgears & panic lighting.

All rights reserved

8.3 Motors

8.3.1 The rating of LV and HV motors shall be selected from the sizes as recommended in relevant Indian Standard/IEC.

8.3.2 The margin between the installed power and absorbed power shall be as recommended by the driven machine supplier but shall not be less than the following:-

Motor Rating	Margin above Driven M/C Absorbed Power
Less than 22 KW	25%
22 KW to below 75 KW	15%
75 KW and above	10%

8.3.3 Voltage rating for the motors of different ratings shall be as below:

Up to 150 KW: 415 V, 3-phase, 50 Hz AC
Above 150 KW: 6.6 KV, 3-phase, 50 Hz AC

8.3.4 The motors shall have maximum rated duty as per relevant Indian Standard/IEC. Consideration shall be given for special duty motors wherever required e.g. cranes etc.

8.3.5 All LV motors shall be TEFC type as per relevant Indian Standards/IEC while HV motors shall be TEFC/CACA type. All motors shall be Class-F insulated with temperature rise limited to that of Class-B.

8.3.6 Normally the motors shall be suitable for DOL starting. However, motors started through VFD shall be suitable to run at 1% to 100% of rated speed and compatible with the VFD. A written confirmation from OEM for safe operation of motor without any damage & long term defect for running motors from 1% to 100% of rated speed shall be provided to the owner.

8.3.7 All motors 30 KW and above shall have space heater provision.

8.3.8 All HT motors shall have winding, hot air and bearing RTDs.

8.3.9 All HT motors shall have safety factor 1.1.

8.3.10 All LV motors shall be energy efficient type having efficiency class of 'IE2' as per IS 12615: 2011 and high power factor type.

8.3.11 The starting current i.e. breakaway current of 415V Motors shall not exceed the values indicated in IS: 12615. Also there shall be no further positive tolerance on the values of breakaway current.

8.3.12 The starting current of 6.6 KV motors shall not exceed 500% of FLC.

8.3.13 Type test certificate of similar motor for use in specified hazardous area (if applicable) shall be furnished.

All rights reserved

8.3.14 The duty cycle of the motor shall meet the process and driven machine requirement.

8.3.15 In case of 6.6KV motor, the terminal box shall be suitably designed for proper termination of XLPE insulated cables through heat shrink termination kit.

8.3.16 The mechanical parameters such as duty, mounting type, shaft extension, direction of rotation, starting torque requirements etc. shall be adequate for the application. Sleeve or anti friction type bearings shall be used. Vertical motors shall have thrust bearings suitable for the load imposed by the driven machinery. Motors with sleeve bearings may require proximity probes to measure shaft vibration adjacent and relative to the bearings. Generally, all motors, except for application such as crane, hoist, turbine/engine starting, shall be designed for continuous duty with rated load.

8.3.17 All motors shall be provided with on-line grease lubrication arrangement as per the following instead of that specified at clause no. 4.8.5 of TS-8102.

All motors shall be provided with on-line grease lubrication arrangement for both DE and NDE side bearings. The arrangement shall be complete with grease nipple and drain plug located at convenient locations. However, in case of motors greased for the life, the guaranteed life of the bearings shall not be less than 30,000 hours.

8.3.18 The voltage available at the motor terminals during start-up must be sufficient to ensure positive starting or re-acceleration of the motor (even with the motor fully loaded, if required) without causing any damage to the motor.

8.3.19 For HT motors, the voltage available at the motor terminals must not be less than 85% of the rated value during start-up or re-acceleration. For LT motors, the voltage available at the motor terminals must not be less than 80% of the rated value during start-up or re-acceleration.

8.3.20 All motors shall have proper access, approach and maintenance platform. If agitator/flasher motors are installed over FRP tank then it shall have proper approach and platform to access the motor without stepping on FRP tank.

8.3.21 Scrapper motor & RO feed motors shall be selected such that in no event these motors shall run below 30% of their rated speed.

8.3.22 Backwash and ABF motors operating philosophy shall be approved by RFCL.

8.3.23 Motor current shall not be more than FLC even in full pump discharge open state.

8.3.24 All blowers shall have adjustable delay timers to bypass the overload relay during motor starting.

8.3.25 For all other specifications, refer TS-8102.

8.4 Variable Speed Drives (VSD/VFD)

8.4.1 Microprocessor based variable speed drive shall be communicable type and shall be able to communicate with ECS/DCS. It shall be possible to set speed from process DCS for optimum performance through 4-20mA signal. Speed/current/status

All rights reserved

feedback to DCS may be provided. Drive will run at preset speed in the event of loss of signal from DCS.

8.4.2 Vendor shall provide VSD/VFD programming software with settings. VSD/VFD shall be such that manual setting & viewing of events, fault records, running parameters & settings can be done easily.

8.4.3 System shall be highly reliable, efficient and shall provide high power factor, low harmonic distortion, low noise level etc.

8.4.4 System shall be provided with complete by pass circuit to ensure the power supply reliability in case of VSD/VFD failure.

8.4.5 The system shall be suitable for load characteristics, continuous speed control and shall be with soft start feature. Drive shall be able to accelerate the load over the full speed range (0–100%) as per process requirement with incoming line voltage variation of ±10% and frequency variation of ±3% with combined voltage and frequency variation of ±10%.

8.4.6 The system shall be designed for 150% over current withstand for 1 minute. The system shall be equipped with an automatic restart facility which will restart the system in case of voltage dip over 20% or power interruptions less than 4 seconds and recovery of voltage to 95% with a facility to block the automatic restart.

8.4.7 The system shall be suitably designed with due care for long length of cables, output filters, chokes, motor insulation, cable voltage grades etc.

8.4.8 The VSD/VFD panel shall be located in the clean air conditioned room in the existing substation-5. Required local control equipment shall have start, stop, speed raise and lower push buttons, ammeter, speed indicator, ON/OFF/READY status selector switches as required and shall be installed near the motor.

8.4.9 The VFD shall be provided with Input and Output Choke.

8.4.10 "Auto Restart" facility for drive system within preset time, typically 0-15 seconds, in case of supply system dip or complete loss of power shall be provided.

8.4.11 Preferably screened type cables or cables as recommended by VSD/VFD vendors shall be used for VSD/VFD systems.

8.4.12 The VSD/VFD panels to be supplied shall be of proven model.

8.4.13 Training of VSD/VFD shall be provided to owner personnel.

8.4.14 Total harmonic distortion of output volts and amps shall be less than 5% (when load is a maximum).

8.4.15 There shall be separate VFDs for each pump motor.

FORM NO: 02-0000-0021 F2 REV3 All rights reserved

8.4.16 VFD shall employ Sine wave PWM control and shall be able to directly control the current (or torque) of an Induction Motor based on present control theory utilizing a magnetic flux observer.

8.4.17 Input supply to the VFD shall be 3 Phase, 415V±10%, and 50Hz±3%.

8.4.18 Voltage drop across the VFD system shall be less than 1% and VFD shall be able to deliver output voltage equivalent to the input supply voltage at rated current. VFD system with higher voltage drop shall be liable to rejection during inspection.

8.4.19 The VFD system/panel shall consist of all system components required to meet the performance, protection, safety, testing and certification criteria. Each VFD unit shall include incoming switchgear (below 55KW rating shall be contactor controlled and 55KW & above shall be SFU operated vacuum contactor controlled), input reactor, harmonic filter if required, three phase diode rectifier acting as a line converter, DC link with capacitor unit, three phase inverter, output contactor, output reactor, by-pass arrangement, by-pass and output power contactor & all other components deemed necessary for proper functioning of the VFD system.

8.4.20 The Control Card CPU shall be 16/32 Bit processor and shall be common for the entire range to limit the inventory on spares.

8.4.21 Minimum 12-pulse rectification configuration scheme is required to limit the harmonics as specified in IEEE 519. Dry type Converter transformer to be provided if required for 12-pulse system and same shall be selected to ensure equal load/current sharing between two secondary windings under all operational conditions including starting & restarting. Transformers shall also be provided with off circuit tap changer of ± 5% in steps of ± 2.5%.

8.4.22 The total harmonic distortion (THD) of the voltage and current at inverter output shall be as per IEC 61800 and same shall also be considered in the motor design. The dv/dt limits & Vpeak shall also be as per IEC-61800-2.

8.4.23 The converter section shall consist of full wave Diode Bridge Rectifier of suitable rating.

8.4.24 The offered VFD shall necessarily employ either AC or DC Reactors at the input side for limiting the harmonics.

8.4.25 Inverter section shall be Insulated Gate Bipolar Transistors (IGBTs) based only.

8.4.26 Due to standing wave phenomenon, high voltage spikes get generated at motor terminals operated with VFD. This results into premature burn out/failure of motor winding. To safe guard motor against these voltage spikes, VFD system shall consist of appropriate protection device at output of the inverter e.g. output choke etc.

8.4.27 The guaranteed minimum efficiency of the total VFD system shall be 97% at 100% speed & 100% load. Efficiency evaluation shall include all components of VFD including output filter or choke if provided.

All rights reserved

8.4.28 The VFD shall maintain a 0.95 minimum true power factor at 50% to 100% speed without any power factor correction unit.

8.4.29 The maximum allowable audible noise from the VFD system shall be less than 85 dB (A) at a distance of 1 m at any speed or load condition.

8.4.30 The VFD system shall be capable of automatically restarting in the event of momentary loss of power or a clearing of a drive trip.

8.4.31 Apart from self diagnostic features available with the VFD, following protections shall also be available:

- Complete Motor protection
- Instantaneous Over current
- Short circuit protection for converter/inverter
- Adjustable Current limit
- DC Bus Under & over voltage
- Control power supply failure
- Phase loss, Phase reversal
- By Pass does not close
- By Pass does not open
- Ground Fault
- Over Voltage
- Under Voltage
- O/P Short Circuit
- Output Phase loss
- Input Phase loss
- Over Speed
- Heat Sink Over temperature
- Stall prevention (During acceleration, deceleration and constant speed operation).

8.4.32 Abnormal conditions shall initiate alarm and shut down drive based on the nature of the fault.

8.4.33 For precise operation in vector control mode, the drive shall have a built in auto tuning function to automatically set motor constants like Motor line to line resistance, Motor leak inductance, Motor iron loss, Motor iron saturation coefficient at 50% of magnetic flux,

Motor iron saturation coefficient at 75% of magnetic flux etc. It shall be able to perform auto tuning without rotating the motor in case the motor is connected to load.

8.4.34 VFD shall be with an interactive and user-friendly digital operator with LCD display. Apart from programming, the digital operator shall allow simple monitoring of inverter

FORM NO: 02-0000-0021 F2 REV3 All rights reserved

operating conditions including speed, current, DC voltage, torque, power etc. Messages shall be Alpha numeric in nature. 7 segment LED display operators are not acceptable. All the fault messages shall be in clear English language. VFD's with operators displaying error codes are not acceptable.

8.4.35 The drive shall have built in monitoring of following parameters as minimum on its digital operator interface:

- Input AC voltage, current and frequency
- Output Voltage
- Output Current of VFD
- Output current in Bypass
- Motor Speed
- Output Voltage
- DC Bus Voltage
- Output Power
- Digital Input Status
- Digital Output Status
- Motor Exciting Current

All these parameter values shall be in engineering units. Required transducers with 4-20mA output shall be provided for indicating motor speed and motor current in DCS.

8.4.36 On occurrence of fault, the VFD shall store the status of all the above parameters prevailing at the time of fault occurrence etc. This shall be available to the user to assist him for fault diagnosis.

8.4.37 The VFD shall store minimum last 3 faults.

8.4.38 VFD shall be able to deliver Class II duty overload as per IEC 146-1 standard i.e. 150% of Motor rated current for 60 sec. Necessary deration, if required, to be taken into accounts to meet overload requirements.

8.4.39 Offered VFD system shall be able to deliver motor rated current continuously and 150% of motor rated current for 60 sec. at 50 deg C temperature after all necessary deration.

8.4.40 VFD shall provide high precise operation throughout the entire speed range, even under fluctuating load conditions. Speed control range shall be 100:1 for open loop vector control. Speed holding accuracy shall be better than +/-0.5%. Output frequency resolution shall be 0.01 Hz.

8.4.41 Logic shall be designed in the VFD to always start the motor in forward direction.

8.4.42 Current rating of semi conducting components shall not be less than 120% of nominal current of VFD at full load and through whole speed range.

FORM NO: 02-0000-0021 F2 REV3 All rights reserved

8.4.43 Input Power Factor (not the fundamental Power factor) shall be greater than 0.9 at 100% load.

8.4.44 The same drive controller shall be able to store 2 motor parameters. It shall be able to switch between these two parameter sets using a multi function input.

8.4.45 The drive shall have 15 or more built in V/F patterns along with a user definable custom V/F pattern.

8.4.46 The unit shall have soft/hard wired control system with suitable interfaces for interlocks with PMCC & DCS of plant

8.4.47 Metering

- Digital speed indicator
- Analog type Ammeter & Voltmeter
- Frequency meter
- Ammeter in LCS near motor. Necessary CT in outgoing side of VFD panel

8.4.48 The following minimum control shall be provided at the VFD control panel

- START
- STOP
- Fault Reset
- Auto and Manual selection
- Manual set points
- VFD/OFF/BYPASS

8.4.49 The following minimum indications by LED lamps with inbuilt LVGP protection, shall be displayed at the VFD control panel

- Ready to start
- Running
- Motor stop
- Fault in VFD
- Motor running on By-pass
- Alarms
- Control supply ON
- Cooling failure

Potential free contacts of ready to start, running, stop & fault in VFD shall be wired separately for indications in DCS system.

8.4.50 Following annunciations shall be provided in VFD panel and potential free contacts shall be provided for owner's use.

- Inverter overload
- Main AC failure

 All rights reserved

- Cooling system failed
- Motor failed to start
- Internal drive fault (failure in rectifier, inverter, over temperature etc)

8.4.51 VFD shall have the following features:

- Power Loss Ride Through for 2 sec.
- Auto tuning.
- Adjustable acceleration/deceleration time
- Adjustable starting torque
- Analog inputs/ outputs of the converter shall be galvanically isolated type. Digital outputs shall be potential free type.
- Inbuilt PID for control of process parameters like flow, pressure etc
- Speed Search for tripless operation of starting a flying motor in both directions.
- Software settable Acceleration/Deceleration time from 0.1 sec. to 1800 sec.
- Adjustable Carrier Frequency
- Adjustable Motor Overload Feature
- Multi Function and user programmable I/O's
- Selectable mode of operation (Either V/f or Vector Control)
- DC Injection braking at start and stop
- Settable minimum and maximum o/p frequency
- Password protection to prevent unauthorised parameter changing.
- S-curve (soft start) acceleration/deceleration
- Motor Slip & Torque Compensations.
- Jump Frequency to avoid VFD operation at resonant oscillation frequency caused by mechanical system.
- Components for the same function and rating shall be identical design, make and of modular construction to reduce the inventory.

8.4.52 The following by-pass features shall be included :

- Manual bypass shall provide all the circuitry necessary to transfer the motor from the VFD to the power line or from the line to the controller while the motor is at zero speed.
- The bypass circuitry shall fully isolate both the VFD input and output from the line & load sides, providing full speed motor operation.
- The AC drive shall include mechanically and electrically interlocked isolation and bypass contactors complete with thermal overload relay, VFD/OFF/BYPASS switch and TEST/NORMAL selector switch.
- Motor overload protection shall be provided in both the controller mode and the bypass mode.
- The operator shall have full control of the bypass starter by operation of the VFD/OFF/BYPASS selector switch.

All rights reserved

- In the automatic mode of operation, the isolation and bypass contactors shall be sequenced by the auto start contact from remote.
- A TEST/NORMAL selector switch shall provide test operation of the power converter while operating the motor in bypass.
- Indication shall be provided for motor operating in Drive or By-pass mode.

8.4.53 VFD manufacturer shall have a variety of communication interface cards for communication of drive with the DCS/PLC system. The communication interface shall be via serial communication link with industry standard open protocol i.e. MODBUS/IEC-61850/ RS-485 etc. and same shall be coordinated with the interfacing equipment.

8.4.54 Degree of protection for VFD control panel shall be IP-54.

8.4.55 Power Bus and Wiring

The main power bus shall be tin-plated, high-conductivity copper for chemical and corrosion resistance and low losses. Bus shall be appropriately sized for the VFD continuous current rating and braced to withstand the mechanical forces caused by a momentary short circuit current of 50 kA expected at the bus. All connections shall be bolted or continuously welded.

8.4.56 The VFD shall be housed in a metal clad cubicle. The panel shall be free standing. & floor mounting type sheet steel panels of unitized design.

8.4.57 The cubicle shall be dust, damp and vermin proof type equivalent to IP-54.

8.4.58 The frame work of cubicles shall be of bolted/ welded construction, fabricated out of cold rolled sheet steel of not less than 2 mm thickness. The thickness of base channel shall not be less than 3 mm. There shall be sufficient reinforcement, to provide level surfaces, resistance to vibrations and rigidity during transportation and installation.

8.4.59 Hinged doors shall be provided on both the front and back side for easy access. The door hinges shall be concealed type.

8.4.60 All doors and the removable covers and panels shall be shall be provided with non-deteriorating gaskets. Ventilating louvers shall have screens and filters. The screens shall be made of either brass or GI wire mesh.

8.4.61 All the live parts which are accessible after opening of door shall be properly insulated or provided with insulating barrier to prevent accidental contact. However, for the parts requiring handling normally, such as fuses/lamps etc. separate barriers shall be provided. The barriers in all cases shall cover the cable lug portions and shall be firmly secured, stable and durable. It shall, however, be possible to remove such barriers, if required

8.4.62 Adequate arrangement for earthing shall be provided to safeguard the operator or other personnel from electric hazards under all conditions of operation.

FORM NO: 02-0000-0021 F2 REV3 All rights reserved

8.4.63 The panel shall be designed for bottom entry for power and control cables. Sufficient space shall be provided for ease of connection and termination of cables

8.4.64 The termination of cables shall be done through heavy duty double compression type rolled aluminium/stainless steel cable glands of suitable size. The cable gland shall be mounted on a removable gland plate, provided at a minimum height of 200mm from the bottom of the panel. Two spare knock outs of size 20mm shall also be provided on the gland plate for future use.

8.4.65 A continuous earth bus of copper shall be run along the entire length of the lower part of the panel with two ends connected to the external earth terminals of the panel.

8.4.66 The cubicle shall be provided with a thermostatically controlled space heater rated for 240V, single phase, 50 Hz supply and controlled through double pole MCB.

8.4.67 Speed encoder for measuring actual speed of motor shall be provided.

8.4.68 All feedback related to motor status shall be based on VFD output contactor.

8.4.69 Alarm shall be initiated at PLC for motor running at speeds less than 30% of rated speed.

8.4.70 Control supply for VFD & associated switchgear shall be from external source.

8.4.71 Auto restart of VFD in the event of momentary power loss shall have disable feature too.

8.4.72 VFD motor shall be of inverter duty type.

8.4.73 Online monitoring of VFD via system generated email to user shall be provided.

8.4.74 Interface shall display reference speed & thermal content of motor.

8.4.75 4-20 mA transducer with dual output type for speed & current at PLC & LCS shall be provided.

8.4.76 Interfacing with PLC shall be properly established (potential free contacts for PLC command shall be provided).

8.4.77 Indication at PLC for motor running in bypass or VFD mode shall be provided.

8.4.78 VFD status (Run, OFF, Trip, Remote & Bypass) shall be provided to PLC & ECS in hardwired form from corresponding aux. contactors. Communication for all the VFD parameters shall be through modbus.

8.5 Local Control Stations

8.5.1 Local Control Stations shall be provided for all motors. All internal components shall be certified for use in hazardous areas.

All rights reserved

8.5.2 The enclosure for LCS shall be of Fiberglass Reinforced Thermoplastic (FRP) and shall be flameproof & weatherproof construction. A rain-hood shall be offered as an additional protection. Rain hood shall be of the same material as of the main enclosure. The enclosure shall be suitable for mounting on wall or on steel structure. 4 Nos. holes suitable for 12 mm bolts shall be provided outside the enclosure for fixing the control stations.

8.5.3 Provision for pad locking in OFF position shall be provided.

8.5.4 Local/Remote (Lockable) selector switch shall be single pole stay put type having three positions “LOCAL-OFF-REMOTE’’. Provision shall be made to padlock the switch in the OFF position

8.5.5 The LCS shall have provisions as indicated in specification sheet of LCS.

8.5.6 Local control stations for motors shall be provided with start push button, stop push buttons, L/R Switch and ammeters. Space Heater ON indication lamp shall be provided for motor rated 30KW and above. Indication lamp for ON, OFF, Motor Ready to Start shall be provided on LCS.

8.5.7 Each element for start and stop shall be provided with 1 NO + 1 NC contact. The push button construction shall be such to avoid mal-operation due to vibrations.

8.5.8 Stay put emergency stop push buttons shall be Mushroom head type.

8.5.9 All local control stations shall have weather proof IP-55 enclosure and be suitable for installation in relevant hazardous area, gas group and temperature class. Canopies of suitable size shall be provided with all local control stations.

8.5.10 Two numbers of LCS shall be provided for the motors, which are installed at elevated platforms. One shall be installed at ground level and the other near the motor.

8.5.11 The ammeter shall be flush mounting, moving iron spring controlled type, of accuracy class 1.5 as per IS: 1248, with square face of minimum size 72 mm x 72 mm having scale range 0-240 degree. The ammeter shall be provided with uniform scale up to CT primary current and compressed end scale up to the starting current of respective motor. Adjustable red pointer shall be provided to indicate the full load current of the motors. Zero adjusters shall be provided for operation from the front of the meter. All ammeters shall be operated through 1 Amp. CTs only.

8.5.12 For all other specifications, refer TS-8200.

8.6 Switch Sockets

8.6.1 Sufficient number of inter-locked type 63A, 415V, 3 Ph and 25A & 16A, 240V, 1 Ph switch sockets shall be provided in various plant locations as per hazardous area classification (if applicable) to facilitate the maintenance work.

FORM NO: 02-0000-0021 F2 REV3 All rights reserved

8.6.2 The switch socket shall be heavy duty industrial type. The interlocking arrangement shall be such that it is not possible to insert or withdraw the plug with the switch in 'ON' position.

8.6.3 The enclosure of switch sockets and plugs shall be of cast aluminium alloy 4600 and suitable for fixing on wall/structure. These shall have dust, hose and weatherproof construction conforming to IP55 and shall be suitable for outdoor use without any extra protection. Rain hood fabricated out of 14SWG aluminium sheet shall be provided as an additional protection. Suitable arrangement for looping of cables from one switch socket to the other shall be provided.

8.6.4 The external bolts and nuts shall be of stainless steel.

8.6.5 The complete enclosure shall be painted with one coat of anti rust epoxy based primer and two coats of acid resisting epoxy based primer and two coats of acid paints after necessary pre-treatment.

8.6.6 Three Phase switch sockets shall be provided at 50 M interval and 1 Phase at 25 M interval. Maximum 3 Nos. 63A switch sockets and 4 Nos. 16A switch sockets shall be connected in one circuit through suitably rated RCCB.

8.6.7 All the jointing surface shall be smoothly machined and of sufficient width to prevent ingress of dust. Further the covers shall be provided with continuous gaskets made of neoprene to prevent ingress of dust.

8.6.8 Following minimum cable sizes to be considered for individual switch sockets, however actual sizes shall be subject to approval of RFCL/PDIL satisfying the current and voltage drop criteria.

i) <u>For 25A Sw. Sockets</u>

Switch sockets: 3Cx25 sq. mm A2XFY cable for incoming and outgoing

Plug: 4Cx2.5 sq. mm flexible copper conductor cable

ii) <u>For 63A Sw. Sockets</u>

Switch sockets: 3.5Cx50 sq. mm A2XFY cable for incoming and outgoing

Plug: 4Cx2.5 sq. mm flexible copper conductor cable

8.6.9 The enclosure shall be provided with two nos. of earthing terminals outside of enclosure. Additionally one no earthing terminal shall also be provided inside the enclosure.

8.6.10 For all other specifications, refer TS-8120

FORM NO: 02-0000-0021 F2 REV3 All rights reserved

8.7 CABLE TRAYS

8.7.1 The cable trays and risers shall be of GI pre-fabricated ladder type as per attached TS-8161 & PDS: E 530 to 537.

8.7.2 GI pre-fabricated cable trays and its accessories such as coupler plates, risers, bends etc. shall be fabricated from 3.0 mm thick mild steel galvanised sheet. The rung spacing shall be 300 mm. The cable trays accessories shall be hot dip galvanized after fabrication. The galvanizing shall be uniform, clean, smooth, continuous and free from pores. The amount of zinc deposit at any point shall not be less than 610 gm per sq. metre.

8.7.3 The finished tray and accessories shall be free from sharp edges and corners, burrs and unevenness.

8.7.4 Each straight length and bed shall be supplied with two coupling plates fitted at each side channel at one end. The couplings plates shall be complete with bolts, nuts and washers fitted at other four holes for fixing to adjoining member. Coupling plate shall be designed to permit longitudinal adjustment up to ±10 mm and skew up to 10˚.

8.7.5 In paved areas/near the equipment, if required, the cables shall be laid in buried G.I. pipes. Protection shall be provided for rising cable with G.I. pipe for a minimum height of 300 mm above floor level.

8.7.6 All cables shall have their run nos. marked close to the termination as well as at intervals for proper identification.

8.7.7 All cables shall be terminated at the equipment by means of rolled aluminium/stainless steel heavy duty double compression type cable glands and crimping type lugs.

8.7.8 The cable racks shall be designed to avoid any sharp bends in the cable. The corners of cable racks shall be smooth with radius not exceeding six meters.

8.7.9 In case provision of inserts, grouting pockets and openings are required in floors, ceiling, and walls, the same shall be indicated by the vendor within four week of the placement of order. But in case it is necessary to cut modify these requirements or to furnish requirement beyond the above stipulated time, these shall have to carried out by the vendor at the site without any extra cost.

8.7.10 All the cable shall be properly laid and suitably clamped at regular interval. All cable racks/riser shall have 50% extra space for owner's future use.

8.7.11 Cable trays for power and control cable shall be separate, moreover cable tray size shall be selected based on single layers laying of cables with minimum 25% spare margin.

8.7.12 The width of cable trays shall preferably be 150, 300, 450, 600, 750 mm or in multiples thereof.

All rights reserved

8.7.13 The no. of tiers may be decided keeping a clear head clearance of 2.5 m inside the rooms, 6 m while crossing the main roads and 3 m while crossing the branch road. For multiplier racks the minimum gap between the two tiers and between top tier and ceiling shall be 300 mm.

8.7.14 The minimum sizes of various structural members used for supporting of cable racks shall be as follows:-

Members	Size of structural member	Maximum separating distance
	Channel angle	
Support 100x50	75X75X8	1.5 m
Runner	50x50x6 / 75X75X8	As per requirement

8.8 I/O RACK, DATA CONCENTRATOR, ETHERNET SWITCH ETC. FOR EXISTING ECS SYSTEM (HONEYWELL MAKE)

8.8.1 LSTK Contractor has to provide IO Panels with 20% spares. Supply of Multi-mode FO cable, Data Concentrator, Ethernet Switch and all associated accessories shall be in LSTK Contractor Scope. All hook up activities with existing ECS System (Honeywell make), programming, provisions of MCL, ICD, PSL etc. for Numerical relay as per RFCL requirement for mapping the feeder on RFCL existing ECS system of Honeywell make shall be in LSTK Contractor scope. All these relays shall communicate with RFCL existing ECS system through IEC 61850 protocol. If required LSTK Contractor has to mobilized Relay Engineer at RFCL Site.

8.8.2 Marshalling box fabricated out of 2.5 mm thick cold rolled sheet steel having dust and vermin proof construction equivalent to IP-52, provided with front cover with concealed type hinges and non-deteriorating neoprene gaskets. The IPB shall be complete with nickel brass terminals fitted on DMC terminal block, heavy duty double compression type rolled aluminium / stainless steel cable glands and two nos. external earthing terminals. Each terminal shall be suitable for terminating 2.5 sq. mm (Cu) conductor at both ends. After suitable pre-treatment of the surfaces, exteriors and interiors shall be provided with two coats of anti rust paint followed by 2 coats of epoxy based paint in shade 631 as per IS: 5.

8.8.3 I/O modules and CPU shall be of same manufacturer, make, same series and form factor.

8.8.4 I/O modules shall be of high density, modular, rack based and hot swappable Redundant Power supply shall be provided at each I/O Rack Level.

i. **Input / Output Modules**

- Input Output modules, as required for ECS for all type of field input signals viz. 4-20 mA, RTD, Thermocouple, non changeover/changeover type of contact inputs etc. and outputs from the control system viz. non changeover/changeover type of

All rights reserved

contacts, 24/48 V DC output signals for energizing interface relays, 4-20 mA output etc.

- Electrical isolation of 1.5 kV with optical couplers between the plant input/output and controller shall be provided on the I/O cards. The isolation shall ensure that any inadvertent voltage or voltage spikes (as may be encountered in a plant of this nature) shall not damage or mal-operate the internal processing equipment.

- The Input/output system shall facilitate modular expansion in fixed stages. The individual input/output cards shall incorporate indications on the module front panels for displaying individual signal status.

- Individually fused output circuits with the blower fuse indicator shall be provided. All input/output points shall be provided with status indicator. Input circuits shall be provided with fuses preferably for each input; alternatively suitable combination of inputs shall be done and provided with fuses such that for any fault, fuse failure shall affect the particular drive system only without affecting other systems.

- All input/output cards shall have quick disconnect terminations allowing for card replacement without disconnection of external wiring and without switching of power supply.

- Following monitoring features shall be provided:
  - Power supply monitoring.
  - Contacts bounce filtering.
  - Optical isolation between input and output signals with the internal circuits.
  - In case of power supply failure or hardware fault, the critical outputs shall be automatically switched to the fail-safe mode. The fail-safe modes to be considered shall be finalized during detailed engineering.

- Keying-in of individual wire connectors shall be provided to ensure that only the correct card is plugged on the I/O module. It shall be possible to remove I/O module without disconnecting wiring from field inputs or outputs.

- Atleast 20% spare capacity shall be made available on input, output and memory modules, over and above the system requirement.

- Binary Output modules shall be rated to switch ON/OFF coupling relays of burden 3 VA at 24 VDC (approx.) / actual requirement whichever is more. Analog ouput modules shall be able to drive load impedance of 500 Ohms minimum.

- Output module shall be capable of switching ON/OFF inductive loads like solenoid valves, auxiliary relays etc. without any extra hardware.

- All input field interrogation voltage shall be 24V DC or 48 V DC.

- In case of loss of I/O communication link with the main processing unit, the I/O shall be able to go to predetermined fail safe mode with proper annunciation.

FORM NO: 02-0000-0021 F2 REV3 All rights reserved

8.8.5 Separate terminal blocks shall be provided for

i. Connections from field equipment

ii. Inputs to PLC

iii. Outputs from PLC

iv. Inputs from / outputs to MV switchgear

v. Circuits / Signals carrying different voltages.

8.8.6 All digital input and outputs shall be through relays.

8.8.7 Design, Engineering, selection of system components and supply equipment / components / software shall be effected by bidder such that after completion of project and at the time of handing over:

i. 20% spare channels shall be available in each Input/Output card.

ii. 20% subject to min. 1 spare card (whichever is more) of each type are available in each I/O cabinet as spare.

iii. 20% spare slots / MTUs with dummy cards shall be available in each I/O cabinet.

iv. PLC loading shall be less than 50%.

v. All commands shall get executed instantaneously and without any visible delay.

vi. All cards (including spare and dummy cards) shall be wired up to terminal blocks.

8.8.8 20 port ethernet switch shall be provided along with I/O rack for communication to LMS.

8.8.9 ECS Typical I/O list is as below:

Equipment Description	Feeder Type	Information Type	Nature of Information	Information Description	Set Condition	Reset Condition	Interface	Range	Remarks
415VSWBD	INCOMER	AI	MEASURING	R phase current			RELAY LAN		
415VSWBD	INCOMER	AI	MEASURING	Y phase current			RELAY LAN		
415VSWBD	INCOMER	AI	MEASURING	B phase current			RELAY LAN		
415VSWBD	INCOMER	AI	MEASURING	3-phase real power			RELAY LAN		
415VSWBD	INCOMER	AI	MEASURING	3-phase reactive power			RELAY LAN		
415VSWBD	INCOMER	AI	MEASURING	Power Factor			RELAY LAN		
415VSWBD	INCOMER	DI	STATUS	CB in service & closed	Closed	Not closed	HARDWIRED		
415VSWBD	INCOMER	DI	STATUS	CB in service & closed	Open	Not open	HARDWIRED		
415VSWBD	INCOMER	DI	STATUS	Relay 86	Operated	Reset	RELAY LAN		
415VSWBD	INCOMER	DI	STATUS	Relay 95	Operated	Reset	RELAY LAN		
415VSWBD	INCOMER	DI	STATUS	Trip on under voltage	Activated	Reset	RELAY LAN		
415VSWBD	INCOMER	DI	STATUS	Numerical Relay	Unhealthy	Healthy	RELAY LAN		
415VSWBD	INCOMER	DO	COMMAND	Trip from ECS	Activated	Reset	HARDWIRED		
415VSWBD	INCOMER	DO	COMMAND	Close Inhibit (from ECS due to load shedding)	Operated	Reset	HARDWIRED		
415VSWBD	LINE PT	AI	MEASURING	R-Y Line Voltage			RELAY LAN		
415VSWBD	LINE PT	AI	MEASURING	Y-B Line Voltage			RELAY LAN		

 All rights reserved

Equipment Description	Feeder Type	Information Type	Nature of Information	Information Description	Set Condition	Reset Condition	Interface	Range	Remarks
415VSWBD	LINE PT	AI	MEASURING	R-B Line Voltage			RELAY LAN		
415VSWBD	LINE PT	DI	STATUS	line PT Secondary MCB	Tripped=1		HARDWIRED		
415VSWBD	BUS COUPLER	AI	MEASURING	R phase current			RELAY LAN		
415VSWBD	BUS COUPLER	AI	MEASURING	Y phase current			RELAY LAN		
415VSWBD	BUS COUPLER	AI	MEASURING	B phase current			RELAY LAN		
415VSWBD	BUS COUPLER	AI	MEASURING	3-phase real power			RELAY LAN		
415VSWBD	BUS COUPLER	AI	MEASURING	3-phase reactive power			RELAY LAN		
415VSWBD	BUS COUPLER	AI	MEASURING	Power Factor			RELAY LAN		
415VSWBD	BUS COUPLER	DI	STATUS	CB in service & closed	Closed	Not closed	HARDWIRED		
415VSWBD	BUS COUPLER	DI	STATUS	CB in service & closed	Open	Not open	HARDWIRED		
415VSWBD	BUS COUPLER	DI	STATUS	Relay 86	Operated	Reset	RELAY LAN		
415VSWBD	BUS COUPLER	DI	STATUS	Relay 95	Operated	Reset	RELAY LAN		
415VSWBD	BUS COUPLER	DI	STATUS	Trip on under voltage	Activated	Reset	RELAY LAN		
415VSWBD	BUS COUPLER	DI	STATUS	Numerical Relay	Unhealthy	Healthy	RELAY LAN		
415VSWBD	BUS COUPLER	DO	COMMAND	Trip from ECS	Activated	Reset	HARDWIRED		
415VSWBD	BUS COUPLER	DI	STATUS	Auto-changeover	Blocked	Not blocked	HARDWIRED		
415VSWBD	BUS COUPLER	DI	STATUS	Switchboard (A-I-M selector switch)	Auto	Not _Auto	HARDWIRED		
415VSWBD	BUS COUPLER	DI	STATUS	Switchboard (A-I-M selector switch)	Independent	Not_Independent	HARDWIRED		
415VSWBD	BUS COUPLER	DI	STATUS	Switchboard (A-I-M selector switch)	Manual	Not Manual	HARDWIRED		
415VSWBD	BUS COUPLER	DI	STATUS	AC control supply #1	Failed	Healthy	HARDWIRED		
415VSWBD	BUS COUPLER	DI	STATUS	AC control supply #2	Failed	Healthy	HARDWIRED		
415VSWBD	BUS COUPLER	DI	STATUS	DC control supply #1	Failed	Healthy	HARDWIRED		
415VSWBD	BUS COUPLER	DI	STATUS	DC control supply #2	Failed	Healthy	HARDWIRED		
415VSWBD	BUS COUPLER	DI	ALARM	AC space heater supply# 1	Failed	Healthy	HARDWIRED		
415VSWBD	BUS COUPLER	DI	ALARM	AC space heater supply# 2	Failed	Healthy	HARDWIRED		
415VSWBD	BUS COUPLER	DO	COMMAND	Close Inhibit (From ECS) due to load shedding	Operated	Reset	HARDWIRED		
415VSWBD	BUSPT	AI	MEASURING	R-Y Line Voltage			RELAY LAN		
415VSWBD	BUSPT	AI	MEASURING	Y-B Line Voltage			RELAY LAN		
415VSWBD	BUSPT	AI	MEASURING	R-B Line Voltage			RELAY LAN		
415VSWBD	BUSPT	DI	STATUS	Bus PT Secondary MCB	Tripped=1		HARDWIRED		
415VSWBD	OUTGOING FOR (ACB)	AI	MEASURING	R phase current			RELAY LAN		
415VSWBD	OUTGOING FDR (ACB)	AI	MEASURING	Y phase current			RELAY LAN		
415VSWBD	OUTGOING FDR (ACB)	AI	MEASURING	B phase current			RELAY LAN		
415VSWBD	OUTGOING FOR (ACB)	AI	MEASURING	3-phase real power			RELAY LAN		
415VSWBD	OUTGOING FOR (ACB)	AI	MEASURING	3-phase reactive power			RELAY LAN		
415VSWBD	OUTGOING FOR (ACB)	AI	MEASURING	Power Factor			RELAY LAN		
415VSWBD	OUTGOING FOR (ACB)	DI	STATUS	CB in service & closed	Closed	Not closed	HARDWIRED		
415VSWBD	OUTGOING FDR (ACB)	DI	STATUS	CB in service & closed	Open	Not open	HARDWIRED		

All rights reserved

Equipment Description	Feeder Type	Information Type	Nature of Information	Information Description	Set Condition	Reset Condition	Interface	Range	Remarks
415VSWBD	OUTGOING FDR (ACB)	DI	STATUS	Relay 86	Operated	Reset	RELAY LAN		
415VSWBD	OUTGOING FDR (ACB)	DI	STATUS	Relay 95	Operated	Reset	RELAY LAN		
415VSWBD	OUTGOING FDR (ACB)	DI	STATUS	Trip on under voltage	Activated	Reset	RELAY LAN		
415VSWBD	OUTGOING FDR (ACB)	DI	STATUS	Numerical Relay	Unhealthy	Healthy	RELAY LAN		
415VSWBD	OUTGOING FOR (ACB)	DO	COMMAND	Trip from ECS	Activated	Reset	HARDWIRED		
415VSWBD	OUTGOING FOR (ACB)	DO	COMMAND	Close Inhibit (From ECS) due to load shedding	Operated	Reset	HARDWIRED		
415VSWBD	OUTGOING FOR (ACB)	DI	STATUS	Motor Trip from Process	Operated	Reset	RELAY LAN		Only for motor feeders
415VSWBD	O/G Contactor feeder	DI	STATUS	Feeder OFF	OFF	ON	HARDWIRED		
415VSWBD	O/G Contactor feeder	DI	COMMAND	Remote Trip from ECS	Activated	Reset	HARDWIRED		
415VSWBD	O/G Contactor feeder	DO	COMMAND	ON inhibit due to load shedding	Activated	Reset	HARDWIRED		
415VSWBD	O/G Contactor feeder	DI	STATUS	Feeder ON	ON	OFF	HARDWIRED		
MISC	MISCELLANEOUS	DO	COMMAND	Lighting feeder 'ON'	Activated	Reset	HARDWIRED		
MISC	MISCELLANEOUS	DO	COMMAND	Lighting feeder 'OFF'	Activated	Reset	HARDWIRED		

8.8.10 20% spare DI, DO & AI shall be considered for owner's future use.

9.0 CABLING

9.1.1 All power and control cables as specified shall be supplied and laid by the bidder. Terminations at switchgear end and at the equipment end shall be in bidder's scope. Supporting and laying of these cables shall also be in bidder's scope. Termination of cables at motor end and at switchgear end.

9.1.2 Cables shall be sized considering the following factors.

- Maximum continuous load current
- Voltage drop
- System voltage
- Laying conditions
- Derating due to ambient air temperature, ground temperature, grouping and proximity of cables with each other, thermal resistivity of soil etc. shall be taken into account
- Short circuit withstand criteria for vacuum contactor controlled LT motors

9.1.3 All LT power cables shall be with stranded aluminium/copper conductor with XLPE insulation, PVC inner sheathed, armoured, PVC outer sheathed FRLS type and construction as per IS: 7098 (Part 1). Power cables with conductor size upto and including 6 sq. mm shall be with copper conductor, conductor size above 6 sq. mm shall be aluminium conductor.

All rights reserved

9.1.4 All control cables shall be with 2.5 sq. mm, stranded copper conductor with XLPE insulation, PVC inner sheathed, armoured, PVC outer sheathed FRLS type and construction as per IS: 7098 (Part 1). Control cables shall be twisted pair or shielded wherever electro-magnetic/electrostatic interference is anticipated.

9.1.5 All control cables shall have 20% spare cores. All cores shall be identified with numerical core numbers printed on core instead of colours.

9.1.6 All cables shall be armoured and shall have extruded inner and outer sheath.

9.1.7 Cables connected in parallel shall be of the same type, cross section and terminations.

9.1.8 All power and control cables shall be in continuous lengths (except for very long feeders) without any joints. The cables used for lighting and wires in conduits shall have appropriate junction boxes with adequately sized terminals. Cable joints in hazardous areas shall not be permitted.

9.1.9 The maximum voltage drops in various sections of the electrical system shall be within limits stated in the following table:

Sr. No.	System Element	Maximum Permissible Voltage Drop
1.	Cables between PMCC and other PMCC/ EPMCC or auxiliary switchboard i) Location of switchboard: Near PMCC/EPMCC ii) Location of switchboard: Remote	 0.5 % 2.5 % (Max.)
2.	Maximum Voltage drop up to LT motor terminal: During running condition During starting condition	 5 % 10 %
3.	Cables between auxiliary switchboard and lighting panel	Max. 1.5 %
4.	Circuit between lighting panels and lighting points	4 %
5.	DC supply circuits/UPS circuits	5 % and/or as per instrumentation requirement

9.1.10 **Design Criteria for Cables & Short Circuit Withstand Time**

a) Design criteria for cables

Sr. No.	Design Criteria	415V
1.	Loads beyond 1000A rating	Cable/Bus duct
2.	Loads located beyond 1 KM	N.A.
3.	Loads located up to 1000 M	Cable

FORM NO: 02-0000-0021 F2 REV3 All rights reserved

4.	Recommended limiting size of multi-core cable (mm^2)	4 Core x 300
5.	Insulation voltage grade	1100V suitable for earthed and unearthed system
6.	Type of cable insulation	Power: XLPE Control: XLPE

Suitable derating factors based on the site ambient conditions, method of laying and the no. of cables laid together shall also be applied.

b) Short circuit withstand time (seconds) shall be as follows for Breaker controlled/vacuum contactor controlled feeders.

Feeders to motors	0.25 sec
Feeders from PMCC to PMCC/EPMCC	0.5 sec

9.1.11 The minimum size of power cables shall be 2.5 sq. mm (Cu).

9.1.12 The control cables shall be 2.5 sq. mm (Cu). However, wiring in the panel/switch boards may be by means of 1.5 sq. mm (Cu) cables except for CT wiring which shall be 2.5 sq. mm.

9.1.13 Minimum size of power cables for motors shall be as follows:

Sl. No.	Rating	Cable Size
1.	Motors up to 3.7 KW	1.1 KV, 3x4 mm^2 (Cu)
2.	Motors above 3.7 KW and up to 9.3 KW	1.1 KV, 3x10 mm^2 (Al)
3.	Motors above 9.3 KW and up to 15 KW	1.1 KV, 3x25 mm^2 (Al)
4.	Motors above 15 KW and up to 25 KW	1.1 KV, 3x35mm^2 (Al)
5.	Motors above 25 KW and up to 30 KW	1.1 KV, 3x50mm^2 (Al)
6.	Motors above 30 KW and up to 55 KW	1.1 KV, 3x120mm^2 (Al)
7.	Motors above 55 KW and up to 75 KW	1.1 KV, 3x185mm^2 (Al)
8.	Motors above 75 KW and up to 90 KW	1.1 KV, 3x240mm^2 (Al)
9.	Motors above 90 KW and up to 150 KW	1.1 KV, 2-3x240mm^2 (Al)

9.1.14 Minimum size of cables used for switch sockets shall be as follows:

Sl. No.	Rating	Cable Size
1.	63A Switch Sockets	3.5x50mm^2 (Al)
2.	16A Switch Sockets	3x2.5 mm^2 (Cu)

9.1.15 LSTK Contractor shall submit the sizing calculations for cable same shall be subject to review/approval by RFCL/PDIL.

9.1.16 The cables shall be generally laid on overhead trays. These trays shall have proper supporting arrangement (rack) pipe racks, wherever available shall be used as cable rack to support the cable trays.

All rights reserved

9.1.17 For all other specifications, refer TS-8160.

9.2 **Cable Laying**

9.2.1 The cables shall be laid on overhead racks to the extent possible. Pipe racks of the plant may be used to support the cable racks. Where pipe racks are not available separate structure shall be provided by the LSTK Contractor.

9.2.2 The cable racks shall be ladder type, pre-fabricated from suitable hot dip galvanised steel.

9.2.3 HT power cable shall be laid on cable tray in single layer having 1D spacing between the cables. LT power cable & space heater cable shall be laid on cable tray in single layer in touching formation. Control cable shall be laid on cable tray in single layer in touching formation. FO cable (Electrical application) laying shall be as per Design Philosophy-Instrumentation attached with the NIT.

9.2.4 Following minimum clearance to be maintained for lowermost tier (B.O.T.) of cable trays in all cable tray installation:

a. 2700 mm above FGL for overhead cable trays.

b. 300 mm above FGL for cable trays installed along with pipe sleepers.

c. 7000 mm above FGL at road crossing.

9.2.5 Cable tray horizontal support shall be provided at every 2 meter & vertical support shall be provided at every 1 meter.

9.2.6 3 mm thick tray cover allowing adequate ventilation shall be provided.

9.2.7 All cables shall be terminated using suitable cable lugs.

9.2.8 For all other specification of cable racks, refer PDS attached.

10.0 ILLUMINATION SYSTEM

10.1 General

10.1.1 In general, the lighting shall be provided by fixtures using LED High Mast, LED flood light, LED high bay light, LED tube-light, LED bulkhead, LED well glass etc. The minimum illumination levels and type of fixtures in the various sections of the plants shall be as indicated in Annexure-1.

10.1.2 Bidder shall calculate the qty. of lighting fixtures as per desired Lux Level which shall be subject to RFCL/PDIL approval.

10.1.3 One-third lighting load shall be connected to the emergency power to provide certain light during failure of normal power.

FORM NO: 02-0000-0021 F2 REV3 All rights reserved

10.1.4 All outdoor lighting fixtures including Aviation light shall receive power from outdoor lighting bus.

10.1.5 All outdoor Lighting Fixtures including Aviation Light, Junction Box & Interlocking Switch Socket & Plug shall be suitable for outdoor installation and shall have min. IP66 degree of protection.

10.1.6 Auxiliary components of the fixtures such as clips, hinges, catches, screws, nuts & bolts etc. shall be made of stainless steel.

10.1.7 Only neoprene gaskets of uniform thickness shall be used for dust proofing.

10.1.8 The specified illumination level shall be maintained after considering maintenance factor of 0.6 for plant and outdoor areas and 0.7 for indoor areas and utilization factors as per manufacturers catalogues for the size of room and type of fixtures.

10.1.9 Normally minimum mounting height of the LED fixtures shall be as follows:-

Wattage of LED	Mounting Height
20W	2.5 M / 3.0 M
24W	3.2M / 4.0 M
48W	3.2 M / 5.0 M / 6.0 M
120W	6.0 M / 8.0 M

10.1.10 Platform lighting shall be installed such that operators are not blinded nor are bordered by their own shades.

10.1.11 LED Panic lights, shall be fed from 220V DCDB. Panic lights shall be provided at convenient locations in all plants for safe evacuation of operation personnel. These shall be switched ‘ON’ automatically on failure of power supply to main lighting board and shall switch ‘OFF’ automatically after restoration of power supply. Testing facility of these lights shall be provided. Location of these lights shall be judiciously decided from safety considerations (such as ladder, transfer points etc).

10.1.12 Aviation lights (LED type) shall be provided on tall structures and all isolated structures more than 45M height.

10.1.13 Twin cluster LED type medium intensity flashing lamps as per aviation regulation and norms shall also be provided for tall structures and all isolated structures more than 45m height.

10.1.14 For lighting fixtures and 16 A plug socket circuits, 3Cx2.5 sq. mm (Cu) cable shall be used.

10.1.15 The lighting Sub-Distribution Board for control of lighting shall be standardized as 18 ways, 12 ways, 9 ways and 6 way type.

10.1.16 16A plug sockets shall be fed through separate circuit of lighting sub-distribution boards/ junction box.

10.1.17 Normally 4 Nos. of 16A plug sockets shall be connected to a circuit.

FORM NO: 02-0000-0021 F2 REV3 All rights reserved

10.1.18 Plant lighting circuits shall be single phase (Phase & Neutral) rated 240V AC. Each circuit shall be rated to 16A but not loaded more than 8A. Minimum of 25% of MCBs of each board shall be left as spares. Normally about 8-10 fittings shall be wired in each circuit & the load on one lighting sub-circuit of lighting sub-distribution board and junction box shall be limited to 500W approx.

10.1.19 In plant area, wall mounting boards shall be installed to control the lighting. These boards shall include switches for lights, 16A/5A plug sockets etc.

10.1.20 Power factor of complete fitting shall be 0.95 min. at 230 V.

10.1.21 The luminaries shall provide with suitable heat sink arrangement to ensure effective heat dissipation.

10.1.22 Lights from LED's shall be soothing to eye and without any bright spots on the floor/ objects illuminated by the luminaries.

10.1.23 The driver shall be mounted internally and be replaceable with the aid of commonly available hand tools.

10.1.24 The LED module or array shall be designed in such a way that the failure of one LED shall not affect additional LED's.

10.1.25 LED Luminaries shall be suitable for single phase 230V ± 10%, 50Hz ± 10% AC input and ambient condition indicted elsewhere in ITB.

10.1.26 Life expectancy of LED Luminaries shall be minimum of 50000 hrs. with greater than 70% of rated lumen output.

10.1.27 Min. efficiency of LED driver: The minimum efficiency of LED driver shall be 85% for driver power output rating <=40W and 87% for driver power output rating> 40W.

10.1.28 Short circuit protection / Open load protection shall be required for LED fixtures.

10.1.29 Surge Protection for minimum 2kV for indoor and minimum 3kV for Outdoor LED systems shall be provided. However, if a site is prone to lightning and surges 10kV surge protection shall be required. In case of outdoor luminaires, the Surge Protection Device (SPD) shall be series type with fail safe.

10.1.30 Color temperature of LED Luminaries: 5700K

10.1.31 Cover type for outdoor type fittings shall be Toughened glass or UV stabilized polycarbonate whereas, for indoor and non-weather proof items, UV stabilized Poly Carbonate can be used.

10.1.32 All LED light shall have 5 years replacement warranty.

10.1.33 Power sockets & Air Conditioning supply shall not be given from lighting circuit.

10.1.34 All indoor lights shall be switch controlled except for DC critical lighting.

 All rights reserved

10.1.35 Stencilling shall be done on all Lighting JB & Lighting Poles.

10.1.36 RCCB protection shall be provided for all circuits in Normal & Emergency Lighting Distribution Board.

10.1.37 63A TPN outlet from outdoor lighting bus of main lighting board shall be taken direct to the TPN junction box to be mounted on pole through cable and looped from pole to pole.

10.1.38 Hot dip GI octagonal poles of suitable mounting height shall be used for street light (if required within plant battery limit). However, for plant lighting (platforms / structures / access ways / walk ways / pump house / pump bay etc.), steel tubular poles of suitable mounting height (3m / 5m) shall be used.

10.1.39 Zinc coating shall be done by hot dip galvanising process as per IS: 2629 and shall be min. 610 gm/sq. metre.

10.1.40 The poles shall be subjected to min. following tests:

- Thickness of galvanising
- Drop test as per IS: 2713.
- Deflection test as per IS: 2713.

10.1.41 For more details, refer PDS attached.

11.0 EARTHING AND LIGHTNING PROTECTION

11.1 Earthing

11.1.1 Complete earthing installation shall be done as per IS: 3043.

11.1.2 Two strips shall be provided for main earth grid to ensure reliability.

11.1.3 Complete earthing grid & Earth Pit/Lightning Earth Pit for the package plant area and its connection at two points to Owner's earthing grid shall be in bidder's scope.

11.1.4 All non-current carrying parts of various equipment as well as cable armouring, metallic conduit, G.I. pipe, cable racks/trays, brackets, supporting structure etc. shall be effectively earthed.

11.1.5 For equipment earthing, the conductor shall be single core PVC insulated aluminium cables.

11.1.6 As far as possible, the earth conductors shall be taken along Power & control cable routes.

11.1.7 Earthing conductors buried under the ground shall be laid atleast 500 mm below the ground level unless required otherwise, e.g. for crossing any underground pipe or

All rights reserved

trench etc. where the earthing conductors shall run at a minimum depth 300 mm below the bottom of the pipe/trench.

11.1.8 Tapping from the underground earth grid shall be taken only from the earth pit or a pit without electrode to be provided for this purpose.

11.1.9 Earth pits for equipment earthing, system neutral earthing & lightning protection shall be separate. However, these pits shall be interconnected.

11.1.10 The earth conductors shall be protected against mechanical damage and corrosion particularly at the point of connection to earth terminals of equipment and accessories. Jute covering at welded points of earth strips. Welded joints shall be protected by applying epoxy resin or bituminous paint.

11.1.11 Earthing rings shall be provided around plants which in turn shall be connected to the common earthing grid. Minimum size of main grid for Plant area shall be 75mmx10mm.

11.1.12 Earthing grid/ring shall comprise of buried GI earth strips and GI pipes/electrodes. Spacing between two earth electrode shall not be less than 10 m and may be located 4m away from the building.

11.1.13 Separate earth electrodes shall be provided for system neutral earthing. For equipment earthing, minimum two numbers of electrodes shall be provided around each section of plant. However, all these earth electrodes shall be inter-connected.

11.1.14 Inter-connecting pits having an earth bus in an enclosed brick chamber without earth electrode shall be provided in the common underground earthing grid for convenience of taking earth conductors inside the plants.

11.1.15 As far as possible, the reinforcement rods inside concrete column shall be connected to the earthing grid/ring to reduce the overall earth resistance.

11.1.16 Individual electrical equipment shall be earthed by GI strip/GI wire/Cu/Al cable. Earth buses shall be provided in plants for earthing groups of electrical/non-electrical equipment to earthing grid/rings.

11.1.17 Size of earthing grid/ring and earth conductors of equipment for generating station and sub-stations, shall be as per relevant standards. The fault current magnitude shall be decided based on system fault level. The time duration shall be taken as 1 second.

11.1.18 All equipment rated above 250V shall have two external earth connections and those rated up to 250V shall have one external earth connection. However, for lighting fixtures, earthing shall be provided through armouring of cables. If unarmoured cables are used for lighting then dedicated cable core shall be used for earthing.

11.1.19 All steel structures, tanks, vessels, pipes, pipe joints, valves etc. shall be earthed against static charge accumulation by 50x6mm GI strip. The no. of earth connections shall be as follows :

All rights reserved

Equipment having diameter	Hazardous area	Non hazardous area
30 M	2	2
More than 30 M	3	2

11.1.20 Wherever process equipments are mounted on steel structures, the structures shall be earthed instead of earthing the individual equipment.

11.1.21 The pipe structures shall be earthed at not more than 25M apart.

11.1.22 For all equipment in hazardous area, in addition to external earthing one internal earthing shall be provided.

11.1.23 The cable sheath and armour shall be bonded to the earthing system as per IS: 1255. Metal pipes and conduits through which the cables run shall be effectively bonded and earthed.

11.1.24 All cables racks and risers shall be provided with a continuous earth strip and this strip shall be earthed by two distinct earth connections. Cable racks/risers/trays shall be electrically continuous by bonding the joints between the runner members of the adjacent sections. The cable tray shall also be connected to the earthing grid at suitable interval.

11.1.25 All underground connections for the earthing system shall be brazed / welded. Connection to the equipment and device shall be normally of the bolted type. Normally no joints shall be made. However if unavoidable the jointed portion shall be painted with epoxy paint and PVC sleeved afterwards.

11.1.26 The grounding conductors shall be GI or aluminum but these buried in the ground shall be either GI or aluminum with PVC gasket.

11.1.27 The ground conductors shall be protected against mechanical damage and corrosion particularly at the point of connection to earth terminals of equipment.

11.1.28 Minimum sizes of earth conductors to be used shall be as given below. However, vendor to calculate the actual size :-

Sl.No.	Equipment	GI conductor size	Al conductor size (cable)
1.	LV switch board	50mmx8mm	150 sq. mm
2.	Motors rated 75 KW and above	--	150 sq. mm
3.	Motors rated 30 KW to less than 75 KW	--	95 sq. mm
4.	Motors rated 5.5 KW to less than 30 KW	--	25 sq. mm
5.	Motors less than 5.5 KW	--	6 sq. mm
6.	All minor equipment rated 250V & below	--	6 sq. mm

All GI conductors shall meet the galvanizing requirement as per IS. For equipments installed in field like motors, LCS, control panels, distribution boards etc. Aluminium

All rights reserved

cable of suitable size as specified in above table shall be used instead of GI conductor.

11.2 **Lightning Protection**

11.2.1 All structure shall be protected against lightning strokes by suitable lightning protection system to be designed and installed as per latest edition of IS/IEC-62305.

11.2.2 The number of down conductors shall be minimum two. Each down conductors shall be provided with testing point.

11.2.3 Cable sheath, metal conduits, casing etc shall not be connected to lightning protection.

11.2.4 Minimum 2m separation shall be maintained between the other electric conductor and lightning protection system.

11.2.5 Minimum sizes of lightning protection conductors sizes shall be 25.4x3.18mm Aluminium strip above ground and 32x6 mm GI strip below ground.

11.2.6 Bare metallic structures shall not have any air termination rods at the top. The earth connections shall be welded to the bottom of structure at 300 mm above floor level. However, tall metallic columns with insulation at top shall be provided with air termination rods. Separate earth electrodes shall be provided for each down conductor of lightning protection. However, these shall be inter-connected with the other electrodes in main grid.

12.0 SPARES

12.1 LSTK Contractor shall supply mandatory spares for electrical equipments for operation and maintenance shall be as specified elsewhere in this bid package.

12.2 All spare parts shall be identical to the parts used in the equipments.

12.3 Any other spare parts or special tools not specified, but required, shall also be quoted along with the offer.

13.0 TESTING & INSPECTION

13.1 Testing of electrical equipments shall be done in accordance with relevant IEC/BIS codes.

13.2 The bidder shall submit the certificates of type tests performed on identical equipment as evidence of the compliance of the equipment with the type tests.

13.3 The bidder shall submit the certificates of routine and acceptance tests conducted on the purchased equipments.

13.4 All the routine/acceptance tests shall be performed at the manufacturer's works in the presence of owner's representative.

 All rights reserved

13.5 The owner or their representative shall be allowed to visit the manufacturing works for stage inspection during manufacturing stage.

13.6 The bidder shall intimate the owner 4 weeks in advance of the tests and submit the detailed schedule of tests.

14.0 VENDOR LIST

14.1 Make of all electrical equipment shall be as per vendor list enclosed in this bid package, if any other electrical item which is not covered in vendor list enclosed with this bid package shall be subject to PDIL/RFCL's approval.

15.0 INSTALLATION, TESTING AND COMMISSIONING

15.1 The bidder shall undertake installation of all electrical equipment in accordance with latest code of practices, in conformity with recommendation of the respective equipment manufacturers, drawings approved by the owner or owner's representative, direction of engineer-in-charge, statutory regulations and to the entire satisfaction of the owner.

15.2 The bidder shall arrange all the necessary erection tools and tackles, testing and measuring instruments and shall supply the required erection materials including structural steel.

15.3 All testing equipments shall be in vendor's scope and shall have valid calibration certificate.

15.4 Lux meter for checking the Lux level of illumination system.

15.5 No load and Load Trial of all motors shall be done. NDT reports shall be fair for acceptance.

15.6 Testing of all switchgears including distribution boards, ACB, Relay & MFM installed in the switchboards & distribution boards installed at RFCL site shall be in vendor's scope.

15.7 Bidder shall furnish field inspection and test data sheets for all equipments for owner's approval.

15.8 The bidder shall obtain the necessary certificate of compliance/completion certificate with test results from statutory authorities as required. All necessary drawings and test certificates as required by them shall be furnished by the vendor.

15.9 Atleast following tests shall be specifically conducted before commissioning in presence of owner's representative. All the test results shall be recorded and submitted to the owner.

a) Insulation Test
b) Continuity Test
c) High Voltage Test

All rights reserved

d) Simulation Test

e) Earth Resistance Test

16.0 COORDINATION WITH OTHER BIDDERS

16.1 All civil works connected with electrical installation shall be under the bidder's scope.

16.2 Proper approach to all the installation for O&M activities.

16.3 Acid resistant paint on all Motors, LCS, Earthing Strips, Motor foundation base and LCS structure in order to protect against corrosion due to acidic environment in Acid Dosing Area.

17.0 TRAINING

17.1 Training shall be imparted to owner's personnel at manufacturer's works as under:

a) LV switchboard: Two engineers for one week.

b) Variable Speed Drive: Two engineers for one week.

18.0 DEVIATIONS

Deviations, if any from this standard (clause wise) shall be clearly indicated in the offer with reasons thereof. In the absence of any such deviation the compliance to the clauses shall be deemed automatically.

19.0 DRAWING & DOCUMENTS

19.1 The bidder shall submit the documents for electrical equipments as per the drawing and documentation list enclosed with this bid package.

19.2 All drawings and documents shall have the following descriptions written boldly:

-- Name of Client.

-- Name of Consultant i.e. PDIL.

-- Enquiry / Order Number with Project/Plant name.

-- Equipment Code No. and Description.

19.3 At the time of handing over of the installation, the vendor shall supply as built drawings taking into consideration the actual execution carried out at site.

19.4 The vendor shall furnish a Bill of Materials covered in their offer. However, this shall be treated for information only and shall not absolve him from his obligation to supply the required items and quantities for making the plant complete as per intent of the specification.

19.5 Drawings and documents shall be submitted as per Drawing & Document list enclosed with NIT in number of copies as indicated below:

i) With bid: 4

ii) For approval: 4

iii) For information: 4

 All rights reserved

ANNEXURE-I
ILLUMINATION LEVELS & TYPE OF FIXTURES

Minimum illumination levels and type of fixtures to be used for various areas shall be as follows: Wattage of LED fixture is tentative and may be changed to meet LUX requirement and necessary calculations shall be furnished during detailed engineering for review / approval.

S. No.	AREA	LUX	TYPE OF FIXTURES
1.0	**ROADS**		
1.1	Plant roads	15	90W LED street lighting fixtures
1.2	Security roads	6	90W LED street lighting fixtures
2.0	**YARD**		
2.1	Marshalling yard	12	90/125W LED flood light
2.2	Loading/unloading areas	15	90/125W LED flood light
2.3	Open areas	5	90/125W LED flood light
3.0	**PLANT**		
3.1	Operating platforms	100	50W LED
3.2	Non-operating platform/ general process areas & walk ways	50	50W LED/ 2X18W LED
3.3	Pump house/Pump bay	150	90/125W LED
4.0	**CONTROL ROOMS**		
4.1	Front of panel	400	2x18W Recessed Mounting Decorative LED
4.2	Back of panel	200	2x18W Recessed Mounting Decorative LED
5.0	**STAIRCASE & ENTRANCE**		
5.1	Safe areas	100	2x18W LED
5.2	Hazardous areas	100	90W LED
6.0	Outdoor/Building Periphery	50	45/90W street lighting LED fixtures
7.0	PANIC LIGHTING		18W LED suitable for 220V DC supply

All rights reserved

SPECIFICATION SHEET
415V SWITCHBOARS

CLIENT: M/s RFCL, Ramagundam	**PROJECT**: Implementation of ZLD Unit	**PLANT**: ZLD	
ISSUED FOR : PROPOSAL ☐	ENQUIRY ☒	ORDER ☐	FINAL ☐
GENERAL		**AMBIENT CONDITION**	
Ref. Stds. : IS / IEC		Temp: - Max./Min./Design Ref.: 47.5 / 8.4 / 50°C	
Encl. Docs. : TS - 8060		Relative Humidity : 100%	Alt. above sea Less than 1000 m
Make :		**Atmospheric Pollution**	Dusts :Urea Dust
Maker's Type :			Vapour : Ammonia Vapour
		Location	Indoor ☒ / Outdoor ☐
			Gr. Floor ☐ / 1st floor ☒
Addl. Scope :	Erection & Comm. ☒	Supervision of Erection Comm. ☒	
TESTS: Routine ☒	Type ☐	Others ☐	

BASIC DATA

TAG NO. & QTY.	Item No.		
	Description		PMCC/EPMCC
	Code No.		
REFERENCE DRAWINGS	Single Line Diagram		BIDDER TO PROVIDE
	Feeder Details		BIDDER TO PROVIDE
	Auto Trip Alarm Scheme		BIDDER TO PROVIDE
	Non Trip Alarm Scheme		BIDDER TO PROVIDE
	Trip Ckt. Supervision Scheme		BIDDER TO PROVIDE
	Auto C/O Scheme		BIDDER TO PROVIDE
	P.T. Bus Arrangement		BIDDER TO PROVIDE
SYSTEM DETAILS	Nominal Voltage with Variation		415V ± 10%
	Rated Frequency with Variation		50 Hz ± 3%
	Combined V & F Variation		± 10%
	No. of Phases & Wires		3 PHASE 4WIRE
	Insulation Level		2.5 KV
	Fault Level		50KA
	Earthing Mode		SOLID EARTHING
BUS BARS	**Rating**	Continuous	BIDDER TO PROVIDE
		Short Time for 3 sec.	50 KA
	Bare / Insulated		INSULATED
	Type of Insulation		PVC SLEEVED
EXECUTION	**Breaker Feeders**	I/C B& B/C: ST/DT	ST
		Others : ST/DT	DT
	Other Feeders	Single front / Double front	ACB/Vacuum Contactor feeder single front other feeders double front
		Fixed / Drawout	Drawout
	Cable Entry : Top / Bottom		Bottom
	Bus Duct Entry : Top / Bottom		Not Applicable
	Accessibility : Front / Back		Front / Back
CONTROL SUPPLY	Breaker Feeders	Closing & Indication	220V DC
		Tripping	220V DC
	Contactors		240V AC
	Space Heater		240V AC
MISC. DATA	**Painting**	Type	EPOXY
		Shade	SHADE 631 OF IS 5
	Period for which Spares required		2 YEARS as per attached List

All unfilled data shall be filled in by the bidder.
ST- SINGLE TIER, DT- DOUBLE TIER

All rights reserved

TECHNICAL PARTICULARS
415V SWITCHBOARS

CLIENT: M/s RFCL, Ramagundam	**PROJECT**: Implementation of ZLD Unit	**PLANT**: ZLD
ISSUED FOR : PROPOSAL ☐	ENQUIRY ☒	ORDER ☐ FINAL ☐

GENERAL		
Manufacturer's Type		
Ref. Standards		
Rated Operational Voltage with ± %		
Rated Insulation Voltage		
Rated Voltage of Aux. Circuits with ± %		
Rated Current		
Short Circuit Rating		
Degree of Protection of Enclosure		
Service Conditions : Indoor / Outdoor		
DRAWOUT FACILITIES	Circuit Breakers	
	P.Ts.	
	Motor Starters	
	Protective Relays	
	Meters	
SINGLE FRONT / DOUBLE FRONT	C.B. Feeders	
	Other Feeders	
Cable Entry :	Top / Bottom	
Accessibility :	Front / Back	
MAXIMUM NOS. OF FEEDERS IN ONE PANEL	Circuit Breakers	
	Motor Starters	
	Switch Fuse	
SHEET STEEL TYPE & THICKNESS	Load Bearing member	
	Non Load Bearing member	
	Base Channel	
Material of Gaskets		
Material of External Hardware		
Operating Height : Max. / Min.		
Space Heater Rating of each Panel		
PAINTING	Method of Pre-treatment	
	Type	
	Thickness of Paint	
	Finishing Shade	
Dimensions : L X B X H / Dim. Drg. Ref. No.		
Shipping Dimensions of Largest Package		
Weight :	Static / Dynamic	
BUS - BARS		
Material		
SIZE	HBB : Phase / Neutral	
	VBB : Phase / Neutral	
	Ground	
	Supporting Calculations Attached	
MINIMUM CLEARANCE	Between Phases	
	Between Phase & Earth	
Minimum Creepage Distance		
Current Rating : Continuous / Short Time		
Temp. Rise for : Cont. Load / Short Time Current		
SUPPORT	Material	
	BIL	
	Arrangement :Separate/Common	
Material of Bus-bar Insulation		
Shrouding Material for Joints		
No. & Type of Bolts		
CIRCUIT BREAKERS/VACUUM CONTACTOR		
Make		
Maker's Type		
Ref. Standards		
Type of Circuit Breaker		

All rights reserved

Short Circuit Category		
Maximum Operating Voltage		
No. of Poles		
CURRENT RATING	Continuous	
	1 second RMS	
	Momentary (kA Peak)	
BREAKING CURRENT	Symmetrical KA	
	Asymmetrical KA	
	Sym. MVA at Rated Voltage	
Making Current (Peak)		
INSULATION LEVEL	1 Min. PF withstand Voltage	
	Impulse withstand Voltage	
No. of Breaks per Pole		
TYPE AND MATERIAL OF	Main Contacts	
	Arcing Contacts	
Contact Pressure		
Type of Closing Mechanism		
Type of Tripping Mechanism		
Type of Arc Control Device		
Arc Pumping Features with Details		
Trip Free Features with Details		
Total Closing Time		
Interrupting Time at 10%, 50%, 100% of rated Interrupting Capacity	Total	
	Arcing Time	
SPRING CHARGING MOTOR	Rating	
	Voltage	
	Insulation	
	Duty	
Spring Charging Time		
CONTROL VOLTAGE WITH RANGE	Closing	
	Tripping	
	Alarm and Indication	
POWER/ CURRENT REQUIRED FOR	Closing	
	Tripping	
AUXILIARY CONTACTS	No. of Spare Contacts : NO / NC	
	Contact Rating : AC / DC	
	Convertible : Yes / No	
Net Weight of Breaker		
Type Testing Authority & Test Report Ref. No.		
CURRENT TRANSFORMERS		
Make / Maker's Type		
Ref. Standard		
Type of Primary Winding		
Ratio		
Rated Burden		
Accuracy Class		
ALF / ISF		
Insulation Class & Material		
Ref. Magnetisation Curve No.		
POTENTIAL TRANSFORMERS		
Make / Maker's Type		
Ref. Standard		
Winding Connection		
Ratio		
Rated Burden		
Accuracy Class		
Insulation Class & Material		
SWITCHES		
Make / Maker's Type		
Ref. Standard		
Type of Switch		
Rated Operational Voltage		
Utilisation Category		
Rated Operational Current		

All rights reserved

Short Time Withstand Current		
No. of Poles / Break		
Type Test Certificate Ref. No.		
FUSES		
Make / Maker's Type		
Ref. Standard		
Type of HRC Fuse		
Rated Voltage / Current		
Category of Duty		
Prospective Breaking Current		
CURRENT TIME CURVE SHOWING PRE-ARCING AND TOTAL I^2T VALUES	Ref. No.	
	Attached	
CONTACTORS		
Make / Maker's Type		
Ref. Standard		
Rated Operational Voltage		
Utilisation Category		
Rated Duty		
Rated Thermal Current		
OPERATING VOLTAGE OF COIL	Pick up Max./Min.	
	Drop off Max./Min.	
Coil Consumption Pick up / Hold on		
RELAYS		
Make / Maker's Type		
Ref. Standard		
Operating Principle		
Setting Range		
Type of Mounting		
Burden		
Reset : Hand or Self		
Flag Indication Type		
Ref. Characteristic Curve Type		
Ref. Descriptive catalogue		
INSTRUMENTS AND METERS		
Make / Maker's Type		
Ref. Standard		
Operating Principle		
Scale Range		
Accuracy		
Size		
Type of Mounting		
CONTROL SWITCHES		
Make / Maker's Type		
Ref. Standard		
Contact Rating		
Utilisation Category		
PUSH BUTTONS		
Make / Maker's Type		
Ref. Standard		
Contact Rating		
Utilisation Category		
SIGNAL LAMPS		
Make / Maker's Type		
Ref. Standard		
Rated Voltage / Watts		
Type of Lamp Holder		
Type of Globe		
MINIATURE CIRCUIT BREAKER		
Make / Maker's Type :		
Ref. Standards		
Rated Current		
Breaking Capacity		

All rights reserved

MOULDED CASE CIRCUIT BREAKERS	
Make / Maker's Type	
Ref. Standard	
Current Rating	
Breaking Capacity	
Setting Range of Thermal Release	
Setting Range of Magnetic Release	
CABLE GLANDS	
Material	
Type	
TERMINAL BLOCKS	
Make	
Type	
Current Rating	

Note: Technical Particulars shall be filled by the vendor and submitted for Approval **after order** in line with ITB / P.O. requirement before commencement of manufacturing.

All rights reserved

SPECIFICATION SHEET
INDUCTION MOTORS

CLIENT: M/s RFCL, Ramagundam **PROJECT**: Implementation of ZLD Unit **PLANT**: ZLD

ISSUED FOR : PROPOSAL ☐ ENQUIRY ☒ ORDER ☐ FINAL ☐

GENERAL

Item No. :	Ref. Stds. : IS / IEC
Quantity :	Encl. Docs. : TS-8102
Description : 3 Phase Induction Motor	Make : As per enclosed Vendor List
Code No. :	Maker's Type. :

TESTS: Routine ☒ Type ☒ Others ☒

SERVICE CONDITIONS

SYSTEM DETAILS	AMBIENT CONDITION		
Rated Voltage with ± % : 415V ± 10 %	Temp: - Max./Min./Design Ref.: 47.5 / 8.4 / 50°C		
No. of phases : : 3 phase	Relative Humidity : 100 %	Alt. above sea : <1000 M	
Rated Frequency With ± % :50 Hz ± 3 %	**Atmospheric Pollution**	Dusts : Urea	
Combined V & F variation : ± 10 %		Vapour : Ammonia	
Fault Level : As per system fault level	**Area ***	Safe ☐	Hazardous ☐
Space Heater Supply : 240 V AC	**Haz. Area classification *:** Zone: Temp. class : Encl. Gr.		
Low Voltage Heating Supply :	**Location** : Indoor ☐ Outdoor ☒		
INSTRUMENT CONTACT RATING A.C. :	**COOLING WATER**		
INSTRUMENT CONTACT RATING D.C. :	Inlet Press. : kg/sq.m .	Inlet Temp. °C	
Aux. Motor Supply :	Fouling Factor :	Outlet Temp. °C	

BASIC DATA

RATING & DUTY #	DRIVEN M/C DATA #
Rated Output :	Type :
Syn. Speed :	Make :
Duty :	Absorbed Power :
Rotor Type : Squirrel Cage	Coupling :
Starting Method : D.O.L.	Torque-Starting / Max. :
Max I Start/I Rated : Refer Technical Specification	GD^2 at Motor Speed :
Min. V Start at Terms : 80 %	Thrust - Radial / Axial :
Min. Starting Torque at V_R :	Addl. Data :

EXECUTION	ACCESSORIES			
Degree of Protection : IP 55	Foundation Bolt ☒		Space Heater ☒	
Addl. Degree of Protection : *	Lifting Eye Bolt ☒		Drain Plug ☒	
Mounting Arrangement :	Cable Glands ☒		Cable Lugs ☒	
Direction of Rotation :	Diff. C.T.s ☐		C.W. Flow Indicator ☐	
Insulation Class: Class F with temp. Rise limited to class B insulation	**RTDs for HT Motor**	Wdgs. ☒	Hot Air ☒	Bearings ☒
Cooling Method :	**Thermometer For HT Motor**		Hot Air ☐	Bearings ☒
Stator Connection : Delta	**Earthing Terminals**		On Body ☒	In T.B. ☒
CABLING DATA	Name Plate : ☒		Addl. name plate : ☒	
Power cable :	Rain Protecting Hood : ☒		Thermistor ☐	
Heater cable :	**SPARE PARTS**			
C.T. cable :	Required ☒		For Period of 2 Years operation and maintenance	
R.T.D. cable :	Bearings DE & NDE ☒		Cooling Fan ☒	
Alarm cable :	Space Heater for (30kW & above) : ☒			
CABLE GLAND Type :Double Compression	Grease Nipple & Plug : ☒			
CABLE GLAND Material : Stainless Steel	Terminal Box ☒		Cooling Fan Cover ☒	

PAINTING

Type : Epoxy Based

All rights reserved

Shade : 631 of IS : 5

Note :- All unfilled data shall be filled in by the bidder.

* Shall be filled in by the bidder & # to be provided by the vendor.

All rights reserved

TECHNICAL PARTICULARS
INDUCTION MOTOR

CLIENT: M/s RFCL, Ramagundam **PROJECT**: Implementation of ZLD Unit **PLANT**: ZLD

ISSUED FOR : PROPOSAL ☐ ENQUIRY ☒ ORDER ☐ FINAL ☐

GENERAL		
Item No.		
Quantity		
Description		
Code No.		
Ref. Standard		
Make		
Maker's Type		
ELECTRICAL DATA		
Rated Output		
Rated Voltage		
No. of Starts - Hot / Cold		
Torque - Starting / Pull Up / Pull Out		
Starting Time at min. V Start (Hot / Cold)		
Safe Stall Time at V_R / $1.1V_R$		
Stator Time Constant		
Temp. Rise at Full Load - Wdg. / Hot Air / Brg.		
TEMP. RISE OF STATOR / ROTOR AFTER	3 Starts From Cold	
	2 Starts From Hot	
Current at FL / 0.85 FL		
Efficiency at FL / 0.85 FL		
Speed at FL / 0.85 FL		
Power Factor at FL / 0.85 FL / Start		
Push Pull Voltage withstand Capacity		
Max. V dip for 1 sec. / 10 sec. / 60 sec.		
Losses - Fixed / Copper / Total		
Space Heater Rating		
Suitable for Low Voltage Heating		
C.T. Ratio & Accuracy Class		
C.T. V_K & Imag. at V_K / 2		
Heating Time Constant		
Cooling Time Constant		
MECHANICAL DATA		
Frame Size / Ref. Dimensional Drg.		
Weight - Stator / Rotor / Total		
Heaviest Weight to be Lifted		
Rotor GD^2 in Kgm^2		
REACTION AT SUPPORTS FOR	S/C Condition	
	Starting Condition	
	Running Condition	
	Push Pull Condition	
Max. Vibration Limit		
Max. Noise Level		
Suitable for Outdoor Use		Yes ☐ No ☐
Suitable for Bi-directional Rotation		Yes ☐ No ☐
Material of Insulation		
Treatment of Insulation		
Winding Coils Replaceable at Site		
Type & Material of Fan		
Material & Thickness of Cooler Tube		
Cooling Water Required in M^3 / hr		
Lubrication Type		
Lubricant Specn.		
Interval of Lubrication		
BEARING NOS. & TYPE	DE	
	NDE	
	GUIDE	
On Line Lubrication		
Type & Rating of Main Cable Box		
No. of Cable Glands in Control Cable Box		

Note: Technical Particulars shall be filled by the vendor and submitted for Approval **after order** in line with ITB / P.O. requirement before commencement of manufacturing.

 All rights reserved

SPECIFICATION SHEET
LOCAL CONTROL STATION

CLIENT: M/s RFCL, Ramagundam	**PROJECT**: Implementation of ZLD Unit	**PLANT**: ZLD	
ISSUED FOR : PROPOSAL ☐	ENQUIRY ☒	ORDER ☐	FINAL ☐
GENERAL		**AMBIENT CONDITION**	
Ref. Stds. :IS / IEC		Temp. Max./Min./Design Ref.: 47.5 / 8.4 / 50°C	
Encl. Docs. : TS-8200		Relative Humidity: 100%	Alt. above Sea: Less than 1000 m
Vendor :		**Atmospheric Pollution**	Dusts : Urea Dust
Vendor Ref. No. :			Vapours: Ammonia Vapour
		Area *	Safe : ☐ Hazardous : ☐
Sample : Reqd. : ☐	Not Reqd. : ☒	**Hazardous Area Classification ***	Zone : Encl. Gr. :
Tests : Routine : ☒	Type : ☐		Temp. Cl.
Others: ☐		**Location** : Indoor ☒ / Outdoor ☒	

BASIC DATA		
Item No.		LCS FOR LV MOTORS
Quantity		
Rated Control Voltage with + %		240V ± 10%
Rated Frequency with +		50Hz ± 3%
Enclosure for Hazardous Area		
Provisions required in LCS		
PUSH BUTTON	Start	Required
	Stop	Required
	Reverse	
	Forward	
CONTROL SWITCH	TNC	
	Lock / Service	
	OFF / AUTO / ON	
	Local/Remote	Required
INDICATION LAMP	ON	Required
	OFF	Required
	Ready for Service	Required
	Space Heater ON	Required
	C.B. tripped	
METERS	Ammeter	Required
	Range	
	C.T. Sec. Current	1 Amp.
RAIN HOOD	Reqd.	Required
	Not Reqd.	
Control Cable Size PVCAPVC (Cu)		
Painting Type & Shade		Epoxy Shade 631of IS 5
Period For which Spares Reqd.		
		2Years

MAKE OF COMPONENTS	
Push Buttons	L & T / Siemens / Alstom / Teknic / Vaishnav
TNC Switches	L & T / Siemens / Alstom / Teknic
Ammeter	AEP / IMP / Meco / Universal
Indication Lamp	L & T /Teknic / Vaishnav
Cable Gland	Baliga / Flexpro / CEAG FCGPL / FEPL
Terminal Box	Elemex / Siemens / L& T

Note :- All unfilled data shall be filled in by the bidder.

* Shall be filled in by the bidder

All rights reserved

CLIENT: M/s RFCL, Ramagundam **PROJECT**: Implementation of ZLD Unit **PLANT**: ZLD

ISSUED FOR : PROPOSAL ☐ ENQUIRY ☒ ORDER ☐ FINAL ☐

Details of Local Control Stations

Sl.No.	ITEM NO.	CODE NO.	DESCRIPTION	I_{FL}	C.T. Ratio	Remarks

All rights reserved

TECHNICAL PARTICULARS
LOCAL CONTROL STATIONS

CLIENT: M/s RFCL, Ramagundam	**PROJECT**: Implementation of ZLD Unit	**PLANT**: ZLD
ISSUED FOR : PROPOSAL ☐	ENQUIRY ☒	ORDER ☐ FINAL ☐

GENERAL		
Maker's Type		
CONSTRUCTIONAL FEATURES		
Material of Construction		
Thickness of Enclosure		
IP Class of Enclosure		
Mounting Arrangement		
Door hinged or not		
Gasketing Material		
External Hardwares		
Rainhood reqd. or not		
Mounting Component	On Door	
	On Base Plate	
Provision of Padlocking provided with		
Dimensions LxBxH / Dimensional Drg. Ref. No.		
Type Test Certificate No.		
WIRING		
Wiring Material & Size		
External Cable Size		
TERMINATION ARRANGEMENT		
Termination Arrangement		
Cable Glands	Material	
	Types	
Terminal	Make	
	Type	
	Rating	
PUSH BUTTONS		
Make & Maker's Type		
Ref. Standards		
Rated Voltage		
No. of Contacts N.O. / N.C.		
Contact Rating (V / A)		
AMMETER		
Make & Maker's Type		
Ref. Standards		
Rated Current / VA		
Accuracy Class		
Scale Band		
Size		
CONTROL SWITCHES		
Make & Maker's Type		
Ref. Standards		
Rated Voltage		
No. of Contacts N.O. / N.C.		
Contact Rating (V / A)		
Utilization Category		
SIGNAL LAMPS		
Make & Maker's Type		
Ref. Standards		
Rated Voltage / Watts		
Type of Holder		
Safety Resistor		

Note: Technical Particulars shall be filled by the vendor and submitted for Approval after order in line with ITB / P.O. requirement before commencement of manufacturing

 All rights reserved

SPECIFICATION SHEET
LIGHTING SUB DISTRIBUTION BOARD

CLIENT: M/s RFCL, Ramagundam **PROJECT**: Implementation of ZLD Unit **PLANT**: ZLD

ISSUED FOR : PROPOSAL ☐ ENQUIRY ☒ ORDER ☐ FINAL ☐

GENERAL	AMBIENT CONDITION	
Ref. Stds. : IS/IEC	Temp.- Max / Min / Design ref.: 47.5 / 8.4 / 50°C	
Encl. Docs. : TS-8083	**Relative Humidity:** ≤ 100%; Alt. above sea : <1000 M	
Vendor :	**Atmospheric**	Dusts : Urea
Vendor Ref. No. :	**Pollution**	Vapour : Ammonia
SYSTEM DETAILS	**Area ***	Safe ☐ Hazardous ☐
Nominal Voltage with ± % : 415V ± 10%,	**Hazardous**	Zone : Encl. Gr. :
Rated Frequency with ± % : 50 Hz ± 3%,	**Area Classification ***	Temp. Class :
Combined V & F Variation : ± 10%,	**Location** Indoor ☐	Outdoor ☒
No. of Phases & Wires : 3-Phase, 4-wire		

TESTS TO BE WITNESSED: Routine ☒ Type ☐ Others ☐

BASIC DATA				
Item No. :		**1**	**2**	**3**
Quantity :				
Description :		LSDB	LSDB	DC LSDB
Code No.				
Incoming & Outgoing feeders		Incoming - 1 No. & Outgoing – 18/12 Nos. (as reqd.)	1 No. & Outgoing – 9/6 Nos. (as reqd.)	Incoming - 1 No. & Outgoing - 9 Nos.
Degree of Protection :		Min IP55	Min IP55	Min IP55
Addl. Degree of Protection :		--	--	--
Cable Type	Incoming			
& Size	Outgoing	1.1 KV, 3x2.5 sq. mm (Cu) XLPE-A-FRLS PVC	1.1 KV, 3x2.5 sq. mm (Cu) XLPE-A-FRLS PVC	1.1 KV, 3x2.5 sq. mm (Cu) XLPE-A-FRLS PVC
Painting Type & Shade :		Epoxy based Shade 631 of IS	Epoxy based Shade 631 of IS	Epoxy based Shade 631 of
Period for which Spares required		2 years	2 years	2 years

MAKE OF COMPONENTS

SWITCH	: L&T / Siemens / Alstom Power / Kaycee
M.C.B.	: Legrand / Schneider / ABB / Siemens
CABLE GLANDS	: Dowell / Braco / Cambre / Thomas & Betts / Blackburn / Klauke / Panduit
TERMINAL BLOCKS	: Connectwell / Wago / Phoenix

All unfilled data shall be filled in by the bidder.

* Shall be filled in by the bidder

All rights reserved

TECHNICAL PARTICULARS
LIGHTING SUB DISTRIBUTION BOARD

CLIENT: M/s RFCL, Ramagundam **PROJECT**: Implementation of ZLD Unit **PLANT**: ZLD

ISSUED FOR : PROPOSAL ☐ ENQUIRY ☒ ORDER ☐ FINAL ☐

General	Item No. :		
	Make & Maker's Type		
	Material & Thickness of Enclosure		
	Gasketing Material		
	COVER TYPE	Internal :	
		External :	
	PAINTING	Pre treatment	
		Shade	
	Material of Ext. Hardware < 8mm / > 8mm		
	Dimensional Drawing Reference No. :		
	Weight :		
M.C.B.	Make & Maker's Type		
	Reference Standards		
	Category of Duty :		
	Rated Current :		
	No. of Poles :		
	Type of Neutral :		
Terminal Block	Make & Type		
	Rated Current		
Cable Gland	Type :		
	Material :		

Technical Particulars shall be filled by the bidder and submitted for Approval **after order** in line with ITB / P.O. requirement before commencement of manufacturing.

All rights reserved

SPECIFICATION SHEET
INTERLOCKING SWITCH SOCKET & PLUG

CLIENT: M/s RFCL, Ramagundam **PROJECT**: Implementation of ZLD Unit **PLANT**: ZLD

ISSUED FOR : PROPOSAL ☐ ENQUIRY ☒ ORDER ☐ FINAL ☐

GENERAL		AMBIENT CONDITION	
Ref. Stds. : IS / IEC		Temp.- Max / Min / Design ref.: 47.5 / 8.4 / 50°C	
Encl. Docs. : TS-8120		Max Relative Humidity ≤ 100% Alt. above sea : <1000 M	
Vendor :		Atmospheric	Dusts : Urea
Vendor Ref. No. :		Pollution	Vapour : Ammonia
Sample Reqd. :		Area *	Safe ☐ Hazardous ☐
		Hazardous Area Classification *	Zone : Encl. Gr. :
			Temp. Class : T3
		Location :	Indoor ☒ Outdoor ☒

TESTS TO BE WITNESSED : Routine ☒ Type ☐ Others ☐

BASIC DATA		
Item No.		
Quantity		
Rated Voltage & Frequency		240V ± 10%, 50 Hz ± 3%,
Rated Current		20 Amp
No. of Phases & Pins		1 Ph, 3 Pin
Degree of Protection		IP55
Addl. Degree of Protection		--
Cable Size	Supply	
	Plug	3 C X 2.5 mm^2 (Cu)
Period for which Spares required		2 Years

MAKE OF COMPONENTS	
MCB	Legrand / Schneider / ABB / Siemens
SOCKETS :	Legrand / Schneider / ABB / Siemens
PLUG :	Legrand / Schneider / ABB / Siemens
CABLE GLANDS :	Dowell / Braco / Cambre / Thomas & Betts / Blackburn / Klauke / Panduit
TERMINAL BLOCKS :	Connectwell / Wago / Phoenix

All unfilled data shall be filled in by the bidder.
* Shall be filled in by the bidder

All rights reserved

TECHNICAL PARTICULARS
INTERLOCKING SWITCH SOCKET & PLUG

CLIENT: M/s RFCL, Ramagundam **PROJECT**: Implementation of ZLD Unit **PLANT**: ZLD

ISSUED FOR : PROPOSAL ☐ ENQUIRY ☒ ORDER ☐ FINAL ☐

General	Make & Maker's Type		
	Material & Thickness of Enclosure		
	Gasketing Materials		
	Material of Ext. Hardwares < 8mm / > 8mm		
	Cable glands Type & Material		
	Painting	Pre treatment	
		Shade	
	Dimensional Drawing Reference No.		
	Weight of Switch Socket / Plug		
Switch	Make & Maker's Type		
	Reference Standards		
	Rated Current		
	Utilisation Category		
Fuse	Make & Maker's Type		
	Reference Standards		
	Rated Current		
Socket	Make & Maker's Type		
	Reference Standards		
	Rated Current		
Plug	Make & Maker's Type		
	Reference Standards		
	Rated Current		

Technical Particulars shall be filled by the bidder and submitted for Approval **after order** in line with ITB / P.O. requirement before commencement of manufacturing.

All rights reserved

SPECIFICATION SHEET
JUNCTION BOX

CLIENT: M/s RFCL, Ramagundam	**PROJECT**: Implementation of ZLD Unit	**PLANT**: ZLD	
ISSUED FOR : PROPOSAL ☐	ENQUIRY ☒	ORDER ☐	FINAL ☐
GENERAL			
Ref. Stds.	IS / IEC		
Encl. Docs. TS-8201 ☐			
Make			
Maker's type			
Sample Required	Yes ☐	No ☒	
AMBIENT CONDITIONS			
Temp. Max. / Min. / Design Ref.	47.5 / 8.4 / 50°C		
Rel. Humidity	100%		
Alt. Above Sea Level	<1000M		
ATMOSPHERIC POLLUTION Dusts	UREA		
ATMOSPHERIC POLLUTION Vapours	AMMONIA		
Area *	**Safe** ☐	**Hazardous** ☐	
Hazardous area classification *	Zone:	Encl. Gr.:	Temp. Class:
Location	Indoor ☒	Outdoor ☒	
TESTS	Routine ☒	Type ☐	Others ☐
BASIC DATA			
Item No.			
Quantity			
Rated Voltage	240V ± 10% AC		
Rated Frequency	50Hz ± 3%		
Rated Current	16A		
No. of Phases & Wires	1Phase / 3wires (PNE)		
Application	For looping of cables		
Material of Enclosure	As per specification		
Shape of Enclosure	Round		
Degree of Protection	IP-55		
Addl. Degree of Protection			
Type of Cover	Dome		
No. of Outlets	3 nos 3Cx2.5 sq. mm (Cu). + one stopping plug		
PAINTING	Type: Epoxy based		
	Shade: 631 as per IS: 5		
SPARE	Required: Yes		
	Duration: 2 Years		
No. of Terminals: As required			
Cable gland: As required			
Stopping Plug: 1 no.			
CABLE SIZE			

Note :- All unfilled data shall be filled in by the bidder.
* Shall be filled in by the bidder

All rights reserved

TECHNICAL PARTICULARS
JUNCTION BOX

CLIENT: M/s RFCL, Ramagundam	**PROJECT**: Implementation of ZLD Unit	**PLANT**: ZLD
ISSUED FOR : PROPOSAL ☐	ENQUIRY ☒	ORDER ☐ FINAL ☐

GENERAL	
Item No.	
Ref. Std.	
Type of Junction Box	
Make	
Maker's type	
CONSTRUCTIONAL FEATURES	
Material of Construction	
Thickness of Enclosure	
Enclosure Protection Class	
Mounting Arrangement	
Cover Fixing Arrangement	
Gasketing Material	
External Cable Sizes	
Dimensions LX B X H / Dimensional Drg. Ref. No.	
Weight	
Painting	
Type Test Certificate No.	
CABLE GLAND	
Type	
Material of Construction	
Make	
TERMINAL BLOCK	
Nos. of Terminals	
Material	
Type	
Current Rating	
Fixing Arrangement	
Make	

Note: Technical Particulars shall be filled by the bidder and submitted for Approval **after order** in line with ITB / P.O. requirement before commencement of manufacturing.

All rights reserved

TECHNICAL SPECIFICATION

ELECTRICAL ERECTION, TESTING & COMMISSIONING

All rights reserved

CONTENTS

LIST OF ATTACHMENTS

ATTACHMENT NUMBER	DESCRIPTION	NO. OF SHEETS
PDS: E 603	Arrangement of Connections of Earth electrode	6
PDS: E 604	Typical Details of Connections in Earth Pit	1
PDS: E 605	Earth Pit Details	2
PDS: E 606	Typical Details of Earthing of motor & Start Stop Push Button Station	2
PDS: E 610	3.8m long G.I. Earth Electrode for Earthing	1
PDS: E 611	G.I./Al accessories for Earthing	2
PDS: E 612	Typical Earthing Arrangement across Pipe Joints/Valves	1
PDS: E 613	Earthing of Storage Tank & Vessel	1
PDS: E 614	Fixing Arrangement of Air termination & Roof/Down Conductors for Lightning Protection	6
PDS: E 615	G.I. Earth Bus	1
PDS: E 212	Typical Installation of Lighting Fixtures at Ground Level	2
PDS: E 208	Installation Arrangement for Area Lighting Fixtures	1
PDS: E 210	Junction box for Street Lighting Pole	1
PDS: E 516	Typical Arrangement of Cables buried in slits	1
PDS: E 530 to E 538	Pre-fabricated Ladder Type Cable Racks	9

 All rights reserved

1.0 SCOPE

1.1 This standard covers the technical requirements of erection, testing and commissioning of all Electrical equipments at site.

1.2 This standard shall be read in conjunction with the relevant technical specifications and other references specified therein.

1.3 Scope of Work

1.3.1 The scope of work shall generally include supply (wherever specified), handling, transportation, unpacking, checking, reporting of damages/defects, storage, assembling, erection, installation, including fabrication, alignment, levelling, grouting, welding, bolting, painting, etc., testing and commissioning of various electrical equipments and machineries, illumination system, earthing system, lightning protection and fabrication & installation of steel structural etc. required for the complete electrical system as per drawings & documents, specifications, standards & codes, prevalent rules & regulations and best engineering practices.

1.3.2 Detailed Scope of Work (Supply and Erection) shall be as indicated in project specific Technical Specifications.

1.3.3 The entire electrical installation work shall be carried out in accordance with the following:

a) Indian Electricity Rules & all applicable Statutory Acts & Regulations
b) This specification
c) The latest issue of approved drawings of vendors/consultant
d) The recommendation of the manufacturers
e) Latest issue of Relevant IS
f) The direction of the site engineers

Any additional revision made to the drawings at a later stage, which in the opinion of the consultant/owner is necessary, will be binding on the contractor and shall have to be carried out.

1.3.4 The contractor shall be responsible for:

a) Obtaining approval from the Electrical Inspector/Factory inspector or any other Statutory Authority for equipment, plant design/drawings and complete installation work.
b) Carrying out modifications in the equipment & installation as required to comply with the above.
c) Submitting installation certificates on completion of installation to Electrical Inspector & obtaining certificates of approval of the installation.

These jobs shall be carried at the contractor's own cost and the work shall be deemed to have not completed unless the approved certificates mentioned under (c) are submitted to the owner.

1.3.5 No erection material shall be supplied by the owner. All materials like clamps and tags for cable/conduit and earthing including hardware material, all tools and tackles required for erection, testing and commissioning such as, but not limited

 All rights reserved

to jacks, welding sets, oxygen/acetylene gas, cutting set, drilling machines, grinders, pipe bending machine, dies for pipe threading, scaffolding materials, cables, switches for erection power supply and workshops, temporary lightning protection, cable jointing tools, megger, earth tester, primary and secondary injection test sets, substandard meters for calibration of ammeters & voltmeters etc. and any other tools required shall have to be arranged by the contractor.

1.3.6 Consumable materials required for the erection jobs such as, but not limited to kerosene, cotton waste, jute, duster shims for alignment & levelling, cement, concrete, bricks, welding electrodes, paints, carbon tetrachloride, unleaded petrol, solder, flux, raul-plug, phill-plug, nylon-plug, anti corrosive grease for copper, aluminium contacts etc. shall also have to be arranged by the contactor.

1.3.7 Cleaning of site after completion of erection as well as regular clearance of unwanted material from site, returning of all packing materials, & excess of other material supplied by owner back to owner's stores shall also be covered under the scope of work.

1.3.8 All equipments and instruments shall be inscribed with proper number, nomenclature, cautionary signals & other instructions as may be necessary.

1.3.9 The contractor shall supply and touch-up any surface of switchgear and other electrical equipments which are scratched and/or damaged during transportation and erection. The paint used shall match exactly the surface being touched up.

1.3.10 Major civil engineering works pertaining to electrical equipment like foundation and plate inserts etc., if excluded from the scope of work, the contractor shall check their correctness as per latest manufacturer's drawing and carry out minor civil jobs such as, but not to limited to, grouting of base plates, channels, supports and foundation bolts, cutting holes in wall and ceiling, chipping of floor and ceiling, sealing of cable entries and making good the same after installation of the equipment, levelling and any other minor similar civil works advised by site engineer has to be carried out by the contractor with out any extra charges.

1.3.11 The contractor shall furnish all supervision, labour, tools, rigging material and incidental material such as bolts, welding electrodes, anchors etc. required to install, test and adjust the equipment.

1.3.12 The contractor shall employ all skilled, semi-skilled and non-skilled labourers for erection, installation & testing as required. All Electricians, cable jointers, wiremen, welder and other employed shall be suitably qualified possessing valid certificates/licenses recognized by the complement authorities. The owner at its own discretion, put any electrician, wireman, cable jointer to test about competency of technician concerned and the contractor shall have to replace any such staff found incompetent in the opinion of the owner, to execute the job as per the requirement.

1.3.13 The contractor shall also furnish a list of Engineers/Supervisors and staff employed by him for erection and installation jobs giving in brief qualification and experience of such staff and indicating whether they hold such competency certificates/licences to supervise the electrical installation jobs as required under Indian Electricity Rules & State Electrical Inspectorate Rules.

 All rights reserved

1.3.14 The contractor shall set up his own work-shop and other facilities at site allocated place to undertake fabrication jobs, pipe bending, threading etc.

1.3.15 The contractor shall be responsible for recording of all readings and observations during erection, testing and commissioning in registers or on prescribed Performa. These shall be carried out in the presence of owner's representative. All such test data and records shall be duly singed by the contractor's Engineer/Owner's representative and shall be submitted to owner in triplicate.

1.3.16 The contractor shall hand over completed job. Minor details not specifically mentioned in the scope or schedule of quantities but required for completeness of the job shall have to be carried out by the contractor with out any extra cost.

1.3.17 The contractor shall commission all Electrical equipments and carry out all tests inclusive of load test as per the performance guarantee and will be responsible for final adjustment of relays, instruments, meters, breakers etc.

1.3.18 The specifications given under Cl. Nos. 5 & 7 are only guidelines and doesn't give the details entirely. It shall be the responsibility of the contractor to execute the work without any extra cost to owner, in accordance with the standard code of practices, the relevant manufacturer's drawings, owner's drawings, consultant's drawings and as per Site engineer's directions. Further, the stipulations of general conditions of the contract shall prevail over all other conditions stipulated in this specification.

1.4 **Exclusion of Work**

1.4.1 All major civil engineering works pertaining to electrical equipment like foundation and cable trenches shall generally be excluded. However, minor civil works shall be in contractor's scope. Transportation, handling, assembling, setting, aligning, levelling, plumbing and grouting of all electrical motors and generators shall generally be excluded.

1.4.2 Detailed Exclusion of Work shall be as indicated in project specific Technical Specifications.

2.0 CODES AND STANDARDS

2.1 The erection, testing & commissioning of the equipment shall comply with the latest issues of all relevant Indian Standards and Codes of practices. Design, manufacture, testing & installation of supply items shall also comply with the relevant standards. Equipments complying with equivalent IEC standards shall also be acceptable.

2.2 Some of the relevant Indian Standards are as follows:

IS: 10118 (Part-3)	Code of practice for selection, installation and maintenance of Switchgear and controlgear
IS: 11039	Requirements for mounting on rails in switchgear and controlgear installations.
IS: 1255	Code of practice for installation and maintenance of power cables upto and including 33 KV rating

 All rights reserved

IS: 2551	Danger notice plates
IS: 3043	Code of practice for Earthing
IS: 5216	Recommendations on safety procedures and practices in electrical work
IS: 8437	Guide on effects of current passing through human body
IS: 900	Code of practice for installation and maintenance of induction motors
IS: 15429	Storage, installation and maintenance of DC motors – Code of practice
IS: 13408	Code of practice for the selection, installation & maintenance of electrical apparatus for use in potentially explosive atmospheres (other than mining application or explosive process manufacture)

2.3 The contractor shall observe safety rules and take all necessary safety precautions to carry out the work in the plant.

3.0 EQUIPMENT SPECIFICATION

3.1 All equipments shall conform to the relevant specifications indicated in project specific Technical Specifications. They shall be suitable for specified site & climatic conditions.

3.2 Make of equipments shall be as per project specific requirements. Make of equipment not specified shall be as indicated and shall be subject to Owner/Consultant's approval.

3.3 Drawings and documents for various equipments shall be submitted as per Documentation Schedule indicated in relevant specifications.

3.4 Spares as specified/recommended spares for 2 years operation and commissioning shall be supplied for all equipments.

4.0 GENERAL PROCEDURE FOR ERECTION

The general procedure governing "Transfer of equipment and materials to Contractor", erection and Final acceptance of Owner/Consultant are given below:

4.1 Drawal of Equipment from Owner's stores

All equipment and materials, excepting, equipment/erection materials included in Contractor's scope of supply, shall be issued from Owner's store. Contractor shall arrange to draw the necessary equipment/material in the sequence required for erection and transports the same to contractor's store or directly to erection point.

4.2 Contractor's inspection at Owner's stores/Site

On receipt of any material (supplied by the owner) at site, before removing any issued item, contractor shall fully unpack and inspect all equipment received for completeness, signs of damages, defect etc. in the presence of owner's

 All rights reserved

representative and shall get all discrepancies (damage/short supply) duly recorded by owner's/consultant's authorised representative on the issue note, failing which, no claim by the contractor shall be entertained at a later date and he shall be required to make good/replace/repair the defective/damaged items at no extra cost.

4.3 **Handling and cleaning**

4.3.1 Contractor shall be responsible for proper handling and cleaning of all materials/equipment drawn/supplied by him until Owner/Consultant finally accepts the erected equipment.

4.3.2 Equipment shall be handled with care by experienced riggers under guidance of competent supervisors and as per rigging marks given on cases. Dragging on floor shall be avoided and crane/suitable rollers shall be used for moving the equipment at any times.

4.3.3 The contractor shall be fully responsible for the safe keeping of equipment issued to him till these are erected, tested, commissioned by him and accepted by owner/consultant.

4.4 **Transportation**

This involves transportation of various electrical equipments/materials from owner's stores/store siding to erection site/Contractor's stores & Contractor's Stores to erection site. When transporting the equipment, it shall be loaded on suitable trailer/trucks as per capacity and size of equipment, and shall be properly supported on the trailers/trucks by means of ropes/stoppers to avoid damage or tilting due to heavy jerks and vibration. Precautions, if any, displayed on equipment shall be strictly observed.

4.5 **Storage**

Whenever materials are required to be stored by the Contractor in his own stores at site, the contractor shall strictly observe the following requirements:-

4.5.1 The contractor shall keep a proper record of the materials handed over to him by owner/consultant at the initial start of the work and the materials drawn by him and kept in his stores.

4.5.2 All equipment and materials shall be properly stored by the contractor at site in the designated storage area provided by the owner.

4.5.3 The contractor shall ensure that all the materials drawn/supplied by him are stored indoor/under shade. However, if a package is temporarily stocked outdoor due to unavoidable reasons, this shall be ensured that the storage area is dry, hard and well-drained area.

4.5.4 Goods must not be placed directly on the floor/ground but shall be kept on blocks, 60 mm to 120 mm above the floor level such that the bottom is well ventilated.

 All rights reserved

4.5.5 In case of outdoor storage, the contractor at his own cost shall provide waterproof PVC sheets/tarpaulin to cover all goods so as to protect them from rain etc. These sheets/tarpaulin shall be removed for inspection once in a week and if found moist or mouldy, shall be dried in direct sunlight.

4.5.6 In addition to the above, the equipment manufacturer's storage instructions, if any, shall be strictly followed.

4.6 **Erection Requirements**

4.6.1 All work shall be carried out as per drawings supplied. Placing of equipment on foundation, aligning, grouting, connecting, fixing danger notice plate/board on equipment shall be done as specified. Meggering, labelling and painting shall form part of erection requirements.

4.6.2 Fixing of supporting frames/pedestals, grouting, cutting and dressing holes in walls/ceiling and any other minor civil work necessary for installation and levelling of electrical equipment are included in electrical erection scope.

4.6.3 The scope of erection also includes cable dressing/clamping/minor rerouting, minor relocation of fittings, internal cleaning of equipment, overhauling and minor repairs.

4.6.4 Fabrication of clamps from the materials specified and clamping of cables on racks, trays etc. fixing of single core cables in tri-foil formation in aluminium clamps, earthing of cable armour and lead sheath, wherever necessary (and as per the details given by Consultant) fall under erection scope of work.

4.6.5 Marking of cables by fixing/grouting the cable marks/number tags for every 25 meters along entire route of cables is included in the scope of work. The tags shall be made of Aluminium Strips.

4.6.6 The contractor shall without any extra cost, touch up with paint all electrical equipment which are damaged/scratched during handling, erection or repair. The paint used shall match exactly the painted surface of the equipment on which touch-up is done, and shall be epoxy based.

4.6.7 The descriptions given above are only to give a preliminary idea about the scope of work and they do not limit the entire scope to these descriptions only. Hence all other parts of the tender document shall be read in conjunction with the referred standards, associated drawings, specification sheets and schedule of materials & services to assess actual scope of work.

4.6.8 The contractor shall undertake erection of all equipment specified herein in accordance with good engineering practices in conformity with statutory regulations and Code of Practice and to the entire satisfaction of the purchaser/owner.

4.6.9 The contractor shall arrange all the necessary erection tools, tackles, testing and measuring instruments and shall supply all erection materials as required.

 All rights reserved

4.7 **Services of Suppliers' Erectors**

For guiding/supervising erection of sophisticated equipment, services of main equipment supplier's engineers/erectors may be made available free of cost to Contractor as per discretion of Owner/Consultant. However, this will not absolve the contractor from his responsibility nor his obligation to provide his own supervisors or technical personnel.

The contractor shall comply with all the directions, drawings etc. issued to him within the scope of his contract by Supplier's Engineer/Erector.

4.8 **Installation Certificate**

On completion of work the contractor shall submit installation certificates in prescribed Performa as required under prevailing Electricity Act/Rules to Electrical Inspector or other competent statutory body and obtain certificates of acceptance/approval of Electrical Installation carried out by him.

5.0 SPECIFICATION FOR ELECTRICAL ERECTION

5.1 **General**

5.1.1 These specifications lay down the erection procedures to be followed for each type of equipment, over and above the general "Erection Requirements".

5.1.2 The contractor shall also follow manufacturer's instructions and any other instructions of consultant/owner/Statutory bodies during erection.

5.1.3 Suggestive Erection Drawings shall be supplied to the successful bidder for Lighting, Earthing, Cable Tray Routing, etc. These drawings may be suitably modified, if required, to suit site requirement with the approval of owner/consultant.

5.1.4 As-Built Drawings shall be prepared by the Erection Contractor and supplied to owner/consultant.

5.2 **Switch Boards**

5.2.1 Handling

a) As far as possible lifting of switchboards is to be done by making use of eyebolts provided. Ensure that before lifting, all eyebolts are fully tightened and that panel supports, nuts and bolts are in tact and tight.

b) If lifting arrangement is not provided/not feasible and final positioning by sliding is unavoidable, retain packing base as long as possible and rolled on suitable pipes. Avoid sliding/dragging panel directly on floor by crowbars.

c) Maximum care shall be taken to avoid any damage to insulator, bushings, meters and protective equipment.

FORM NO: 02-0000-0021 F2 REV4 All rights reserved

5.2.2 Erection

a) Check the foundation according to the drawings. Ensure that all pockets have been rightly made. Fix the datum level, and level the foundation by chipping in such a way that the prescribed point of cubicle base plate is flush with finished floor.

b) Check the individual cubicle for any deformity and ensure that all faces are straight. Any dent on sheet steel frame is rectified before placing on foundation.

c) Wherever separate base frames are supplied level and the foundation in both directions (lateral and transverse) and ensure that these have been correctly levelled throughout. In case of runner rails, check the rails for level in both the directions and ensure that they are parallel to each other.

Wherever base frame is fixed to cubicle, place the cubicle on foundation ensuring that holding down bolts are directly over the foundation pockets.

d) Obtain correct level of panel with respect to floor/existing bus-bar by putting shims below base frame (as per drawing). Shims are to be supplied by the contractor. Measure the level of each frame with reference to datum and ensure that level difference between the two ends of the switchboard base frame is within ± 2 mm.

Owner shall provide a level benchmark in each sub-station. All levels shall be checked with this mark by Theodolite and the Contractor shall keep a record.

e) Cubicle shall be so adjusted that front face of all the panels are in one plane, all sides are plumb and corresponding horizontals on all panel faces (e.g. minimum lines, door edges, inter cubicle joints) line up in the same horizontal line(s). Match the cubicles and adjust properly. Provide gasket between edges, if required, so that no inter-panel gaps are seen.

f) Bolt adjacent cubicles and base frame together. (Drill new holes where corresponding holes of cubicles do not match after levelling, if found necessary).

g) Grout the foundation bolts with mortar. Also run grouting mixture under base of the cubicle frame and ram to ensure solidity. After grout has set properly, tighten the foundation bolts.

h) Fix bushing/insulators of bus-bars as per drawing if these have been despatched loose.

In case of extension panels for existing boards, this must be done before step (d).

5.2.3 Bus Connections and Installation of Loose items

a) Fix bus bar links and inter panel bus-bar connections with coupling bolts/supporting insulators. Clean the contact surface of bus bars and links and smear with contact grease before bolting.

b) Wherever recommended, fix shroud on the joints and fill compound, or compound may be put on joint to form smooth homogenous & spherical shaped mass and then wrapped with tape. Simple taping of joints may also

 All rights reserved

be done. Recommendation of manufacturer/consultant/owner shall be followed in this respect.

c) In case of misalignment of bus bars, adjustments may be necessary. The connecting pieces may have to be re-drilled or re-fabricated.

d) Check tightness of bus bars bolts connections with torque wrench. Follow vendor's recommendations in this regard.

e) Install all loose relays, instruments, cable boxes, metering and protective CTs, PTs etc. Before fixing the relays, make sure that they are cleaned and all packing materials have been removed from them and proper operation. Clean the contacts.

f) Connect all inter-panel bus wiring. Connections of relays and instruments shall be done as per drawings. Check the wiring according to wiring diagram.

g) Connect all earthing bus bar between the cubicles and it shall be connected at two points by Al/GI strip or cable to the main earthing ring. Fix all glands for incoming and outgoing and control cable connections on the holes provided for the purpose, as per drawings.

h) Drill holes for fixing cable glands/cable boxes as per drawings, if such holes are not provided. All spare holes, gaps etc. shall be blanked as per instructions of Owner/Consultant.

5.2.4 Cleaning

After erection is complete all cubicles, switches, starters, CTs, PT Chambers, Bus Bar Chambers etc. shall be cleaned by blowing air (preferably hot air). Surface of the insulation shall be cleaned with cloth soaked in CTC/Benzene.

5.2.5 Circuit Breaker installation

5.2.5.1 Air Circuit Breaker

a) Clean the contacts properly with both soaked in CTC/Benzene etc. Clean and lubricate the operating mechanism, check and rectify the main insulating contacts and bushings and also secondary contact for any damage/misalignment. Check the locking mechanism.

b) Manually close and trip the breaker several times and check contact alignment and pressure. Adjustment, if required, shall be done according to the manufacturer's instruction. The arc chute if despatched separately shall be fixed properly, only after checking of contact alignment etc. After fixing the Arc Chute, operate manually the breaker and check the contacts make properly. Measure contact resistance with ductor. Check the operation of OFF-ON indicator.

5.2.6 General Checks

a) Ensure that all gaskets are in position, replace the same if found damaged.

 All rights reserved

b) All opening covers and rear doors shall be bolted with required number of bolts. Take care that no bolt/nut/washer gets lost during handling and erection.

c) Check inter-changeability of breakers of same rating.

5.3 Motor Control Centre/Power & Motor Control Centre (MCC/PMCC)

Erection of MCC/PMCC, if required, is to be carried in accordance with Cl. No. 5.4 above. In addition, the following points are to be observed:

a) Cable glands shall be fixed in cable gland plates/cable alloys (Drilling of holes in gland plates are to be done at site as required).

b) Cable entries are to be made vermin proof.

5.4 Panelled Equipment

These include AC/DC Distribution Boards, Thyristor Control Panels, Inverters etc. In addition to the procedure laid down in Clause Nos. 4.0 & 5.3, any other instruction given by the manufacturer shall also be followed.

5.6 Cable Installation

5.6.1 General

a) Fabrication of chequered plates for trench covers, cutting of all types of Al/GI Cable trays to desired length, laying, spacing, fixing etc. of all types of cables, trays, supports, hangars etc. shall be according to the drawings or according to the instructions given by consultant/owner.

b) Contractor shall keep accurate record of cable drums issued to him, the drum nos. and actual length of cable taken out of each drum. Each cable length shall be cut from a specific drum as per approved schedule of cable. Length of cable runs shown in the cable schedules is the calculated length only and the actual lengths shall be measured at site before laying and cutting the cable. The contractor shall take extreme care to adjust cable runs from drums so that joints in the cable are avoided and wastage reduced to minimum.

c) For purpose of measurement of cable run for payment the length of cable between and terminations only will be considered.

5.6.2 Laying

a) The cable drums shall be properly mounted on jack/on a cable wheel. Make sure that the spindle is suitable for carrying weight of the drum without bending. Check that spindle is laying horizontal on the bearing so as to prevent the drum creeping to one side or to the other while rotating.

b) Unroll the cables from the drum in correct direction. Rotate drum only as per arrow mark given in the cable drum. Ensure that the end protection box attached to the flange of the drum is removed and securing rope cut to allow cable and move freely. Rotate the cable drum and simultaneously pull cable steadily and with even pulls and not with unnecessary jerk or strain. In no

 All rights reserved

case the cable shall be allowed to twist or kink since this is likely to spring the armour and fracture the insulation and outer serving of the cable.

c) Do not drag the cable on floor or hard surface. Use only wooden/steel cable rollers for this purpose.

d) Cable shall not be bent sharply to a small radius. The cable bending radius shall be as large as possible and will not be less than 12 times the outside diameter for paper insulated cables, 8 times for PVC cables and 15 times for XLPE cables. At joint termination, the individual core of cable shall not be bent with bending radius of less than 15 times the diameter over the insulation.

e) Where cables are laid on the MS racks, trays etc. ensure that trays/racks/supports are fixed properly in an approved manner or according to the drawings. Check from drawings that for horizontal runs of cable, bracket, risers, supports and angles are grouted or fixed in formation as required.

f) In sub-station where large no. of cables rise to panels/switchboards, it shall be ensured that these risers and rising cables do not interfere with cables on racks and rising cables do not cross the other cables in horizontal runs. Risers are to be properly supported so that weight of cable does not fall on terminations. All cable crossings shall be avoided. Cable cross section/power layout drawings shall be followed.

g) Cable laid in trenches shall be sealed at the entry to hazardous area/non-hazardous area as per details given by Consultant/Owner/Engineer-in-charge.

h) Openings in substation/MCC rooms and floors for entry of cables shall be sealed after the cables are laid.

i) Cables shall be clamped as shown in the drawings Care to be taken to space clamps to such intervals as to prevent buckling of cables.

j) Cables are laid in concrete trenches built by Consultant/Owner having covers of concrete of slabs or chequered plates. The laying of the cable on the racks shall be done in an approved manner and according to the drawings supplied.

k) Where cables are laid in open concrete trenches/slits, the trench/slits after laying cables shall be filled with sand & lean cement mixture and plastered so that surface flushes with top of trench/slit.

l) Care shall be taken that cables are not laid in waterlogged area as far as practicable. When laid above ground, cables shall be properly supported on rigid poles at least 2M high. At road crossing, minimum head clearance of 6M shall be provided.

5.6.3 Laying of Cables in underground pipes

a) Laying of cables in underground pipes shall include excavation of earth along the cable route, laying of pipes, back-filling, ramming and removing extra earth including supply of bricks and sand.

b) Ground trenches which shall be dug for laying of pipes such as to ensure that depth of the top of the pipe below the ground level shall be 600 mm

 All rights reserved

min. Bottom of the trench shall be properly levelled up and all odd and sharp materials removed. HDPVC/GI pipe shall be laid in the trenches. Proper bends & pull boxes wherever required shall be provided.

c) After laying of pipes, fill up earth in trench and ram properly. Remove all extra earth from the sides.

d) Lay the cables as per drawings and instructions of site engineer.

e) Fix cable markers at 100 M apart and at joints on the entire route length of the cables. The cable markers shall be made of pre-cast concrete block of 300 x 350 x 350 mm size with letter HT Cable, LT Cable, depth of the cable, arrow marks etc. inscribed. These shall have to be supplied by contractor at no extra cost and fixed as per the directions of the Consultant/Owner. The top of the above concrete slab shall have a smooth finish with cement only.

f) Laying of cables under road crossing shall be avoided to the extent possible. If required, it shall be done in pipes. When a larger number of pipes are laid across the road, manholes shall be built on either side to terminate the surface of road. Backfilled soil shall be rammed thoroughly to prevent road surface cracking due to settlement of loose soil.

g) Railway Crossing

Where the cable is laid under railway track, it shall be laid through cast iron pipe or spun concrete pipe of suitable diameter and strength. The pipe shall be laid not less than 1 M below the surface of the formation level. Pipes shall be laid with the gradient to facilitate drainage of water. Pipes shall be laid up to a minimum distance of 3 M from the centre of the end tracks on either side. The work shall have to be carried out in accordance with the rules and regulations of railways for cable crossings.

Where number of pipes is to be laid along road/rail crossing, these shall be laid in horizontal formation.

Masonry pipes to be constructed at both ends of road/railway crossing pipe and specified notice to be erected at crossing as per railway rules.

5.6.4 Directly buried Cables

a) Laying of underground cables shall include excavation of earth along the cable route, laying of cables, back-filling, ramming and removing extra earth including supply of bricks and sand.

b) Where cables are laid directly into ground trenches which shall be dug up for laying cables such as to ensure that depth of the top of the entire cable below the ground level shall be 750 mm min. for medium and low voltage, 900 mm min. for cables from 3.3 KV to 11 KV grade, 1050 mm min. for cables from 22 KV to 33 KV grade and 1000 mm min. for cables at road crossing and at railway level crossing respectively.

c) Bottom of the trench shall be properly levelled up and all odd and sharp materials removed. Trench bottom shall then be bedded with a 75 mm thick layer of sand. Before laying the cable over this bed, approval of consultant/owner for preparation of bed shall be taken. Cable shall be laid in the trenches in straight run, care shall be taken that any kinks or bend are not formed. After laying the cables, bricks shall be placed lengthwise on both the sides of the cable along the entire length to form through.

 All rights reserved

d) Fill up space between bricks with sand to height of the bricks.

e) Place bricks closely width wise on the top of the sand filled through. Fill up earth in trench and ram properly. Remove all extra earth from side. Do not use broken bricks. Only Class-I (of relevant IS) bricks shall be used.

f) If new cables are to be laid crossing existing cables, the new cables will be laid under existing cable at depth of not less than 200 mm from the existing cable. Ensure that the approach of the new cable to the crossing is uniform and gradually sloped.

g) Lay the cables as per drawings and instructions of site engineer.

h) Fix cable markers at 100 M apart and at joints on the entire route length of the cables. The cable markers shall be made of pre-cast concrete block of 300 x 350 x 350 mm size with letter HT Cable, LT Cable, depth of the cable, arrow marks etc. inscribed. These shall have to be supplied by contractor at no extra cost and fixed as per the directions of the consultant/owner. The top of the above concrete slab shall have a smooth finish with cement only.

5.6.5 Laying in Trenches

a) RCC slabs and chequered plates lifted from trenches for laying cables shall be put back in position at close of work every day to avoid accident & damage to cables in the trench.

b) When cables pass through pipes, ends shall be sealed by pouring bitumen compound or any other approved compound as required.

c) Pipes shall be provided for protection of the cables entering from the floor, trench etc. in the switchgears, MCCs, and pipes shall be sealed against water ingress.

5.6.6 Laying of single core HT un-armoured cables shall be done in manner stated hereunder. Cables shall be arranged in trefoil formation and clamped with suitable clamps. The clamps shall be fixed on cable hanger, racks etc. The cables shall be laid with extreme care without causing any damage to the sheathing cables in trefoil formation shall be bounded at a regular interval and earthed. Where necessary the bounding on trefoil groups shall be interconnected. The cables shall in no case be drawn through metallic pipe, ducts etc.

5.7 Cable Joining & Termination

5.7.1 General

The scope of work includes:

a) Soldering/crimping of sockets/ferrules and connections at all joints/terminations as per specifications. Sockets shall be provided at all terminations except where pressure clamp type terminals are provided.

b) Glanding of cable and fixing of cable boxes.

5.7.2 Specifications

a) All PVC cables shall be terminated in conventional type cable boxes, fitted with wiping gland/compression type gland/clamps with rubber bush. For

 All rights reserved

outdoor terminations double compression type gland and for indoor terminations single compression cable gland shall be used. Boxes may be filled with bituminous compound, epoxy M-seal, as and where specified.

b) For XLPE cables, special termination kits (heat shrink type) shall be used.

c) All paper-insulated cables shall be terminated in compound filled type cable boxes using conventional compound filling methods or in special cases resin oil filled or epoxy M-seal cable boxes. Wiping gland/clamp with rubber bush are fitted to the cable box.

d) All LT and control cables shall be terminated through compression type gland.

e) In explosion proof equipment sealing accessories, where provided in cable box, are to be used for sealing the cable entry to the box and termination.

f) All lighting and control cables shall be provided with crimped Al/Cu Sockets before termination in junction boxes.

g) In case of LT cables, armours shall be suitably earthed in compression type glands. For HT cables, this shall be done either in glands or by any other suitable means like bonding the armour with suitable wire and connecting same to the earth terminals inside cable box.

5.7.3 Crimping

All cable lugs for Cu conductor's sizes up to 400 sq. mm shall be of crimped type solder less Cu lugs, which shall be crimped by special hand/hydraulic crimping tools. Cable lugs for conductor sizes exceeding above shall be conventional soldering type, heavy duty. All the control cables, which shall be of copper conductor, shall be terminated without any additional lugs in screwed type terminals provided in various equipments. Before crimping the socket inhibiting grease shall be smeared over the conductor. Conductor shall be shaped properly before sliding the socket over it. Crimping shall be done in an approved manner.

5.7.4 Jointing

a) The jointing shall be done in an approved manner with proper jointing kits. Care shall be taken not to damage the insulation when opening the cable for jointing. Taped/temporary joints shall be avoided.

b) In case of LT PVCA cables, armours shall be suitably earthed in compression type glands. For HT cables, this may be done either in glands or by any other suitable means, like bounding the armour with suitable wire and connecting same to the earth terminals inside cable box.

c) Before commencing soldering of the socket, conductor shall be thoroughly cleaned and insulation protected. The ferrules shall be thoroughly cleaned. Ferrule and each strand of the cable shall be thoroughly sweated with solder to completely tin them and fill the conductor gaps and to remove all air pockets. Soldering materials of approved quality as per IES practice shall be used. Taping of the conductors shall be done in an approved manner after crimping/soldering.

d) Filling up compounds and sealing the cable box, shall never be done in one operation. After the first pouring of compound, it shall be topped up again with compound and then sealed.

 All rights reserved

e) Straight through Joints

Jointing of XLPE & PVC/HRPVC cables shall be done with extreme care and manufacturer's instructions shall be strictly followed. Soldering of ferrules shall be done with extreme care as stated earlier.

Earth continuity wire shall be plumbed and or clamped. Compound shall be filled according to the instruction of manufacturer of terminating kit/cable. Joints made inside trench or racks shall be properly supported. Wherever, joints are made inside the ground, brick masonry work shall be done around the joint box and filled with sand and thereafter covered with earth at no extra cost.

f) A tent shall be used in all circumstances where jointing work is being done outdoor for protection against rain and to prevent dust from being blown into exposed joint and jointing materials. Extreme care shall be taken to maintain proper phase sequence while terminating at equipment ends. Record of connection details shall be maintained. Conductor shall be shaped properly while terminating and no sharp bend shall be given. Where numbers of cables are connected in parallel, proper tests shall be done before connecting so that no cross connection is made. No phase crossing shall be allowed for making the connection.

g) Cables shall be supported adequately at the entry to cable box/equipment so that load of cable does not come on cable gland.

h) All cables shall be meggered (checked for insulation resistance) before and after jointing and insulation resistance values recorded.

i) While terminating at equipment end, each core shall be properly tagged with numbering ferrules as per nomenclature given in the drawings. Wires shall be dressed and clamped neatly. Bolting shall be done properly.

5.8 Earthing

5.8.1 General

a) Painting of all earth strip joints with anti-corrosive paint shall be carried out as per details given in the respective drawings/specifications and instructions of owner/Engineer-in-Charge.

b) All electrical equipment rated 415V and above shall be connected to earth bus by two separate and distinct earth connections. All equipment rated 240V and below shall be earthed with single earth conductor.

5.8.2 Specifications

a) Earthing conductor above ground shall be of aluminium/copper wire bare or insulated or strip. Earthing conductor buried in ground shall be of G.I. or PVC insulated aluminium/copper cables. Sizes of earthing conductors shall be according to specified drawings. All earthing installations shall conform to IS: 3043 and other relevant standards.

b) The earthing wires or strips shall be laid along the cable racks, cable trenches, risers and supports. Underground conductors shall run at a depth of 600 mm below ground level. Where these conductors run along with cables, they shall be laid at the same depth as cables. Where conductors

 All rights reserved

run on wall, ceilings, they shall be laid on clamps or brackets made out of Al/GI strips.

c) Wherever earthing conductor is passing through floor, walls etc., the conductor shall be taken through PVC/GI pipes.

d) All paints, enamel etc. shall be removed from point of contact before making connections.

e) Connections between Al/GI strips shall be done by welding for connecting Al/Cu/GI wire. For connecting Al/Cu/GI wires, tinned Cu Socket shall be crimped on the wire. At the equipment end, connections shall be done by bolting. However, connections between GI strips shall be done by welding. Connection between Al/Cu & GI shall be done by bolting. Graphite grease shall be applied on contact surfaces.

f) Epoxy resin paint or bitumen shall be applied on welded or bolted joints to prevent corrosion and taping done as indicated in the drawing. Connections between Al/Cu wires shall be done by crimping weak back Al/Cu ferrules.

g) Earth electrodes shall be provided as per drawings/specifications. Work includes excavation of earth, installation of electrodes and test links etc. supply and filling of charcoal and common salt, back filling of earth and removal of extra earth. It also includes making brick wall around the electrode and cover according to drawings/specifications. The testing links shall be grouted on brick wall and connections with earth electrode and conductors shall be made. Distance between two electrodes shall not be less than 10 meters and may be located 4 M away from building foundation.

h) Earth pits for equipment earthing, transformers neutral earthing and lightning protection shall be separate. However, these pits shall be inter-connected.

5.9 Lightning Protection

5.9.1 Air termination rod shall be installed as indicated in drawings.

5.9.2 Fixing of termination rod on roof with Al sheet shall be done with crank bolt and watertight compound provided.

5.9.3 Laying of down conductors and connection shall be done as per drawings. Lightning Protection installations shall conform to relevant IS.

5.9.4 Earthing of static equipment like vessels, chimneys etc. where no termination rod and down conductor is provided, shall be done by connecting the equipment base to earth pit by GI/Al strip or PVC insulated Al/Cu wire. Clamps shall be bolted or welded to the base of the equipment.

5.9.5 Structures for the storage, protection or use of highly inflammable solids, vapour or gases or in which highly inflammable or explosive dusts or vapour may be present shall be protected against lightning. Such protection is to be carried out as per prevailing Indian/IEC Standards. The following shall be taken care of:

a) All major members of metallic structure shall be bonded together and connected to the lightning protective system. Such connections shall be made at least in 2 places.

 All rights reserved

b) Metallic pipe, electrical cable sheath, steel ropes, rails etc. entering the structure but not in electrical contact with earth, shall be bonded to the lightning protective system.

c) All metal forming part of the structure, its reinforcement or its equipment shall be bonded or welded together and connected in two places with the lightning protective system.

d) The bonding ring conductor shall be run externally about 0.5 M above ground level in order to provide a convenient point for the connection. The ring conductor shall be visible throughout its length. The arrangement of bonding shall be such as to avoid possible sparking.

5.10 Plant Lighting

5.10.1 The electrical installation covered by this specification shall conform to relevant Indian Standards and Codes of practices.

5.10.2 Where a number of cables are run together inside or outside the plant, the wiring shall be supported on GI/Al trays/steel structures.

5.10.3 Erection of light fittings, plug sockets etc. - Fabrication of supports for lighting fittings, sockets, junction boxes shall be done as per the relevant drawings/instructions given by the consultant/owner and same shall be grouted to walls, ceiling or welded to insert plates, steel structures etc. Insert plates on ceilings shall normally be provided. However, if required, the contractor shall, under instruction of the consultant/owner weld such supports to the reinforcement rods after exposing by chipping off concrete at no extra cost. Installation of lighting fittings includes control boxes, where supplied separately, and shall be done as per drawings. Before installation, checking of internal parts, assembly of accessories shall be done as per manufacturer's instruction/drawings.

5.10.4 The explosion-proof fittings shall be earthed through third core of the cable used for wiring. The third pin and body of 15 amps switch sockets shall be earthed similarly.

5.10.5 Installation of explosion proof equipment shall be done strictly following manufacturer's instruction or relevant Standards. Cable termination shall be done as per relevant drawings. No drilling of holes or any change in construction of equipment or part thereof shall be done.

5.10.6 Wiring for AC supply light and plugs may be fixed in the same brackets but wiring for emergency DC supply lights will be fixed separately. In a circuit controlled by one switch in Group Control Switchboard, there will be a number of points. Drawings for lighting layout give only tentative location of fittings and wiring route shall be decided in consultation with consultant/owner. Wiring of circuit shall be bunched together to the extent possible in the same route.

5.10.7 For wiring and laying of cables, Cl. 5.8 shall be referred. Cable for wiring, light points, socket outlets, shall normally be laid along wall, ceilings and structures on suitable brackets made out of M.S./Al sheets or strips. Connections to the points in one circuit shall be taken through junction boxes. Junction boxes shall be suitably located for branching off from the circuit to the individual point. Wherever

 All rights reserved

indicated, cables may be laid directly on walls, ceilings etc. by clamping on saddles.

5.10.8 Terminations shall be done in a manner as detailed in Cl. 5.9. Wherever indicated, the wire can be drawn through PVC bushings provided in the fittings. Relevant drawings may also be referred to.

5.10.9 Lamps shall be installed after installation of fittings and wirings.

5.10.10 All light fittings and corresponding control switches shall be numbered in a permanent way as instructed by consultant/owner/engineer-in-charge.

5.11 **Street Lighting**

In addition to the requirements stated in Clause No. 5.12, the following are also involved:

5.11.1 Excavation of earth, pouring of concrete foundations, erecting, aligning and grouting of poles.

5.11.2 Assembly of arms, fixing of lighting fittings, accessories like fuse carrier, control box etc.

5.11.3 Laying of cables directly underground as per Cl. 5.8 and connecting to Junction boxes and lighting fittings as per Cl. 5.9.

5.12 **Installation of Cable Trays/Risers/Supports**

5.12.1 The fabrication work shall be done as per drawings/specifications/sketches in an approved manner and to the complete satisfaction of consultant/owner/engineer-in-charge. The contractor shall take necessary care to avoid wastages. Scrap shall never exceed the permissible limit.

5.12.2 Erection of fabricated racks, risers, cable supports etc.

a) Erection of racks and risers for cable supports shall be done along the cable routes as indicated in the drawings. The contractor before erection shall check the route for any obstruction like process pipelines, structures, equipment etc. In case obstructions are noticed, the matter shall be brought to the notice of consultant/Owner in writing and racks shall be re-routed as per his instructions.

b) As and where indicated in the drawings, supports for racks, risers etc. shall be clamped/welded on the steel structure, such as MS beams, pipe trestles, insert plates provided in the RCC column etc. for erection of racks.

c) Wherever indicated, supports for racks, risers, shall be grouted on walls. Racks & risers shall be installed on such supports and these shall be welded properly.

d) Opening on walls/floors shall be provided where racks/risers are crossing floors/walls.

 All rights reserved

e) Heavy channels, risers may also be grouted on the floors in addition to supports provided from walls, ceilings and steel structures.

f) As indicated in the drawings, racks and risers shall be erected either in multi-tier or single-tier formation.

5.12.3 Erection of supports in Trench

a) Supports and Hangers shall be grouted with rag bolts on the walls of prepared concrete trench. Insert plates shall be supplied by owner/consultant.

b) Pockets on walls, floors for erection of racks, etc. shall be provided where such racks, risers are crossing floors and walls. In prepared trench wall, pockets shall be provided for grouting rag bolts. But if needed the contractor shall arrange to make suitable pockets or modify pockets already provided for grouting the cable supports and/or erection of riser, racks etc. at no extra costs.

c) Wherever insert plates are not provided, but required for support of cable rack, the contractor shall weld such plates to the reinforcement MS rods. This shall be done by chipping the concrete for exposing the reinforcement MS rods and thereafter welding the plates and making good the concrete chipping by plastering.

5.12.4 The pipes will have to be bent (wherever required) and fixed/embedded in floor, wall and ground for laying the cables. Neoprene bushes shall have to be fixed at the end of such pipes.

5.12.5 GI/Al trays of different sizes shall be cut in size and fixed on racks and risers. Supports for the main cable racks shall be provided by the owner. However, supports for small branch cable racks & risers may have to be fabricated by the contractor. Fixing of trays shall only be done after erection/welding/painting of the supports as required.

5.12.6 Erection of support frames for miscellaneous equipments, base channels for switchboards etc. shall be carried out at no extra cost.

5.12.7 Dismantling of steel fabrication and re-erecting as required by consultant/owner/engineer-in-charge shall have to be carried out.

5.12.8 Dismantling of cable racks and re-erecting shall have to be carried out.

6.0 GENERAL PROCEDURE FOR TESTING & COMMISSIONING

6.1 Before proceeding with the work, contractor shall fully inspect all installed Electrical Equipment for completeness, signs of damages, defects etc. and shall get all discrepancies duly recorded by Owner/Consultant, failing which no claims by the contractor shall be entertained at a later date and shall be required to make good/repair/replace the damaged components at no extra cost.

 All rights reserved

6.2 **Cleaning and Regular Maintenance**

Till the commissioned equipment is finally accepted by Owner/Consultant/Engineer-in-Charge, Contractor shall be responsible for regular cleaning and maintenance of all electrical equipment. The maintenance job is to be done in consultation with or on advice from the Owner/Consultant.

6.3 **Testing & Commissioning Requirements**

6.3.1 All works shall be carried out in accordance with the drawings, suppliers' instructions/manuals for equipment and as per relevant standards and codes of practices.

6.3.2 Before conducting test on any equipment, the contractor shall obtain permission from Owner/Consultant/engineer-in-charge and all tests shall be conducted in their presence.

6.3.3 Records/results of each test shall be recorded by the contractor immediately after the test on approved Performa and counter signed by both the contractor and the owner's authorised representative.

6.3.4 Copies of the record shall be handed over to Owner/Consultant/engineer-in-charge.

6.3.5 The contractor shall commission all electrical equipment and carry out all pre-commissioning/commissioning tests inclusive of no-load and on-load tests on motors/generators and shall be responsible for final adjustments of relays, motors, instruments, starters, breakers etc. as per operational data supplied and as per directions of Engineer-in-Charge.

6.3.6 Painting

The contractor shall without any extra cost, touch up with paint all electrical equipment which are damaged/scratched during testing and commissioning work. The paint used shall match exactly painted surface of the equipment on which touch up is done.

6.3.7 All terminations, cable joints, which are opened for testing purposes shall be re-terminated and re-insulated to restore their original state.

7.0 TESTING & COMMISSIONING SPECIFICATIONS

7.1 These specifications lay down the testing and commissioning procedures to be followed for each type of equipment, over and above the general requirements laid down in specifications for erection.

Manufacturer's instructions and any other instructions of consultant/owner/Statutory bodies shall also be followed by the contractor during testing and commissioning.

The contractor shall maintain and furnish the records of all equipments i.e. HT/LT panels, motors, CT, PT, relays etc. including any special test as per manufacturer's manual.

 All rights reserved

7.2 Switch Boards

7.2.1 General Checks

a) Check all auxiliary contacts of breakers for proper make-break operation.

b) If necessary, make minor adjustments to circuit breakers mechanism, auxiliary contacts etc. for proper operation of circuit breakers. Proper greasing and lubrication or mechanism must also be done before final commissioning.

c) Check for termination of control circuit wiring as per drawing and ensure that the terminals at equivalent and panel are mechanically sound.

d) Ensure proper operation of all test operation switches and push button.

e) Check wiring of all space heaters, indication lamps bells, buzzers etc.

7.2.2 Insulation resistance test

a) Measure the insulation resistance of main bus-bars (Phase to phase & Phase to earth) with 5000 V, 2500 V and 1000 V Megger (IR values shall generally be not less than 100 MΩ, 50 MΩ and 10 MΩ respectively in case of 11 KV, 6.6/3.3 KV & 415 V).

b) Insulation resistance of circuit breaker shall be measured with 1000 V Megger.

c) Control wiring shall be tested with 500 V Megger (IR values shall not be less than 2 MΩ).

7.2.3 High voltage Test

The test shall be conducted on switchgear rated 3.3 KV and above. Test voltage shall be as per relevant Indian Standard. However, for AC High voltage test, the value shall be twice the working voltage of the switchgear plus 1000 V. This voltage shall be maintained for one minute. Each phase shall be tested in turn, with remaining phases earthed. After high voltage test, a further Megger test shall be made to make sure that insulation resistance to earth has not altered appreciably. The reading of second megger test shall be consistent with that of the first.

AC test voltage for 1 minute duration shall be as follows:
24 KV for 11 KV panel, 15 KV for 6.6 KV panel and 8 KV for 3.3 KV panel

7.2.4 Testing of current transformer

a) Insulation resistance to earth of secondary winding shall be tested with 500V megger (remove earth connection before test).

b) Check the polarity of C.T. – Connect zero centre voltmeter in the secondary winding, connect 6 V batteries with switch in the primary. Close the switch and from the kick of the voltmeter, ascertain the polarity.

c) Ratio test shall be carried out by injecting current in the primary and subsequently secondary side current shall be checked.

 All rights reserved

7.2.5 Testing of P.T. Insulation.

Testing of HT & LT side of PT shall be done with 1000 V & 500 V megger respectively (the value shall not be less than 100 MΩ, 50 MΩ & 10 Ω, respectively for the voltage rating 11KV, 6.6KV & 400V).

7.2.6 Testing of Relays

a) Checking of wiring shall be done according to Manufacturer's drawings. Check relay continuity at all taps also ensure plug bridge contact satisfactory.

b) Secondary injection test.

Use secondary injection test set incorporating timer. Testing of all protective relays such as but not limited to over current, earth fault differential, motor protection, directional feeder protection, under voltage relays etc. shall be done as per the procedure set by the manufacturers of the relays. All time delay relays shall be tested to verify their characteristics for IDMT and instantaneous relay pick up and drop off values shall be noted at various taps. Relays shall be tested at all taps. Errors shall be calculated and compared with permissible limits specified by manufacturers. Adjustment, such as in establishing circuit, shall be done as recommended by manufacturer. After testing, relays shall be set at values given by Consultant.

c) Timer relay shall be tested and calibrated and set properly.

d) All auxiliary relays shall be tested for proper operation.

7.2.7 Testing of Instruments

All indicating and recording instruments like Ammeter, Voltage meter, KWh meter etc. shall be calibrated. Zero error of each instrument shall be corrected.

7.2.8 Operational Tests

Conduct the following operational tests after putting the circuit breaker at test and service position. Check that the fuses of proper rating are put in control circuit as per wiring diagram.

a) Close and trip the circuit breaker several times with power or manually. In case of motor operated spring charged closing mechanism, check the operation of charging motor. Ensure that it cuts in/off properly.

b) Check the indication scheme: 'ON', 'OFF', trip circuit healthy, auto-trip indication etc.

c) Trip the breaker by operating the protective relays (operate contact manually).

d) Check the trip free feature.

e) Check the anti-pumping feature.

f) Check operation of voltage selector relay scheme for supply.

g) Check annunciation scheme for AC/DC power supply failure.

 All rights reserved

7.3 **Motor Control Centres/Power & Motor Control Centres**

In addition to checks and tests (wherever applicable) detailed under Clause No. 7.3 above, the following shall also be carried out:

7.3.1 Insulation resistance test of the main bus bars, starter units control wiring etc. shall be done with 500 V megger.

7.3.2 Each motor starter shall be tested for correct operation. All operational tests to verify sequence of operation, inter-locking and alarm indication schemes (by simulating the connection) shall be done.

7.3.3 Bi-metallic type thermal over load relay shall be tested at different settings. Current shall be injected through the thermal elements (three elements can be connected in series) at twice and thrice the set value and tripping time shall be noted. The values shall be compared with the data supplied by manufacturer.

7.3.4 Single-phase prevention relays shall be tested for proper operation.

7.3.5 Check that fuses of specified ratings are put in various outlets.

7.4 **Soft Starter Panel**

In addition to the procedure laid above in Clause Nos. 7.3 & 7.4, any other instruction given by the manufacturer shall also be followed.

7.5 **Panelled Equipments**

These include relay and alarm panels, Rectifier panels, Battery charger panels DC/AC distribution boards, conveyors/control cum power supply panels, UPS, inverter static power supply, Variable Frequency Drive and PLC. Details shall be indicated in project specific Schedule of Rates.

7.5.1 Test insulation resistance with 500 V megger.

7.5.2 All operational tests to verify function of each component like relays, switches etc. and sequence of operation, interlock, alarm system as per circuit diagram.

7.5.3 Invertors/Thyristor controlled panels, static power supply system units, Variable Frequency Drive and PLC panels shall be tested as per the instructions of manufacturer.

7.6 **Cables**

7.6.1 All HT (11KV, 6.6KV & 3.3KV) cables shall be tested for insulation resistance with 5KV/2.5KV motorized meggers and LT cables shall be tested for insulation resistance with 1000 V megger before and after termination. IR shall be measured between phases and between phase and earth. The voltage shall be applied for 1 minute.

7.6.2 All the 3.3KV, 6.6 KV and 11 KV cable joints shall be tested on high voltage as per IS: 1255 after making all termination and joints followed by IR test.

 All rights reserved

7.7 **Lighting**

7.7.1 Before energising any lighting circuit, the IR values (phase/phase and phase/earth) shall be recorded for entire wiring installation. The testing shall be done with 500 V megger. After switching on the power supply, load of each circuit shall be measured.

7.7.2 Illumination levels shall be tested and same shall not be less than the levels mentioned in Design Specification.

7.8 **Earthing**

The continuity of earthing and resistance of each earth pit and grid shall be measured with earth megger. The resistance of grid connecting all earth pits shall be less than one ohm.

7.9 **Miscellaneous Equipment**

Under this are included, exhaust fans, blowers, limit switches, vibrators, electro-magnets, air pressurisation unit etc. The following tests shall be conducted:

7.9.1 Measurement of insulation resistance

7.9.2 Check up the direction of rotation.

7.9.3 Operational test

7.10 **Motors/Generators**

7.10.1 General Checks

a) Check the alignment of motor/generator with the driven equipment/prime mover.

b) Check and calibrate motors/generators, safety switches, bearings/air temperature indicators, winding temperature indicators, water flow/air flow pressure meters, lubricating oil pump motors.

c) Check operation of space heaters.

d) For motor/generator standing idle for a long time, carry out overhauling, re greasing and drying.

7.10.2 Check the condition of grease in bearings and if required replace completely with fresh grease after proper cleaning of bearings. This work shall preferably be taken up before final alignment of motor with driven equipment.

7.10.3 In case of oil lubricated bearings, the bearing housing shall be flushed with oil and then filled up to the specified level. Check that oil ring rotates freely along with motor. In case of pedestal type journal bearing, it may be necessary to open the top cover, and check the bearings.

7.10.4 Fix up all accessories like techno-generators, water pressure relay, temperature detectors and any other safety switches after calibration.

 All rights reserved

7.10.5 Check that the shaft rotates freely. This shall be done after decoupling the motor from driven equipment.

7.10.6 Check air gap between rotor and stator (wherever possible) at three places at 120° apart on both sides of drive and verify with the figures furnished by the manufacturers. The variation shall not exceed 10% of average value.

7.10.7 Check the tightness of foundation bolts. Ensure pins are fitted before commissioning of motor.

7.10.8 Check that power and control cables are properly connected and tightened. All earth connections of the machine shall be checked.

7.10.9 In case of forced ventilated motor, clean the ventilation duct. Ensure that recommended flow and pressure of air is available to produce the required cooling effect. If the motor is provided with air to water heat exchanger, check for the adequate flow of water. If necessary, clean the exchanger to remove any obstruction to water flow. Check that there is no leakage from water cooler, pipe connections.

7.10.10 Check the space heater circuit. Space heaters shall be provided on all HT and special type LT motors. Switch on spare heater supply at least one week before the commissioning of motor. Wherever drain plugs are provided in motor body, open and check for water accumulation inside motor.

7.10.11 Testing

a) Insulation Resistance Test

The insulation resistance of LT motors shall be measured between the winding of the machine and its frame by means of 500/1000V megger. A minimum value of 1 MΩ for 400 V motors shall be considered a safe value.

3.3KV, 6.6KV and 11KV motors/generators shall be tested for insulation by 1000 5000 V megger and its value shall not be less than 1 MΩ for each KV. However, it is desirable that before commissioning the motors, the insulation resistance shall be improved substantially above the lower limits. The contractor shall carry out heating of winding as per the advice of the consultant/Owner. The following methods may be adopted.

b) Drying

i) Blowing hot air

ii) Placing heater or lamps around and inside, in case of small motors after making suitable guarding and covering arrangement so as to conserve that heat.

iii) Heating by injecting low voltage in the winding low voltage output of welding set shall be used. The winding shall be inter-connected so that current flows through each phase, and particular care shall be exercised to prevent local over heating. The voltage applied shall be suitably adjusted. The maximum temperature of winding, while drying, shall be 70° to 80°C by thermometer or 90° to 95°C by resistance method. Heating shall be done slowly first till steady temperature of winding is reached (may be within 4 to 8 hours depending upon size of

 All rights reserved

motor) once the steady temperature is reached, maintain it for some time.

iv) Check the insulation resistance which will drop first and then become steady. Hourly reading of IR shall be taken and temperature shall be recorded 1/2 hourly. If IR is reasonably steady, supply can be switched off. Measure IR under cold condition. Never keep the motor unattended during drying process.

v) For checking polarisation index of HT motor, use electric driven megger. Note IR value after 1 minute and 10 minutes. The ratio shall be compared with data supplied by manufacturer (but shall be not less than 2.5).

7.10.12 Operational Test

a) Check control gear and set the protective relays as per settings supplied by Consultant. It is preferable that before first no-load run, the settings may be kept lower than 100%. However, during load running, settings shall be restored to Normal. Simulation test shall be conducted on motor starter, circuit breaker (main fuses removed on CB at test position). All interlock shall be incorporated in the control system. Testing shall be done from local and remove control station and shall be ensured that the control system works satisfactorily. In case of any defect in the integrated control wiring the contractor shall locate and rectify such defects.

b) Any other tests recommended by the manufacturer for special type equipment like variable speed motors etc. shall be done.

7.10.13 No-load Test

Finally the motor shall be started on no load after decoupling. Check the direction of rotation and change if required. The motor shall be run for 8 to 10 hours. Voltage, starting current, and starting time shall be noted. Hourly reading of current, winding and bearing temperature, (for small motors body temperature to be measured by thermometer) shall be noted. Note vibration, excessive noise if any.

In case of variable speed motor, variation of speed shall be checked and regulation of speed noted.

7.10.14 After switching off the motor, the insulation resistance shall be measured under hot and cold condition.

7.10.15 If the no-load trial run is found satisfactory, the motor shall be run on load after adjusting the protective relay setting to 100% value. Note the starting time, load current, winding temperature etc. The temperature rise shall not be more than the specified value. Check for any excessive vibration or noise.

7.10.16 Generator shall be tested in the presence of manufacturer's representative only as per their instructions.

 All rights reserved

8.0 DOCUMENTATION

8.1 For the purpose of completion certificate, the following documents will be deemed to form completion document:

i) The technical documents according to which the work was carried out.

ii) Final check-list and completion report.

8.2 Three sets of construction drawings showing therein the modifications and correction made during the course of execution signed by Owner/Consultant/Engineer-in-charge.

8.3 Test certificates for the materials purchased by Contractor.

8.4 Material appropriation statement for the materials issued by Owner for the works and list of surplus materials returned to Owner's stores duly supported by necessary documents.

8.5 No claim certificate by the Contractor certifying that the entire work done by him under the contract has been measured and accepted for the final bill to his satisfaction and that he will have no claim(s) concerning any work(s) or part thereof performed by him under the Contract, to Owner except otherwise indicated in the final bill.

8.6 The completion certification shall be issued by Owner within 30 days of the Contractor furnishing documents listed in this clause jointly certified by Owner/Consultant and Contractor's Site Engineer.

9.0 HANDING OVER TO OWNER

9.1 The contractor shall hand over the complete installation as a whole. Minor details not specified or mentioned in the scope or schedule of rates but required to complete the job as a whole will have to be done by the contractor without extra cost. Any equipment/installation shall not be deemed as handed over to Owner until the same is complete in all respect and is accepted in writing by the Owner/Consultant.

9.2 The final acceptance of the work shall be after the demonstration of guarantees by the Contractor and Owner shall issue the final acceptance/taking over certificate upon fulfilment of the guarantees.

10.0 OBLIGATIONS & RESPONSIBILITIES OF CONTRACTOR

The contractor's obligations and responsibilities shall include but not limited to the following:

10.1 To deploy skilled, semi skilled and unskilled personnel in requisite numbers and as per scheduled programme so as to complete the WORK as per overall project schedule.

10.2 To deploy suitably qualified supervisors and engineers in requisite numbers to assure execution of good quality job as per best engineering practices and to the full satisfaction of Owner/Consultants/Engineer-in-charge.

 All rights reserved

10.3 To prepare detailed planning and execution schedule considering the availability of fronts and materials. This shall be reviewed by Owner & consultant and Contractor shall be required to keep updating the same (as per the instructions of Owner/Consultant/Engineer-in-charge) to take care of any changes in the availability of fronts and materials and to complete all jobs as per the overall project schedule. Owner/Consultant/Engineer-in-charge shall in no way be held responsible for such changes because such changes are deemed quite a common feature in any project of this size.

10.4 To check for quantity compliance between bill of materials and drawings for cable, structural, earthing materials etc. and intimate Owner/Consultant/Engineer-in-charge sufficiently in advance regarding discrepancies, if any.

10.5 Construction power shall be made available at one point. Arrangement for distributing the same to various areas for construction shall be the contractor's responsibility.

10.6 To arrange and supply all tools and tackles, consumables, instruments, erection materials & machineries etc. for handling erection, testing & commissioning of complete electrical installation. List of major tools and tackles required are as listed below:

i. Cranes, winches, chain pulley blocks etc. in required quantity and of suitable capacity.

ii. Trailers with prime mover/Tractor trailers.

iii. D-Shackles, slings, wire ropes etc.

iv. Water level, spirit level etc. for levelling and alignment.

v. Gas cutting sets

vi. Drilling/Grinding machines

vii. Jacks with spindles (for cable drums)

viii. Pipe bending machine

ix. Hydraulic crimping tools set

x. Hand crimping tools set

xi. Air blower/vacuum cleaner

xii. High voltage testing set.

xiii. Secondary injection testing set

xiv. 5 KV motorised Megger Insulation tester

xv. 500 V to 2.5 KV each rating hand operated 'Megger' Insulation tester

xvi. Earth resistance tester with leads and spikes

xvii. Clip on ammeters/tong testers

xviii. Tachometers/Tacho-generators (for RPM checking)

xix. Phase sequence meter

xx. Primary injection set up to 2000 amps., if required

xxi. Grease gun for greasing of motors

 All rights reserved

xxii. Wooden sleepers of proper size and in adequate numbers.

xxiii. Scaffolding materials as required.

xxiv. Any other tools and tackles and facilities required completing all the jobs as per ITB to the best engineering practices.

xxv. Drilling M/C for drilling hole in RCC Roof/Column for grouting expansion bolts.

xxvi. DG set for construction power

10.7 To arrange and supply all consumables (required for executing the under question) such as but not limited to the following in sufficient quantity, of required quality and in time to meet the schedules:

Electrodes, filler wires, industrial gases, such as oxygen, acetylene, diesel, petrol, kerosene, CTC, standard grease/lubricant for motor bearings, insulating tapes, compounds, solders, fluxes, rawl plugs, phil plugs, saddles & bars, ferrules, bricks, sand, cement, stone chips, clamps, tags, shims, hard wares, paints, thinners (as required), salt and charcoal (for each electrode pits), copper lugs for GI earth wires, cotton waste, marking cloth, sand papers, emery papers, thread, nylon ropes.

10.8 To arrange and supply storage tanks for drinking water so as to avoid any inconvenience that may be caused due to interruption in water supply at times.

10.9 To provide proper storage and security arrangements for Contractor's tools, tackles, equipments, materials etc. as well as equipment and materials issued by Owner/Consultant to Contractor. Owner/Consultant shall not be responsible for any loss or damage to items in the custody of Contractor at site for any reason whatsoever.

10.10 Completion of all repairs arising out of defective work done by Contractor Owner/Consultant/Engineer-in-charge may at his discretion require the Contractor to rectify certain defects in materials caused due to bad workmanship of supplier and/or during transportation. For such work of course, the payment modalities shall be settled by mutual agreement before starting such rectification jobs.

10.11 To maintain all the records for men, materials and execution of job as required by law as well as Owner/Consultant/Engineer-in-charge.

10.12 To get his work inspected by Owner/Engineer-in-charge and approved from statutory agencies such as but not limited to Electrical Inspector, Factory Inspector etc.

All co-ordination with Statutory Authorities shall be contractor’s responsibility. Only statutory fee required for approval shall be paid by the owner.

10.13 To make arrangements for services such as transport, medical, lighting, canteen etc. for working round the clock.

 All rights reserved

10.14 In addition to safety regulations indicated in this enquiry Owner/Consultant/Engineer-in-charge may issue certain safety directives, which shall have to be followed meticulously without any reservation.

10.15 To undertake and execute work and supply as per scope of work, scope of supply, to follow Technical Conditions including specification for electrical erection, specification for electrical testing and commissioning and as per schedule of rates. In honour all other obligations listed in other sections and sub-sections of this enquiry.

10.16 Reconciliation of materials issued to Contractor as directed by Owner/Consultant/Engineer-in-charge.

10.17 Handing over of the completed works to Owner/Consultant/Engineer-in-charge as per procedure laid down by Consultant.

10.18 To submit documentation forming part of request for issue of completion certificate.

10.19 Clearing the site after cleaning the areas where the Contractor executed the job, stored the materials and built his office, fabrication shop etc.

11.0 TERMS AND CONDITIONS

11.1 All the work shall be carried out in accordance with drawings supplied to the contractor and the entire installation shall conform to the Indian Electricity Rules/Regulations/Acts and with latest issue of relevant IS, Specifications, drawings & documents supplied by Consultant/Supplier/Owner and as per the directions of Owner/Consultant/Engineer-in-charge.

11.2 Contractor's Staff

The contractor shall employ all skilled, semi-skilled, non-skilled labourers necessary for erection, installation testing and commissioning. All electricians, cable jointer, wire man and others employed by the contractor shall be suitably qualified and must possess valid certificates/licences recognised by the competent authorities.

Engineer-in-charge at his own discretion may put any electrician/wireman/wire cable jointer to test for ascertaining the competence of the technician concerned and the contractor shall have to replace any staff found incompetent to execute the jobs as per requirements, in the opinion of the Owner/Consultant/Engineer-in-charge. The contractor shall also furnish a list of such staff and indicating whether he holds such competence certificate to supervise electrical installation jobs as required under Indian Electricity Rules and Regulations, and State Inspectorate Rules.

11.3 Contractor's Workshop

The Contractor shall set up his own workshop having facilities to undertake all jobs connected with, Erection, Testing and Commissioning. He shall provide all facilities at site to undertake steel fabrication work e.g. fabrication of cable

 All rights reserved

racks/trays, cable supports/brackets/frameworks/base frames for electrical equipment etc.

The contractor will be required to provide workshop and other facilities to undertake minor fabrication work, including conduit bending and threading, fixing rawl plugs, welding supports, making brackets, small foundation bolts, protective guards, and such other miscellaneous items as may be necessary for completing the erection, testing and commissioning jobs. The contractor shall also, on his own, set up adequate office, stores, godowns etc. for his work in the area/space provided by the Owner/Consultant/Engineer-in-charge.

11.4 Tools and Tackles

The contractor shall have to arrange all tools, tackles including various erection machineries and instruments for measuring, testing, calibrating etc. required for erection as well as for Testing and commissioning on his own, such as compressors, cranes, winches, jacks, chain pulley blocks, welding sets, oxygen, acetylene gas cutting set, drilling machines, grinders, pipe bending machines, dies for pipe threading, scaffolding materials, cable jointing/crimping tools, megger, ductor, filtering machines, earth tester, secondary injection sets, sub-standard meters for calibration of ammeters, voltmeter, oil testing-sets, Multi meters, phase sequence meters, HT test set, primary injection (if required), clip on ammeters (tong testers), techo-generators etc.

11.5 Materials

11.5.1 All materials shall be in contractor's scope of supply, unless indicated to be supplied by Owner. The contractor shall have to arrange at his own expenses all consumables required by him for erection as well as for testing and commissioning like Kerosene oil, petrol, CTC, grease, petroleum jelly, rawl plug, phil plug, screws/nails, wires for portable tools, lights, plugs, cotton waste, jute dusters, shims for alignment/levelling, cement, sand, stone chips, bricks, reinforcement rods, welding electrodes paint, insulating taps, compounds, solders fluxes, ferrules, nut bolts, washers, cable clamps, cable tags and such other materials contractor might need to execute the complete job. The contractor might need to execute the complete job. The contractor shall also provide foundation bolts, for all floor/wall mounting equipment as per requirement at site. All hard wares supplied by the contractor shall be of GI. All GI materials shall have a minimum zinc coating of 800 g/m^2 at any point on the surface.

11.5.2 All equipment and materials including Instruments/meters required for measuring, checking, testing and commissioning are included in the scope of the contractor and shall be arranged and supplied by the contractor himself

11.6 Inspection

11.6.1 Electrical Installation work shall be subject to inspection by Owner's/Consultant's engineers, statutory bodies like Electrical Inspector, Factory Inspector, and wherever applicable by equipment supplier's engineer. The contractor shall carry our without extra cost all damages/rectification/modification desired by the above engineers/inspectors or to make the installation conform to relevant Electricity Rules etc.

FORM NO: 02-0000-0021 F2 REV4 All rights reserved

11.6.2 Further the Owner/Consultant may reject any portion of the work considered defective or of poor workmanship and contractor shall make good these defects without extra cost.

11.6.3 Owner/Consultant reserves the right to get such repairs/replacements done from any other agencies in case the contractor fails to do the job within a period of 7 days after the request has been made to him in writing and the cost of such alteration/repair/testing shall be recovered from the contractor and will be adjusted against any bill due to the contractor.

11.7 Completion of work

Work shall be deemed to be incomplete until such certificates as required under statutory regulations are obtained and delivered to Owner/Consultant/Engineer-in-charge.

11.8 Clearing of Site

The contractor will be responsible for the final clearing of site after completion of erection works as well as after completion of jobs connected with testing and commissioning. He will return all excess materials such as cables, earthing materials etc. to the Stores under instructions from Owner/Consultant/Engineer-in-charge. All empty cable drums, packing materials, cut-pieces of cables, steel scraps, and other materials, supplied by Owner for the job shall be shifted to a suitable place by contractor as per instruction of Owner/Consultant/Engineer-in-charge. Contractor will also be responsible for demolition and clearance of temporary sheds and structures put up by him.
All clearance of unwanted materials shall regularly be done as per advice of the Owner/Consultant/Engineer-in-charge.

11.9 Materials utilisation statement and permissible wastage

After completion of the erection, the contractor shall submit to the Owner/Consultant a statement giving details of materials drawn from stores and quantity used in erection, balance quantity returned to stores and quantity of scraps for his checking & approval.

The scraps of steel shall not be more than 2% of total quantity used for erection. For cables, the quantity of scrap allowable is as follows:

a) 11 KV and 6.6 KV cables : 1% of actual quantity laid
b) 1000 volts & below grade power and control cables : 2% of actual quantity laid
c) Lighting cables only : 3% of actual quantity laid

Any cable cut piece less than 5 mtrs. and structural steel less than 1 mtr. shall be considered as scrap.

11.10 Civil Foundation

Owner/Consultant will give necessary civil foundations ready complete with location of foundation bolts, sleeves etc. before the contractor is expected to commence his work. Minor rectification and chipping etc. may, however, have to

All rights reserved

be carried out by the contractor, if found necessary while grouting the foundation bolts. Contractor shall check the foundations cleared by other agency; Owner/Consultant shall not be responsible for any delay. But all concrete cutting and chipping work necessary for fixing and grouting of base channels for switchgear and control panels will have to be done by the contractor.

12.0 MEASUREMENT

12.1 For all payment purposes, the measurement will be based on physical measurement. Wherever it is not possible to take physical measurement, payment shall be made on the basis of drawing. The contractor in the presence of Owner/Consultant/Engineer-in-charge will take physical measurement.

12.2 Measurement of weight/length/area/volume will be in metric system corrected to nearest kilogram/centimetre/square centimetre/cubic centimetre.

12.3 For structural steel works measurement and payment will be made on weight basis.

12.4 Measurement for cable laying shall be made on the basis of length actually laid between end terminations including that of loops provided and paid accordingly.

13.0 PRIOR APPROVAL OF THE MATERIAL TO BE SUPPLIED BY CONTRACTOR

All items to be supplied by the contractor shall be of superior quality and shall be of approved make. These shall be as per specifications and conforming to relevant Standards.

14.0 RECOVERY AGAINST OWNER'S UN-RECONCILED MATERIALS

The contractor shall be responsible for material utilisation statement. Any equipments or materials not reconciled shall be charged back to the contractor.

15.0 STATUTORY APPROVALS

All co-ordination at site with statutory authorities (including inspection of completed WORKS from statutory authorities) shall be in the scope of CONTRACTOR. Only statutory fees deposited by CONTRACTOR for approval of installations and works shall be reimbursed to the CONTRACTOR on production of documentary evidence.

16.0 GUIDELINES FOR SAFETY MEASURES

Requirement of electrical power for any construction activity is of prime importance. The utilization of power in any construction site shall be done with utmost care to avoid accidents due to electrical shocks, fire due to electrical short circuits. Electrical installation increase the risk of such accidents, if it is exposed to adverse environmental conditions i.e. presence of hazardous gases. Hence, it is absolutely essential to take extra precaution for such installation to ensure safety of personnel and equipments.

 All rights reserved

This standard gives details of required safety measures to be adopted for the electrical installations by all contractors during construction activities. Following are some general guidelines & check points that should be followed:

16.1 All electrical connections for electrical installations shall be carried out as per provisions of the followings latest codes and standards in addition to the requirements of statutory authorities and IE rules:

OISD – STD – 173 : Fire prevention and protection system for electrical installations

IS – 30 : National electric code

16.2 All electrical connections shall be done by a competent electrician having valid license and to the satisfaction of Engineer-in-charge and one competent licensed electrician shall be made available by contractor at site round the clock to attend the normal/emergency jobs.

16.3 All necessary personal protective equipment (PPE), Safety equipment shall be made available to use for persons employed by the contractors on the site and shall be maintained in condition suitable for immediate use. Protective equipment for head protection, body protection, eye protection, hand protection, hearing protection & respiratory protection shall be made available by the contractor. No loose clothing shall be allowed.

16.4 When workers are employed on electrical installations, adequate safety items/charts viz. fire extinguishers, insulating mats, hand gloves, multilingual (English, Hindi & local languages) caution boards, shock treatment charts and instruction plate containing location of isolation point for incoming supply, name and telephone number of contact person in emergency shall be provided in substation and near all distribution boards/local panels. The workers shall not wear any rings, watches & carry keys or other materials, which are good conductors of electricity.

16.5 When work has to be done on elevated places, towers, roofs, pipe racks & other lofty positions where plat-forms & other fall guards are not there, use of SAFETY BELT is compulsory. Safety Nets will prove very helpful in case somebody slipped from height.

16.6 All welding machines and switchboards shall be kept in well-ventilated and covered shed. The shed shall be elevated to avoid water logging. Use of flammable material shall be prohibited for construction shed; also flammable material shall not be stored in and around electrical equipments. Adequate clearance and operational space shall be provided around the equipment.

16.7 No work, however, small should be undertaken/started without obtaining valid work permit from the concerned department. Confined space entry should be done only by valid entry permit from the Engineer-in-charge. Safety permit shall be obtained before taking the temporary electrical equipment inside the hazardous area.

16.8 No work must be carried out on any live equipment. Electrical equipment should be considered live unless it is ensured that they are isolated & made dead/safe. A 'permit-to-work' shall be issued before any work is carried out. Don't tamper with

 All rights reserved

any type of electric switches/equipments or any other appliances or moving machinery installed in factory area without permission.

16.9 Before the contractor connects any electrical appliance to any plug/socket belonging to the other contractor/owner, he shall:

i) Indicate to the Engineer-in-charge that the appliance is in good working condition.

ii) Inform the Engineer-in-charge of the maximum current rating, voltage and phase of appliance.

iii) Obtain the permission of the owner dealing the sockets to which the appliance may be conducted.

16.10 The Engineer-in-charge shall not grant permission to plug-in until he is satisfied that:

i) The appliance is in good working condition and is fitted with a suitable plug.

ii) The appliance is fitted with a suitable cable having earth conductors.

16.11 All temporary installation shall be tested before energizing to ensure proper earthing, bonding and suitability of protection system and adequacy of feeders/cables.

16.12 Voltage for all portable equipment viz. drilling machine, temporary lighting etc. will not exceed 240 volts.

16.13 Earth leakage device shall be checked for operation regularly by temporarily connecting the series lamps. The operating current of earth leakage device shall not exceed 30mA.

16.14 All the electrical equipments should be properly earthed as per Indian Electricity Rules.

16.15 Use of hoisting machines & tackle including their attachments, anchorage & supports shall be good of mechanical construction, sound materials & adequate strength & free from patent defect & shall be kept in good condition & in good working order.

16.16 No welding/grinding/cutting/soldering or open flare/fire etc. should be done without valid safety permit issued by the Engineer-In-charge. While welding/grinding/cutting make sure that sparks & molten slag etc. don't fly or come into contact with combustible materials surrounding equipments, valves etc. i.e. make provision for collection of sparks by using 'Fire Blankets'.

16.17 Use of SAFETY APPLIANCES like safety goggles, canvas hand gloves, welding helmet, chrome-leather hand gloves, safety shoes, etc. during welding/chipping/grinding should be enforced.

16.18 The following design features shall be ensured for all electrical installation during construction phase:

i) Each installation shall have a main switch with a protective device, installed in enclosure adjacent to the metering point. The operating height of the

 All rights reserved

main switch shall not exceed 1.5M. The main switch shall be connected to the point of supply by means of armoured cables.

ii) The out going feeders shall be double or triple pole switch with fuses/MCB. Loads connected to three phase circuit shall be balanced as far as possible and load on neutral shall not exceed 20% of load in the phase.

iii) The installation shall be provided adequate protection against overload, short circuit and earth leakage by using suitable protective devices. Fuses wherever required, shall be of HRC type only. Use of rewireable fuses shall be strictly prohibited.

iv) Connections to the welding receptacles/hand tools shall be taken through proper switches, sockets and plugs.

v) It shall be ensured that all single phase sockets shall be 3-pin type only and all unused sockets shall be provided with socket caps.

vi) Contractor shall use 3 core (P+N+E) overall sheath flexible cables with minimum conductor size of 1.5 sq. mm. copper for all hand tools.

vii) Metallic distribution boxes with double earthing shall be used only at site. No wooden boxes shall be used.

viii) It shall be ensured that cables to be used for installation purpose shall be free from insulation damage.

ix) An independent earthing facility should preferably be provided within the temporary premises.

x) For local earthing, separate earth electrodes shall be installed near the supply point and earth continuity wire shall be connected to local earth plate for further distribution to various appliances. All insulated wires for earthing shall have insulation of green colour.

xi) It shall be ensured that structures shall not be used as a neutral. Separate core shall be provided for neutral earth.

xii) ON/OFF position of all switches shall be clearly marked/painted for easy isolation in emergency.

16.19 Don't check gas leaks with lighter, matches or other flame. Always keep gas cylinders away from direct rays of sun, hot place, welding, grinding & cutting sparks. Valves on cylinders should not be lubricated. Gas cylinders should be kept away from work place & Acetylene cylinders should be kept vertical. Cylinder should not be rolled on roads for transportation from stores or one place to another place, use suitable handcart for the purpose. It is prohibited to carry gas cylinder up-stair in the plant or in-side the vessel or confined spaces for cutting/welding job.

16.20 Permission of a supervisor before any excavation is a must. Also the presence of underground electric cables or any pipelines must be taken care of during excavation. Excavated earth must not be dumped within five feet. The further the better.

16.21 All the sewers or openings/cut-outs should be kept covered to avoid pit falls. Red illuminated signal should be displayed so that nobody goes near the pit/opening

 All rights reserved

during dark hours. Proper approaches/scaffoldings/ladders etc. must be provided to avoid falls.

16.22 Be careful to keep all aisles, passageways and stairways clean & unobstructed. All discarded metal & other scrap should be collected. Storage area for keeping equipments, machines & other raw materials should be isolated & properly protected. Combustible materials like wooden pieces, cotton waste, bags etc. should be immediately removed to safe places.

16.23 Sitting or walking on rail tracks, crossing between wagons, taking rest under stabled wagons, crossing the rail through the openings underneath the stationary wagons shall be strictly prohibited. Standing under a suspended load is very dangerous. It may slip & fall on you thereby causing serious injury & even death.

16.24 Hands should be thoroughly washed before touching anything that goes in your mouth. All concerned personnel at site should maintain a high standard of 'Cleanliness'. Smoking & carrying matchbox, cigarettes, lighter, bidis etc. shall be prohibited.

16.25 Unauthorized entry into any battery limit of plant shall be strictly prohibited. Reckless driving or other non-observance of traffic safety rules shall result into withdrawal of permission to carry vehicles in side factory.

 All rights reserved

TECHNICAL SPECIFICATION

MEDIUM VOLTAGE SWITCH BOARDS

All rights reserved

CONTENTS

All rights reserved

1.0 SCOPE

1.1 This standard covers the technical requirements of design, manufacture, testing at works and delivery in well-packed condition of Medium Voltage Switchboards.

1.2 This standard shall be applicable for the Power Control Centres, Power cum Motor Control Centres and Motor Control Centres.

1.3 This standard shall be read in conjunction with relevant Specification Sheets, Feeder details & Schematic diagrams etc.

2.0 STANDARDS TO BE FOLLOWED

2.1 The design, manufacture and testing of the equipment shall comply with the latest issue of the following Indian Standards, unless otherwise Specified. Equipment complying with equivalent IEC standards shall also be acceptable.

IS 8623	-	Specification for low voltage switchgear and control gear assemblies
IS/IEC 60947	-	Low-voltage switchgear and control gear (General Rules)
IS 5578	-	Guide for marking of insulated conductors
IS 10118	-	Code of practice for selection, installation and maintenance of switchgear and control gear
IS 11353	-	Guide for uniform system of marking and identification of conductors and apparatus terminals

Various components housed in the switchboards shall conform to the Indian Standard specifications as mentioned against the component details or IEC specifications.

2.2 The design and operational features of all the equipment offered shall also comply with the provisions of the latest issue of the Indian Electricity Rules and other Statutory Acts and Regulations, as applicable. The supplier shall, wherever necessary, make suitable modifications in the equipment to comply with the above.

2.3 Wherever any requirement, laid down in this standard, differs from that in Indian Standard Specification / IEC Specification, the requirement specified herein shall prevail.

3.0 SERVICE CONDITIONS

3.1 Ambient Conditions

These shall be as indicated in Design Specification-Electrical.

3.2 System Details

These shall be as indicated in Design Specification-Electrical.

4.0 OPERATING REQUIREMENTS

The Medium Voltage Switchboards shall be suitable for operating at the specified rating continuously, with the specified voltage and frequency variations under the ambient

All rights reserved

conditions indicated in Design Philosophy-Electrical, without exceeding the permissible temperature rise and without any detrimental effect on any part.

5.0 DESIGN AND CONSTRUCTIONAL FEATURES

5.1 General

5.1.1 The switchboards shall consist of an assembly of a series of floor mounting, identical, metal clad, dead front type sheet steel panels of unitized design. The panels shall be placed side by side to form a compact assembly and shall be extensible on either side.

5.1.2 The complete assembly shall be dust, damp and vermin proof having minimum degree of protection equivalent to IP-52 as per IS/IEC 60947.

5.1.3 The frame work of the cubicles shall be of bolted/welded construction. The minimum thickness of sheet steel shall be 2 mm for load bearing members, 1.6 mm for non-load bearing members and 3 mm for base channel. The doors and covers shall be fabricated from cold rolled sheets. Suitable reinforcement, wherever necessary, shall be provided.

5.1.4 The door hinges shall be concealed type.

5.1.5 All external hardwares shall be zinc passivated steel. The hardwares for fixing the removable parts shall be provided with retaining devices.

5.1.6 The doors and the removable covers shall be provided with non-deteriorating neoprene gaskets. Gaskets without any discontinuity shall be preferred. Gaskets shall be held in position in groove, in shaped sheet steel work or these shall be of U type. Adhesive cement, if used, shall be of good quality so that the gaskets do not come off during service.

5.1.7 All the components shall be accessible for inspection and maintenance without the necessity for removal of the adjacent ones.

5.1.8 The layout of the component inside the module shall be liberal to facilitate maintenance and interconnecting wiring between the components shall not be subjected to any undue stresses at the bends.

5.1.9 Mounting height of components requiring operations and observation shall not be lower than 300 mm and higher than 1800 mm.

5.1.10 Inter panel barriers shall be provided.

5.1.11 All the live parts which are accessible after opening of front cover/cable alley cover/back cover shall be properly insulated or provided with insulating barrier to prevent accidental contact. Removal facility shall be provided for all such parts.

5.1.12 Adequate arrangement for earthing shall be provided to safeguard the operator or other personnel from electric hazards under all conditions of operation.

5.2 Panel Arrangement

The Switchboards shall be in drawout, single front/double front execution, fully compartmentalised type and divided into distinct panels, each comprising of:

i) A completely metal enclosed bus-bars compartment running horizontally the top.
ii) Individual feeder modules.
iii) Enclosed vertical bus-bars serving all modules, in case of multi-tier panels.
iv) A vertical cable alley.
v) Separate horizontal enclosure for all auxiliary power and control buses.

All rights reserved

5.3 **Circuit Breaker Controlled Feeders**

5.3.1 The panels housing circuit breaker feeders shall be in single front draw out execution. The incoming and bus coupler circuit breaker feeders shall be in single tier formation while the outgoing circuit breaker feeders may be in double tier formation.

5.3.2 A suitable barrier shall be provided between the circuit breaker and the associated control, protective and indication devices including instrument transformers.

5.3.3 All the protective relays and meters shall be flush mounted type. The relays and meters pertaining to a particular circuit breaker shall be mounted on the same panel. Where it is not possible to accommodate all the relays and meters in the same panel, one metering panel shall be provided adjacent to the circuit breaker panel exclusively for that feeder. Location of these in the adjacent panel of other feeders shall not be acceptable.

5.3.4 A spacious cable chamber suitable for accommodation, support and termination of required number of power cables shall be provided at the back. No bare bus-bars or live connection shall intrude into the cabling space.

5.3.5 The switchboard shall be provided with following inter locks and safety features:

i) It shall not be possible to open the compartment door unless the breaker is drawn to isolated position.

ii) The withdrawn and engagement of a circuit breaker shall not be possible unless it is in open position.

iii) The operation of a circuit breaker shall not be possible unless it is in fully service, test or isolated position.

iv) It shall not be possible to close the circuit breaker in service position unless all auxiliary and control circuits are connected.

v) A breaker of the lower rating shall be prevented from engaging with the stationary element of higher rating.

vi) Insertion of the manual mechanism shall render the motorised mechanism in operation.

vii) Circuit breaker ‘ON’, ‘OFF’ indication shall be provided at the back of each panel. Alternatively, alarm shall be provided in case panel back door is opened with breaker “ON”.

viii) Caution nameplate shall be provided at the back of incomer’s panels where terminals are likely to remain live and isolation is possible only from remote end.

ix) Automatic safety shutter, with Padlocking facility for locking in closed position, to completely cover the spouts for the bus-bars and cable connection when the breaker is withdrawn.

5.4 **Switch/MCCB Controlled Feeders**

5.4.1 The panels housing motor starter or other feeders shall be draw out type in single front or double front execution.

5.4.2 All components of one feeder shall be mounted on a rigid sheet steel chassis.

5.4.3 Each panel shall be divided into a number of modules in tier formation placed one above the other. These modules shall be closed on all sides.

5.4.4 The modules shall be so placed that largest one is placed at the bottom of the panel. Type modules shall be at least 300 mm from the base channel.

5.4.5 The number of modules shall be so decided that the cables in the cable alley are not over crowded. However the number of module in any panel shall not exceed six.

All rights reserved

5.4.6 The minimum size of module shall be 300 mm and 200 mm for starter and switch fuse feeders respectively.

5.4.7 The minimum clear width of cable alley shall be 250 mm.

5.4.8 For MCC rated above 630 Amp. The incomer and bus coupler modules shall be located in individual single panel. For MCC rated for 630 Amp. and below the incomer and bus coupler modules shall be half the panel size.

5.4.9 The module door shall be so interlocked that it shall not be possible to open the door with switch in closed position and close the door unless the module is fully plugged in. Defeat interlock facility shall be provided.

5.5 Special Features of Draw out Modules

5.5.1 The module shall be fully draw out type with sheet steel chassis moving freely on the guides. Chassis of the same size shall be fully interchangeable.

5.5.2 The module shall have the following distinct mechanical positions:

i) Service -- In which both power and control contacts shall be made.

ii) Test -- In which power contacts shall be isolated but control contacts shall be made.

iii) Isolated -- In which both power and control contacts shall be Isolated.

Maintenance position shall be preferred.

5.5.3 Each position shall be clearly marked. Padlocking facility shall be provided to padlock the chassis in any of the position.

5.5.4 The movement of the chassis from one position to the other shall be controlled by using an appropriate racking mechanism. Stopper shall be provided to prevent over travel of the chassis beyond the isolated position.

5.5.5 The guiding system shall permit smooth movement of the module and the power and control contacts shall be self-aligning type so that accurate alignment of the contacts is ensured.

5.5.6 No wiring shall be taken to the door. Only the actuators of the push buttons and switches, lenses for the indicating lamps and Perspex cover for meters shall be mounted on the door.

5.5.7 The power contacts shall be of plug-in/stab-in type made of silver plated copper, spring loaded and of adequate current carrying capacity. The contacts shall be so designed that contact pressure is maintained both under normal and short circuit conditions.

5.5.8 The parting contacts, both on bus-bar side and outgoing cable side, shall always be copper to copper and both sides silver plated. A bimetallic strip shall be used where two dissimilar materials are in contact.

5.5.9 The drawout type mechanism shall be screw racking in and out mechanism with handle to be provided for the same and not pull and push rack in rack out arrangement.

5.6 Bus-Bars and Connections

5.6.1 The bus-bars shall be for three phase and neutral. The main bus-bars and connections shall be made of high conductivity Aluminium alloy conforming to grade E 91 E of IS 5082 / electrolytic grade copper of rectangular cross-section. Auxiliary bus-bars for control supply, space heater supply etc. shall be made of electrolytic copper.

All rights reserved

5.6.2 The horizontal bus-bars shall be insulated with heat shrinkable PVC sleeves of reputed make to protect against approach to live parts. The vertical bus-bars shall be sleeved or shrouded by barriers. Removable type insulating shrouds shall be provided for all joints of horizontal bus-bars.

5.6.3 The bus-bars shall be amply sized to carry the rated continuous current under the specified ambient temperature without exceeding temperature limits specified in IS: 8084. The thermal rating of the bus-bars shall be designed to withstand the system fault current for 1 second without exceeding the limiting temperature of 200ºC for bare Aluminium/Copper. Calculation for bus-bars sizing shall be furnished along with the offer.

5.6.4 Horizontal bus-bars shall be of the same cross-section through out. Stepped bus-bars shall not be acceptable.

5.6.5 The bus-bars shall be arranged and colour coded according to IS: 5578 / IS: 11353.

5.6.6 The bus-bar chamber shall be sufficiently spacious and shall have separate screwed covers for maintenance purpose.

5.6.7 The bus-bars shall be rigidly supported at equal intervals to withstand maximum short circuit stresses. The supports shall be of moulded construction with built-in anti-tracking barriers. The support materials shall be of DMC or fibreglass reinforced thermosetting plastic.

5.6.8 Bus-bar joints shall be between the two transporting sections only.

5.6.9 A minimum of two bolts shall be used in bus-bar joints. Only high tensile electric galvanized bolts, nuts and washers shall be used.

5.6.10 In case of Aluminium bus-bars, all joints shall be suitably treated to avoid oxidation of contact surfaces and bimetallic corrosion.

5.7 Earth Bus

A continuous earth bus of Aluminium, running along the entire length of the lower part of the switchboard shall be provided with lugs at two ends for external connections. The minimum size of earth bus shall be suitable for carrying three phase fault current for 1 sec.

5.8 Bus Duct

5.8.1 Suitable extension of bus-bars in proper phase sequence on the top or bottom as specified in Specification Sheet, with the connecting bolts shall be provided where connection of transformer to switchboard is specified to be through bus duct.

5.8.2 Bus duct between two halves of a switchboard, if required, shall be supplied by the switchboard manufacturer. The bus-bars of interconnecting bust duct shall be similar to the main bus-bars of the switchboard and as specified above.

5.8.3 Bust duct between transformer and incoming breaker panel, if included in Vendor's scope, shall conform to TS-8062.

5.9 Clearances and Creepage Distances

5.9.1 The clearances and creepage distances shall not be lower than the values specified below:

i) Minimum clearance between two live conductors -- 20 mm

All rights reserved

ii) Minimum clearance between live parts and accidentally dangerous part -- 20 mm

iii) Minimum creepage distance -- 28 mm

5.9.2 The clearances and creepage, as specified above, shall definitely be maintained in the bus-bar system. Provision of bus-bar insulation, separators or barriers shall not be considered to reduce the clearance from the values specified above.

5.9.3 At the termination points in the equipment e.g. switches, contactors, thermal relays etc. It is realized that above clearances may not always be possible to be maintained. All such points, where above clearances and creepage distances are not possible to be maintained, shall be insulated or taped.

5.10 **Insulation**

5.10.1 The insulation used shall be non-hygroscopic and may be of porcelain, epoxy resins or fibreglass moulded with plastic. It shall be of adequate electrical, mechanical and thermal strength to give trouble free service during normal operation and short circuit conditions.

5.10.2 The insulation shall be treated suitably to withstand the tropical conditions and atmospheric pollution.

5.11 **Power Wiring**

5.11.1 The connections from bus-bar to individual functional unit on the modules shall be of PVC insulated flexible copper cables or taped Copper/Aluminium strip.

5.11.2 The power wiring size shall be decided based on rating of the switch/breaker after using a rating factor of not more than 50% over the current rating in free air.

5.11.3 Power wiring size selected for breaker controlled module shall also be able to withstand full short circuit current for duration of 0.25 sec.

5.11.4 In any case minimum size of power wiring shall not be less than 4 sq. mm copper.

5.11.5 The size of connection from incomer to horizontal bus-bar and from horizontal bus-bar to bus-coupler shall not be less than the size adopted for horizontal bus-bar.

5.12 **Control Wiring**

5.12.1 The switchboard shall be completely factory wired and ready for external connections.

5.12.2 The wiring shall be carried out with flexible stranded PVC insulated copper conductor cables of 1100 Volt grade. The size of wires shall be as follows:

C.T. Circuit -- 2.5 sq. mm

V.T. and Control Circuits -- 1.5 sq. mm

5.12.3 All wiring shall be provided with dependent both ends marking as per IS: 5578. Numbered ferrules, reading from the terminals outwards, shall be provided at both ends of all wiring for easy identification. These shall be interlocking type plastic ferrules.

5.12.4 Control wiring circuits, fed from a supply common to a number of panels, shall be so protected that failure of a circuit in one panel does not effect the operation of the other panels.

5.12.5 The wiring to the equipment mounted on the doors shall be carried out with flexible multi strand copper conductor cable and so supported that on opening of the door there is no undue strain on wire leads.

All rights reserved

5.12.6 The control cables shall be neatly arranged and property supported.

5.13 **External Cable Termination**

5.13.1 All power and control cables shall enter the switchboard from the bottom. Sufficient space shall be provided for ease of connection and termination of cables.

5.13.2 The type, number and sizes of cables shall be as indicated in Feeder details.

5.13.3 Double Compression type cable glands along with the cable lugs as required shall be provided for termination of cables.

5.13.4 The cable glands shall be of rolled Aluminium or nickel plated brass heavy duty double compression type and shall be mounted on a removable gland plate, provided at a minimum height of 75 mm from the bottom of the switchboard. Two number spare knockouts of size 20 mm shall also be provided on the gland plates for future use. Gland for termination of single core cables shall be nonmagnetic type.

5.13.5 For all power cables, crimped type Aluminium lugs for Aluminium cables and tinned Copper lugs for Copper cables shall be provided.

5.13.6 The terminal blocks shall be pressure clamp type up to 35 sq. mm cable sizes and bolted lug type for higher sizes of cables. These shall be protected type and rated for 1100 Volts service. The minimum current rating of terminal block shall be 16 Amp. The construction shall be such that after the connection of cables by means of lugs, necessary clearance and creepage distance are available.

5.13.7 Where more than two cables in parallel are required to be terminated, a system of bus links shall be provided with adequate clearance and spacing.

5.13.8 Suitable clamps to support the vertical run of cables shall be provided.

5.13.9 The terminal block shall be grouped according to circuit functions and suitably numbered. 20% extra terminals shall be provided in the terminal block.

5.13.10 For power connections, suitable marking on the terminals shall be provided to identify the phases.

5.14 **Feeder Details**

5.14.1 The requirements of incomer, bus coupler and outgoing feeders shall be as indicated in the single line diagram, feeder details and corresponding schematic diagrams.

5.14.2 Interlocks shall be provided between incomers and bus section panels. The interlocks shall be either electrical or mechanical type. In addition, arrangement for defeating the interlock shall also be provided to facilitate manual changeover.

5.14.3 Auto changeover scheme, wherever specified, shall be provided.

5.15 **Dummy Panels**

Dummy panels complete with bus-bar system in 400 mm width may be required for which unit price shall be indicated.

5.16 **Control Power Supply**

5.16.1 D.C. Power required for closing, tripping and indication of circuit breaker feeders shall be supplied at the bus coupler panel through two completely separate circuits by owner, one for tripping and other for closing and indication.

All rights reserved

5.16.2 For receiving each external control supply, a double pole miniature circuit breaker shall be provided. This power shall be distributed inside the switchboard for each circuit breaker feeder having its MCB unit.

5.16.3 Reference schematic diagram for A.C. control supply through control transformer for switchboards with buscoupler (PDS E: 412) shall be suitably modified such that control bus shall have option to switch to other bus control supply for redundancy in case of failure of auxiliary transformer and isolation of auxiliary transformer to be from incoming and outgoing to be made possible by suitably rating MCB.

5.16.4 Control supply for all motor feeders shall be fed by MCB and not fuses.

5.17 **Space Heater Power Supply**

5.17.1 Panel space heater shall be fed from a separate bus common for the whole board. This bus shall be fed from owner's supply for which a double pole MCB shall be provided in bus section panel.

5.17.2 Power supply for space heaters of motors shall be tapped from this bus by means of a MCB located in the motor feeder compartment. These MCBs shall be of triple pole and rated for 15 Amp.

6.0 COMPONENT DETAILS

Components of the switchgear shall ensure type of coordination 'C' as per IS:60947 (Part 4/ Section 1). The make of the components shall be as specified elsewhere in the NIT.

6.1 **Circuit Breaker**

6.1.1 The circuit breakers shall comply with the requirement of IS/IEC 60947.

6.1.2 All circuit breakers shall be of P2 (0-3 min - CO - 3 min - CO) category, capable of carrying the specified current at the site conditions and making/breaking of the system fault current.

6.1.3 Type test certificates from an independent testing authority shall be furnished along with the offer for each circuit breaker rating and type.

6.1.4 The circuit breakers controlling motors shall be suitable for DOL starting and stopping of induction motor a number of times.

6.1.5 The circuit breakers controlling capacitors shall be suitable for energizing and de-energizing the rated capacitor bank.

6.1.6 Incomer & Bus coupler circuit breakers shall be of the 3 phase, 4 pole horizontal draw out, horizontal isolation, air break type whereas motor feeder breaker shall be of the 3 phase, 3 pole horizontal draw out, horizontal isolation, air break type.

6.1.7 The circuit breaker shall be suitable for electrical or manual closing as specified. Manual operated breakers shall have independent manual spring closing mechanism. In case of electrically operated breaker, it shall have motor wound spring mechanism. In all cases tripping shall be by means of shunt trip coil.

6.1.8 All circuit breaker units of the same rating shall be physically and electrically interchangeable.

6.1.9 The circuit breakers shall be electrically and mechanically trip free and provided with anti-pumping feature.

All rights reserved

6.1.10 Provision shall be made for slow closing for maintenance purposes. A suitable handle shall be provided one for each board for this purpose.

6.1.11 The circuit breakers shall have three positions i.e. service, test and isolated with the cubicle door closed. Necessary stoppers shall be provided to prevent the excessive movement of the breaker cradle than desired for the position. Service and test positions of the breaker shall have monitoring switch having 1NO+1NC contacts.

6.1.12 The circuit breaker shall be provided with emergency manual trip device, mechanical 'ON', 'OFF' and 'ISOLATED' position indicators and operation counter.

6.1.13 A maintenance truck/device for raising, lowering and withdrawal of the circuit breaker shall be supplied for each switch board.

6.1.14 The arc interrupting devices shall be capable of interrupting satisfactorily current from zero to the rated interrupting current when used on predominantly capacitive or inductive circuits, without requiring excessive maintenance of the contacts. The arc shall be restricted within the interrupting chamber and no emission of flame shall be allowed which may cause electrical breakdown or damage to insulation on the apparatus.

6.1.15 The main contacts shall be self aligning, adjustable and replaceable type.

6.1.16 The arcing contacts shall be easily accessible for maintenance and inspection and shall be easily replaceable type. They shall be provided with, contact face of special arc-resisting and non-pitting metal.

6.1.17 Mechanical safety interlock shall be provided for safe operation and movement of the breaker.

6.1.18 The circuit breakers shall be provided with minimum of four normally open and four normally closed auxiliary switch contacts, over and above those required for its own control scheme, for Owner's use. The contacts shall be wired separately to the terminal board.

6.2 Moulded Case Circuit Breakers

6.2.1 The circuit breaker shall conform to IS/IEC 60947 and shall be of P2 category having rupturing capacity as specified in Specification Sheet and mounted on a draw out chassis.

6.2.2 The circuit breaker shall be provided with spring assisted quick make quick break type manually operated trip free mechanism, mechanical 'ON', 'OFF' position indicators, thermal tripping devices of inverse characteristics, instantaneous short circuit tripping devices and necessary auxiliary and alarm switches. The MCCB Chassis shall be provided with service, test and isolated position and automatic safety shutter.

6.2.3 The thermal and short circuit tripping devices shall be adjustable type.

6.2.4 When used for motor circuits, shunt trip device shall be provided and the let through power of controlling MCCB shall be lower than the respective contactor.

6.2.5 In addition, under voltage trip shall be provided.

6.3 Switches

6.3.1 The switches shall be motor duty type AC 23 Category and shall comply with the requirements laid down in IS/IEC 60947. Switches up to 63 Amps shall be rotary type and those of 100 Amps. & above, link type.

All rights reserved

6.3.2 'ON' and 'OFF' position of the switches shall be indicated on the module. Provision shall be made to lock the switch in the 'OFF' position.

6.3.3 The fixed contacts shall be shrouded type. All contacts shall be silver plated.

6.4 **Fuses**

6.4.1 The fuses shall be of non-deteriorating HRC cartridge link type and shall conform to IS: 13703. They shall be suitable for the load and service required in the circuit.

6.4.2 One fuse puller shall be supplied along with each board.

6.5 **Air Break Contactors**

6.5.1 The Air Break Contactors shall be of Category AC3/AC4, unless otherwise specified, conforming to IS: 60947 and flapper type.

6.5.2 The dropout voltage shall not exceed 65% of rated voltage.

6.5.3 Each contactor shall be provided with auxiliary contacts as required. The rating of the auxiliary contacts shall be 5 Amps. AC or 1 Amp DC at the specified control voltages. The spare auxiliary contacts shall also be wired up to the terminal blocks.

6.6 **Bimetal Thermal Overload Relays**

6.6.1 The contactor shall be provided with three pole bimetal thermal overload relays, unless other-wise specified. The bimetal relays shall be of suitable range, ambient temperature compensated and shall be separate mounting type. They shall be adjustable through graduated scale and shall be provided with changeover contact. Thermal relays having long time/current characteristics, operated through saturated C.T.s shall be supplied, wherever required.

6.6.2 Bimetal thermal relays shall conform to IS: 3231 and IS/IEC 60947 and shall have built-in single phasing preventor.

6.6.3 The bimetal relays shall be provided with a manual resetting device resetable after opening module door. Auto reset thermal relays are not acceptable.

6.7 **Current Transformers**

6.7.1 The current transformers shall conform to IS: 2705.

6.7.2 C.T.s shall be Class F insulated and vacuum impregnated or resin cast. The C.T.s shall be rigidly mounted and shall be easily accessible for maintenance and testing.

6.7.3 The short time thermal withstand ratings of C.T.s shall be same as the thermal withstand rating of the breakers.

6.7.4 The C.T.s output shall be minimum 15VA for breaker feeders and 7.5 VA for the other feeders per phase and in any case, the output shall be adequate for the protection and metering duties involved with sufficient margin. The C.T.s shall have the following accuracies for the various applications:

	Application	**Class of accuracy as per IS: 2705**
i)	For metering service	- 1
ii)	For use with protective relays	- 5P

All rights reserved

iii) For use with restricted earth fault and differential relays - PS

6.7.5 The C.T. cores for metering and protection shall be separate.

6.7.6 The ratio of C.T.s shall be as specified in Feeder details.

6.7.7 All the C.T.s shall be provided with terminals and shorting links. One of the terminals of the C.T. shall be earthed. The polarity of the C.T.s shall be clearly marked.

6.7.8 Provision of Interposing C.T.s is not acceptable.

6.7.9 The C.T.s shall be capable of withstanding momentary open circuit on the secondary side without injurious effects.

6.8 **Voltage Transformers**

6.8.1 The V.T.s shall be Class F insulated and vacuum impregnated or resin cast conforming to IS: 3156.

6.8.2 The primary nominal voltage shall be equal to the system nominal voltage. The secondary terminal voltage shall be 110 V.

6.8.3 The primary and secondary winding shall be protected by HRC fuses in each phase except in the ground phase of the secondary side.

6.8.4 The V.T.s shall be mounted on separate withdrawable carriage. The accuracy Class of V.T.s shall be 1.

6.8.5 The rated output of each V.T. shall be adequate for the relays, meters and associated wiring connected to it and shall not be less than 50 VA per phase.

6.9 **Control Transformers**

These shall be air cooled Class F insulated and vacuum impregnated. The rating of control transformer shall be twice the hold on VA of all contactor/relays or 2.5 KVA whichever is high. It shall be free from hum and rigidly mounted. Epoxy cast transformers shall be preferred.

6.10 **Transformers for Kondorffer Starting**

These shall be three phase core type, Class F insulated and vacuum impregnated. Tapping at 90%, 80%, 70% & 60% shall be provided and terminals shall be brought out for easy change of tapping at site. The operating temperature shall not exceed 80ºC. The transformers shall be suitable for taking 7.5 times the specified full load current of the motor continuously for 120 secs.

6.11 **Relays**

6.11.1 All protective relays shall be of latest version, microprocessor based numerical type with communication port and interlinked with online energy management system. 100% redundancy shall be provided for communication.

6.11.2 Motor above 45KW shall be provided with electronic/numerical/microprocessor based relay in additional to thermal overload and fuse.

All rights reserved

6.12 **Timers**

6.12.1 The timers shall be electronic pneumatic or synchronous type with manual/auto reset features as per the functional requirements. The time delay shall be 'ON' delay or 'OFF' delay type as specified. The repeat accuracy shall be 0.5% or better.

6.12.2 All contactor fed motor feeder shall be provided with off delay timer to avoid tripping of motor in power dip situation.

6.13 **Single Phasing Preventor**

6.13.1 Single phasing preventor relay shall be of the current operated type, suitable for the system voltage. The relay shall not operate for normal system voltage but operate positively in the event of unbalanced voltage more than the normal. The relay shall not operate in case of total interruption of power.

6.13.2 The relay shall be fail safe, self reset type and provided with flag indication. The relay operation shall be independent of the motor rating, loading and speed.

6.14 **Instruments and Meters**

6.14.1 All instruments shall be flush mounting type with square face of 96 mm x 96 mm. They shall be tropicalized and dust tight.

6.14.2 Meters shall be digital multifunctional meters with communication port for energy management at remote location.

6.14.3 All ammeters and voltmeters, to be provided separately, shall have 0-90º scale and shall be moving iron spring controlled type of class 1.5 accuracy as per IS: 1248. The scale range of the ammeters and voltmeters shall be as indicated in the Feeder details.

6.14.4 In case of motor feeders, the ammeters shall be graduated uniformly upto C.T. primary current and with compressed end scale upto 6 times C.T. primary current. Red pointer shall be provided, which shall be adjusted at site for indicating full load current of the motor.

6.15 **Push Buttons and Control Switches**

6.15.1 The switches and push buttons shall conform to utilization category AC11/DC11 as per IS: 60947. The contact shall be rated to make, break and carry inductive current of 5 Amp at 415 V AC and 1 Amp at 220 V DC.

6.15.2 The control switches shall be spring return rotary type, unless otherwise specified and provided with pistol grip type handle. The control switches for circuit breakers shall be additionally fitted with lost motion devices and sequencing devices.

6.15.3 The selector switches shall be stay put rotary type and provided with oval shape handles.

6.15.4 The push buttons shall be of momentary contact spring loaded type with a set of normally close and open contacts. The push button for 'Start' shall be shrouded type and coloured green, stop push button shall be un-shrouded type and coloured red and other push buttons shall be un-shrouded type coloured black. The fixing ring shall be metallic white.

6.15.5 Emergency stop push buttons, if specified, shall be lockable in pushed position.

All rights reserved

6.16 **Miniature Circuit Breakers**

6.16.1 The miniature circuit breakers shall conform to IS: 8828 and shall be of duty category M-9.

6.16.2 It shall be provided with overload and short circuit protective devices in a heat resistant housing.

6.16.3 A certificate for short circuit rating and Current-Time tripping curve shall be furnished along with the offer.

6.17 **Signal Lamps**

6.17.1 Signal lamps shall be provided to indicate the various circuit conditions as shown in scheme drawings. The colour of the lamps for various functions shall be as follows :

Red -- Circuit breaker/switch/contactor closed.
Green -- Circuit breaker/switch/contactor open.
White -- Trip circuit healthy.
Amber -- Alarm and auto trip.
Blue -- Non-Trip

6.17.2 All lamps shall be of LED type with lumen output of 200 mili candela in axial direction.

6.17.3 Universal LED lamp with operating voltage of 24-240V AC/DC shall be supplied for ease of replacement and spare maintenance.

7.0 ACCESSORIES

7.1 The supply shall include the following accessories:

-- Maintenance truck/device for raising, lowering and withdrawal of circuit breaker, if required.
-- Fuse puller.
-- Test plug for relays.
-- Test plug for kWh meters.

7.2 **Space Heater**

7.2.1 Each vertical section shall be provided with a thermostatically controlled space heater, rated for 240 V, 50 Hz and controlled through double pole miniature circuit breaker.

7.2.2 Ammeter and indication lamp for panel and motor space heater ON shall be provided on the panel.

7.3 **Name Plates**

7.3.1 The switchboard shall have large name plate on the top indicating its Name, Designation and Code No.

7.3.2 Each feeder shall be provided with name plate. Each single front panel shall have name plate indicating panel number both in front and back.

7.3.3 All control switches, push buttons, lamps etc. shall have functional identification labels.

7.3.4 Name plate shall be of black Perspex with white engraving and of minimum 3mm thick.

7.4 Any other accessories required, but not specified, shall also be supplied to make the switchboard complete in all respects and ensure safe and proper operation.

All rights reserved

8.0 PAINTING

8.1 The enclosure, after degreasing, pickling in acid, cold rinsing, phosphatising, passivating etc. shall be painted with two coats of anti-rust paint followed by two coats of anticorrosive paint.

8.2 Epoxy based paint shall be used.

8.3 All paints shall be carefully selected to withstand tropical heat and extremes of weather. The paint shall not scale off, crinkle or be removed by abrasion due to normal handling.

8.4 The finishing shade shall be RAL 7035.

8.5 One litre of paint shall be supplied along with each board for touch up at site.

9.0 TESTS AND INSPECTION

9.1 All the switchboards shall be subjected to routine test as per IS: 8623 and their components as per relevant standards.

9.2 Additional tests, wherever specified, shall be carried out.

9.3 All the above tests shall be carried out in presence of Purchaser's representative. In addition, the equipment shall be subjected to stage inspection during process of manufacture at works and site inspection.

9.4 These inspections shall however, not absolve the vendor from their responsibility for making good any defect which may be noticed subsequently.

10.0 DRAWINGS AND DOCUMENTS

10.1 Drawings and documents as per Annexure-I shall be supplied, unless otherwise specified.

10.2 All drawings and documents shall have the following description written boldly:

-- Name of Client
-- Name of Consultant
-- Enquiry / Order Number with Project / Plant Name
-- Code No. & Description

11.0 SPARES

11.1 Spares for operation and maintenance

Item wise unit prices of spare parts with recommended quantity shall be quoted along with the main equipment.

11.2 Commissioning Spares

Commissioning spares, as required, shall be supplied with the main equipment. Item wise list of recommended commissioning spares shall be furnished for approval.

11.3 Any other spare parts not specified, but required, shall also be quoted along with the offer.

All rights reserved

11.4 All spare parts shall be identical to the parts used in the switch boards.

12.0 PACKING

12.1 The board shall be properly packed before despatch to avoid damage during transport, storage and handling.

12.2 The packing box shall contain a copy of the installation, operation and maintenance manual.

12.3 A sign to indicate the upright position of the panels to be placed during transport and storage shall be clearly marked. Also proper arrangement shall be provided to handle the equipment.

13.0 DEVIATIONS

13.1 Deviations, if any, from this standard shall be clearly indicated in the offer with reasoning.

All rights reserved

ANNEXURE - I

DOCUMENTATION FOR MEDIUM VOLTAGE SWITCHBOARDS

Sl.No.	Documentation Description	Documents Required (Y / N)		
		With Bid	For Approval	Final
1.	Specification Sheets, duly completed	Y	Y	Y
2.	Technical Particulars, duly filled in	Y	Y	Y
3.	Feeder Details	Y	Y	Y
4.	General arrangement and Foundation Drgs.	N	Y	Y
5.	Schematic and Wiring Diagrams	N	Y	Y
6.	Calculation for Bus-bar sizing	Y	Y	N
7.	Terminal Arrangement Drgs.	N	Y	Y
8.	Illustrative and Descriptive Literature	Y	N	Y
9.	Catalogues for bought out accessories.	Y	N	Y
10.	Installation, Operation and maintenance manual.	N	N	Y
11.	Test Certificates			
	i) Type -- Switchboard	Y	N	N
	-- Circuit Breaker	Y	N	N
	-- MCCB's	Y	N	N
	ii) Routine	N	N	Y
12.	Guarantee Certificates	N	N	Y
13.	Spare Parts List	Y	N	Y

Note:

1. 4 hard copies & 1 soft copy shall be supplied with bid.
2. 4 hard copies & 1 soft copy shall be supplied for approval after order within 4 weeks from the date of LOI.
3. 8 hard copies & 2 soft copies in pen drive shall be submitted as final documents prior to despatch of the equipment. These shall be made in sets and supplied in fine plastic coated folder.

Y - Yes, N - No

All rights reserved

TECHNICAL SPECIFICATION

SHEET STEEL DISTRIBUTION BOARDS

All rights reserved

CONTENTS

All rights reserved

1.0 SCOPE

1.1 This standard covers the technical requirements of design, manufacture, testing at works and delivery in well-packed condition of Sheet Steel Distribution Boards.

1.2 This standard shall be read in conjunction with relevant Specification Sheets and Feeder details.

2.0 STANDARDS TO BE FOLLOWED

2.1 The design, manufacture and testing of the equipment shall comply with the latest issue of the following Indian Standards, unless otherwise specified. Equipment complying with equivalent IEC standards shall also be acceptable.

IS: 8623	-	Specification for low voltage switchgear and control gear assemblies.
IS: 13947	-	Specification for Low-voltage Switchgear and Control gear
IS: 5578	-	Guide for marking of insulated conductors.
IS: 11353	-	Guide for uniform system of marking and identification of conductors and apparatus terminals.
IS: 10118	-	Code of practice for selection, installation and maintenance of switchgear and control gear.

Various components housed in the distribution board shall conform to the Indian Standard Specification as mentioned against the component details.

2.2 The design and operational features of the equipment offered shall also comply with the provisions of the latest issue of the Indian Electricity Rules and other Statutory Acts and Regulations. The supplier shall, wherever necessary, make suitable modifications in the equipment to comply with the above.

2.3 Wherever any requirement, laid down in this standard, differs from that in Indian Standard Specification the requirement specified herein shall prevail.

3.0 SERVICE CONDITIONS

3.1 Ambient Conditions

These shall be as indicated in Design Specification-Electrical.

3.2 System Details

These shall be as indicated in Design Specification-Electrical.

4.0 OPERATING REQUIREMENTS

The distribution board shall be suitable for operating at the specified rating continuously with the specified voltage and frequency variations under the ambient conditions indicated in Design Philosophy-Electrical, without exceeding the permissible temperature rise and without any detrimental effect on any part.

All rights reserved

5.0 DESIGN AND CONSTRUCTIONAL FEATURES

5.1 General

5.1.1 The distribution board shall consist of an assembly of a series of floor mounting, identical, metal clad, dead front type panels of unitized design. The panels shall be placed side by side to form a compact assembly and shall be extensible on either side.

5.1.2 The complete assembly shall be dust, damp and vermin proof having minimum degree of protection equivalent to IP-52 as per IS: 13947.

5.1.3 The frame work of the cubicles shall be of bolted/welded construction. The minimum thickness of steel shall be 2 mm for load bearing members, 1.6 mm for non-load bearing members and 3 mm for base channel. The doors and covers shall be fabricated from cold rolled sheet steel. Suitable reinforcement, wherever necessary, shall be provided.

5.1.4 The door hinges shall be concealed type.

5.1.5 All external hardware shall be zinc passivated. The hardware for fixing the removable parts shall be provided with retaining devices.

5.1.6 The doors and the removable covers shall be provided with non-deteriorating neoprene gaskets. Gaskets without any discontinuity shall be preferred. Gaskets shall be held in position in groove of shaped sheet steel work or these shall be of U type. Adhesive cement, if used, shall be of good quality so that the gaskets do not come off during service.

5.1.7 All the components shall be accessible for inspection and maintenance without the necessity for removal of the adjacent ones. In case of single front design all components shall be accessible from the front for maintenance and back opening doors/ openable covers for maintenance shall not be acceptable.

5.1.8 The layout of the components inside a module shall be liberal to facilitate maintenance and the interconnection of wiring between the components shall not be subjected to any undue stress at the bends.

5.1.9 Mounting height of components requiring operation and observation shall not be lower than 300 mm and higher than 1800 mm.

5.1.10 Inter panel barriers shall be provided.

5.1.11 Adequate arrangement for earthing shall be provided to safeguard the operator or other personnel from electric hazards under all conditions of operation.

5.2 Panel Arrangement

5.2.1 The distribution board shall be drawout / non-drawout type in single front/double front configuration.

5.2.2 Each Panel shall have its horizontal bus-bar chamber running on the top with multi-tier module units in the centre and having vertical bus-bar chamber and cable alley on either side.

5.2.3 The modules shall be enclosed on all sides and shall be so arranged that larger ones are placed at the bottom portion of the panel. Fixed type modules shall be at least 300 mm from the base channel.

5.2.4 The number of modules in the panel shall not exceed six for motor starter feeders and eight for switch fuse/MCB/MCCB feeders. The minimum size of module shall be 300 mm and 200 mm for starter and switch fuse feeders. The incomer and bus coupler module sizes for ratings up to 400 A shall be half the panel size. For higher ratings they shall be housed in single panel.

All rights reserved

5.2.5 The module door shall be so interlocked that it shall not be possible to open the door with switch in closed position. Defeat interlock facility shall be provided.

5.2.6 The relay, meters, switches and lamps shall be flush mounted. All components of one module shall be mounted on the same module on a rigid sheet steel chassis. A 20 mm dia. rotating knob on the door shall be provided for closing and opening.

5.3 **Bus Bars and Connections**

5.3.1 The bus-bar shall be suitable for the supply system specified in the Specification Sheet. The bus-bar and connections shall be made of electrolytic copper or high conductivity aluminium alloy conforming to Grade E91E of IS: 5082.

5.3.2 The bus-bar shall be amply sized to carry the rated continuous current under the specified ambient temperature without exceeding the temperature of 90ºC. The bus-bars shall also be designed to withstand the system fault current for 1 second without exceeding the temperature of 200ºC for bare aluminium and 250ºC for bare copper. The minimum acceptable size of bus-bars shall be 250 sq. mm (Al). Calculation for the bus-bar sizing shall be furnished along with the offer.

5.3.3 In case of double front arrangement of distribution boards, different sets of vertical bus-bars shall be provided. The vertical bus-bars shall be PVC sleeved or shrouded by insulating barriers which shall have cut-outs to permit entry of power wires. It shall be possible to remove the shroud for inspection and maintenance. Neutral-bars shall be provided in this chamber.

5.3.4 Horizontal bus-bars shall be of same cross-section through out. Stepped bus-bars shall not be acceptable.

5.3.5 All bus-bars shall be arranged and colours coded according to IS: 5578/11353.

5.3.6 The horizontal bus-bar shall run in a separate bus chamber located at the top shall have separate screwed cover for inspection purpose.

5.3.7 The bus-bars shall be rigidly supported at equal intervals to withstand maximum short circuit stresses. The supports shall be of moulded construction with built in anti tracking barriers. The support material shall be of fibre glass reinforced thermosetting plastic.

5.3.8 All joints shall be suitably treated to avoid oxidation of contact surfaces and bimetallic corrosion. A minimum of two bolts with spring washers shall be used for horizontal bus-bar joints.

5.3.9 Horizontal bus bars shall be insulated with heat shrinkable PVC sleeves of reputed makes. Insulating shrouds shall be provided for all joints of insulated bus-bars.

5.4 **Clearance and Creepage Distances**

5.4.1 The clearance and creepage distances shall not be lower than the values specified below :

i)	Minimum clearance between two live conductors	--	20 mm
ii)	Minimum clearance between live part and accidentally dangerous part	--	20 mm
iii)	Minimum creepage distance	--	28 mm

5.4.2 The clearances and the creepage, as specified above, shall definitely be maintained in the bus-bar system. Provision of bus-bar insulations, separator or barriers shall not be considered to reduce the clearance from the values specified above.

All rights reserved

5.4.3 At the termination points in the equipment, e.g. switches, contactors, thermal relays, etc. it is realized that above clearance shall not always be possible to be maintained. All such points where above clearance are not possible to be maintained shall, therefore, be insulated or taped.

5.5 **Insulation**

5.5.1 The insulation used shall be non-hygroscopic and shall be of porcelain, Epoxy- resins or fibre glass moulded with plastic. It shall be of adequate electrical and mechanical strength to give trouble free service during normal operation and short circuit conditions.

5.5.2 The insulation shall be treated suitably to withstand the tropical conditions and atmospheric pollution.

5.6 **Power Wiring**

5.6.1 The connections from bus-bar including neutral to individual units on the modules shall consist of PVC insulated flexible copper cable or tapped copper strip.

5.6.2 The power wiring size shall be decided based on the rating of the switch, after using a rating factor of not more than 50% over the current rating in free air. In any case the minimum size of power wiring shall not be less than 4 sq. mm copper.

5.6.3 The size of connection from incomer to horizontal bus-bar and from horizontal bus-bar to bus coupler shall not be less than the size adopted for horizontal bus-bar.

5.7 **Control Wiring**

5.7.1 The switch board shall be completely factory wired and ready for external connections.

5.7.2 The wiring shall be carried out with flexible stranded PVC insulated copper conductor cables of 1100 Volt grade. The size of wires shall be as follows:

C.T. Circuit -- 2.5 sq. mm

V.T. and Control Circuits -- 1.5 sq. mm

5.7.3 All wiring shall be provided with dependent both end marking as per IS: 5578. Numbered ferrules, reading from the terminals outwards, shall be provided at both ends of all wiring for easy identification. These shall be interlocking type plastic ferrules.

5.7.4 Control wiring circuits, fed from a supply common to a number of feeders, shall be so protected that failure of a circuit in one feeder does not affect the operation of the other feeders.

5.7.5 The wiring to the equipment mounted on the doors shall be carried out with flexible multi strand copper conductor cable and supported so that opening of the door, there is no undue strain on wire leads.

5.7.6 The control cables shall be neatly arranged and properly supported.

5.8 **External Cable Termination**

5.8.1 All power and control cables shall enter the distribution board from the bottom. Sufficient space shall be provided for ease of connection and termination of cables.

5.8.2 All cables shall be of 1.1 KV grade PVC insulated armoured and PVC sheathed except for single core cable which shall be unarmoured. The number and sizes of cable shall be as indicated in Feeder details.

All rights reserved

5.8.3 Compression type cable glands along with the cable lugs as required shall be provided for termination of cables.

5.8.4 The cable glands shall be of rolled Aluminium or Nickel plated brass heavy duty double compression type and shall be mounted on a removable gland plate, provided at a minimum height of 75 mm from the bottom of the distribution board. Two numbers spare knockouts of size 20 mm shall also be provided on the gland plates for future use.

5.8.5 For all power cables crimped type aluminium lugs for aluminium cables and tinned copper lugs for copper cables shall be provided.

5.8.6 The terminal blocks shall be pressure clamp type up to 35 sq. mm cable and bolted lug type for higher sizes of cables. These shall be protected type and rated for 1100 Volts service. The minimum current rating of terminal block shall be 16 Amp. The construction shall be such that after the connection of cables by means of lugs, necessary clearance and creepage distance are available.

5.8.7 Where more than two cables in parallel are required to be terminated, a system of bus links shall be provided with adequate clearance and spacing.

5.8.8 Suitable clamps to support the vertical run of cables shall be provided.

5.8.9 The terminal block shall be grouped according to circuit functions and suitably numbered. 20% extra terminals shall be provided in the terminal block.

5.8.10 For power connections, suitable marking on the terminals shall be provided to identify the phases.

5.9 **Feeder Details**

5.9.1 The requirements of incomer, bus coupler and outgoing feeders shall be as indicated in the single line diagram, feeder details and corresponding schematic diagram.

5.9.2 The bus coupler shall be so located that it is possible to maintain half of the bus-bars while the other half is still alive. Complete segregation of bus-bar connections to bus coupler shall be provided.

5.9.3 Castle key type mechanical interlocks shall be provided between incomers and bus section modules to avoid paralleling of incomers. In addition padlocking facilities shall be provided in OFF position.

5.9.4 Single phase loads shall be distributed as far as possible on all the three phases.

6.0 COMPONENT DETAILS

6.1 The make of the components shall be as specified elsewhere in the NIT and shall conform to type of co-ordination C as per IS: 13947.

6.2 **Moulded Case Circuit Breakers**

6.2.1 The circuit breaker shall conform to IS: 13947 (Part 2) and shall be of P2 category having rupturing capacity as specified in Specification Sheet.

6.2.2 The circuit breaker shall be provided with spring assisted quick make quick break type manually operated trip free mechanism, mechanical ON/OFF position indicators, thermal tripping devices of inverse characteristics, instantaneous short circuit tripping devices and necessary auxiliary and alarm switches. The MCCB cubicle shall be provided with service, test and isolated position and automatic safety shutter.

6.2.3 The thermal and short circuit tripping device shall be adjustable type.

All rights reserved

6.2.4 When used for motor circuit shunt trip devices shall be provided and the let through power of controlling MCCB shall be lower than the respective contactor.

6.2.5 In addition, under voltage trip shall be provided, if specified.

6.3 **Switches**

6.3.1 The switches shall be Motor duty type AC23 category and shall comply with the requirements laid down in IS: 13947 (Part 3). Switches up to 63 Amps shall be rotary type and those of 100 Amp and above shall be link type.

6.3.2 'ON' and 'OFF' positions of the switches shall be indicated on the panel. Provision shall be made to lock the switch in the 'OFF' position.

6.3.3 The fixed contacts shall be shrouded and the contacts shall be silver plated.

6.3.4 Two Pole switches shall also isolate the neutral circuit along with phase circuit.
4 Pole / 2 Pole switches shall be used for 3 Phase/1 Phase circuits respectively.

6.4 **Fuses**

The fuses shall be of non-deteriorating HRC cartridge link type and conform to IS: 13703. They shall be suitable for the load and the service required in the circuit.

6.5 **Air Break Contactors**

6.5.1 The Air Break Contactor shall be of AC3 category unless otherwise specified, conforming to IS: 13947 (Part-4) and flapper type. Gravity operated contactors are not acceptable.

6.5.2 The dropout voltage shall not exceed 65% of rated voltage.

6.5.3 Each contactor shall be provided with auxiliary contacts as required. The rating of the auxiliary contacts shall be 5 Amps. AC or 1 Amp DC at the specified control voltages. The spare auxiliary contacts shall also be wired terminal block.

6.6 **Bimetal Thermal Overload Relays**

6.6.1 The contactor shall be provided with three pole bimetal thermal overload relays unless otherwise specified. The bimetal relays shall be of suitable range, ambient temperature compensated and shall be separate mounting type. They shall be adjustable through graduated scale and shall be provided with changeover contact.

6.6.2 Bimetal relays shall conform to IS: 3231 and shall have built in single phasing preventor.

6.6.3 The bimetal relays shall be provided with a manual reset device resetable after opening the cubicle door. Auto reset thermal relays are not acceptable.

6.7 **Current Transformers**

6.7.1 The current transformers shall conform to IS: 2705.

6.7.2 Current Transformers shall be Class-F insulated and vacuum impregnated. The Current Transformers shall be rigidly mounted and shall be easily accessible for maintenance and testing.

6.7.3 The Current Transformers shall be of 7.5 VA output. The output shall be adequate for the instrument and metering duties involved with sufficient margin. The Current Transformers shall have the accuracy Class-1 for the metering duty.

All rights reserved

6.7.4 All the Current Transformers shall be provided with terminals and shorting links. One of the terminals of C.T. shall be earthed. The polarity of the C.T. shall be clearly marked.

6.7.5 The C.T.s shall be capable of withstanding momentary open-circuit on the secondary side without injurious effects.

6.8 **Instruments and Meters**

6.8.1 All instruments shall be flush mounting type with square face and shall be tropicalized and dust tight.

6.8.2 The size of the instruments shall be 96 mm x 96 mm for full and half size modules and 72 mm x 72 mm for lower size modules.

6.8.3 Dials shall be parallax free with scale marked in black on white background and shall be suitable for direct reading.

6.8.4 Zero adjusters shall be provided for operation from the front of the cases.

6.8.5 All ammeters and voltmeters shall have 0 - 240º scale moving iron spring controlled type and of Class 1.5 accuracy as per IS: 1248. The scale range of the ammeter and voltmeter shall be as indicated in the feeder details.

6.8.6 In case of motor feeders, the ammeter shall be graduated uniformly upto C.T. primary current and with a compressed end scale upto 6 times the C.T. primary current. Red pointer shall be provided, which can be adjusted at site for indicating full load current.

6.8.7 KWH meter shall be 3 phase 4 wire type. These shall conform to the requirements of relevant IS and shall be C.T. operated. The current coil shall be rated for 5 Amp.

6.8.8 All kWh meters shall be provided with test blocks for current and voltage coils for testing them at site without interrupting their recording while in service.

6.9 **Push Button and Control Switches**

6.9.1 The switches and push buttons shall conform to utilization category AC 11/DC 11 as per IS: 13947 (Part-5). The contact shall be rated to make, break and carry inductive current of 5 Amp. at 415 V AC and 1 Amp at 220 V DC.

6.9.2 The control switches shall be spring return rotary type unless otherwise specified and provided with pistol grip type handle. The control switches for circuit breakers shall be additionally fitted with lost motion devices and sequencing devices.

6.9.3 The selector switches shall be stay-put rotary type and provided with oval shape handles.

6.9.4 The push buttons shall be of momentary contact spring loaded type with a set of normally close and open contacts. The push button for 'Start' shall be shrouded type and coloured green, stop push button shall be un-shrouded type and coloured red and other push buttons shall be un-shrouded type coloured black. The fixing ring shall be metallic white.

6.9.5 Emergency stop push buttons, if specified, shall be lockable in pushed position.

6.10 **Miniature Circuit Breakers**

6.10.1 The miniature circuit breakers shall conform to IS: 13032 and shall be of duty category M-9.

6.10.2 It shall be provided with overload and short circuit protective devices in a heat resistant housing.

All rights reserved

6.10.3 A certificate of short circuit rating and current time tripping curve shall be furnished alongwith the offer.

6.11 **Signal Lamps**

6.11.1 Signal lamps shall be provided to indicate the various circuit conditions as shown in scheme drawings. The colour of the lamps for various functions shall be as follows:

Red -- Switch/Contactor closed.
Green -- Switch/Contactor open.

6.11.2 The lamps shall be LED type having lumen output 200 milli candela in axial direction.

6.11.3 It shall be possible to remove the globe from outside for replacement of lamps.

7.0 ACCESSORIES

7.1 The supplier shall include the following accessories.

-- Fuse Puller.
-- Test plug for kWh meters.

7.2 **Space Heater**

Each vertical section shall be provided with a thermostatically controlled space heater, rated for 240 V, 50 Hz and controlled through double pole miniature circuit breaker.

7.3 **Name Plates**

7.3.1 The distribution board shall have large name plate on the top to indicate its name and designation.

7.3.2 Each feeder shall be provided with name plate. Each single front panel shall have name plate both in front and back.

7.3.3 All control switches, push buttons, lamps etc. shall have functional identification labels.

7.3.4 Name plate shall be of black perspex with white engraving and of minimum 3 mm thick.

7.3.5 Any other accessories required, but not specified shall also be supplied to make the distribution board complete in all respects to ensure safe and proper operation.

8.0 PAINTING

8.1 The enclosure after degreasing, pickling in acid, cold rinsing phosphatising, passivating etc. shall be painted with two coats of anti-rust paint followed by two coats of anticorrosive paint.

8.2 Epoxy based paint shall be used.

8.3 All paints shall be carefully selected to withstand tropical heat and extremes of weather. The paint shall not scale off, crinkle or be removed by abrasion due to normal handling.

8.4 Unless otherwise specified, the finishing shade shall be light grey Shade No.631 as per IS: 5.

8.5 One litre of paint shall be supplied along with each board for touch up at site.

All rights reserved

9.0 TESTS AND INSPECTION

9.1 The distribution boards shall be subjected to routine test as per IS: 8623.

9.2 Additional tests, wherever specified, shall be carried out.

9.3 All the above tests shall be carried out in presence of purchaser's representative. In addition, the equipment shall be subjected to stage inspection during process of manufacture at works and site inspection.

9.4 These inspections shall however, not absolve the vendor from his responsibility for making good any defect which shall be noticed subsequently.

10.0 DRAWINGS AND DOCUMENTS

10.1 Drawings and documents as per Annexure-I shall be supplied unless otherwise specified.

10.2 All drawings and documents shall have the following description written boldly:

- Name of client
- Name of consultant
- Enquiry / Order Number with plant / project name
- Code No. and Description

11.0 SPARES

11.1 Spares for operation and maintenance

Item wise unit prices of spare parts with recommended quantity shall be quoted along with the equipments.

11.2 Commissioning Spares

Commissioning spares, as required, shall be supplied with the main equipment. Item wise list of recommended commissioning spares shall be furnished for approval.

11.3 Any other spare parts not specified, but required, shall also be quoted along with the offer.

11.4 All spare parts shall be identical to the parts used in the equipments.

12.0 PACKING

12.1 The distribution board shall be properly packed before despatch to avoid damage during transport, storage and handling.

12.2 The packing box shall contain a copy of the installation, operation and maintenance manual.

12.3 A sign to indicate the upright position of the panels to be placed during transport and storage shall be clearly marked. Also proper arrangement shall be provided to handle the equipment.

All rights reserved

13.0 DEVIATIONS

13.1 Deviations, if any, from this standard shall be clearly indicated in the offer with reasoning.

All rights reserved

ANNEXURE - I

DOCUMENTATION FOR SHEET STEEL DISTRIBUTION BOARDS

Sl.No.	Documents	Documents Required (Y / N)		
		With Bid	For Approval	Final
1.	Specification Sheet, duly completed	Y	Y	Y
2.	Technical Particulars, duly filled-in	Y	Y	Y
3.	Feeder Details	Y	Y	Y
4.	General Arrangement and Foundation Drawings	Y	Y	Y
5.	Schematic Diagrams with Terminal arrangement drawings	N	Y	Y
6.	Calculation for Bus-bar sizing	Y	Y	N
7.	Illustrative and Descriptive literature	Y	N	Y
8.	Catalogues for bought out accessories	Y	N	Y
9.	Installation, Operation and Maintenance Manual	N	N	Y
10.	Test Certificates			
	-- Type (for MCCB & MCB)	Y	N	N
	-- Routine	N	N	Y
11.	Guarantee Certificates	N	N	Y
12.	Spare Parts List	Y	N	Y

Note:

1. 4 hard copies & 1 soft copy shall be supplied with bid.
2. 4 hard copies & 1 soft copy shall be supplied for approval after order within 4 weeks from the date of LOI.
3. 8 hard copies & 2 soft copies in pen drive shall be submitted as final documents prior to despatch of the equipment. These shall be made in sets and supplied in fine plastic coated folder.

Y - Yes, N - No

All rights reserved

TECHNICAL SPECIFICATION

LIGHTING SUB DISTRIBUTION BOARDS

All rights reserved

CONTENTS

LIST OF ATTACHMENTS

All rights reserved

1.0 SCOPE

1.1 This standard covers the technical requirements of design, manufacture, testing at works and delivery in well packed condition of lighting sub distribution boards.

2.0 STANDARDS TO BE FOLLOWED

2.1 The design, manufacture and testing of the equipment covered by this standard shall comply with the latest issue of the following Indian Standards. Equipment complying with equivalent IEC standards shall also be acceptable

IS: 13947 - Low voltage switchgear and control gear

IS: 8623 - Specification for low voltage switchgear and control gear assemblies

2.2 The design and operational features of the equipment offered shall also comply with the provisions of latest issue of the Indian Electricity Rules and other relevant statutory acts and regulations. The supplier shall, wherever necessary, make suitable modification in the equipment to comply with the above.

2.3 Wherever any requirement, laid down in this standard, differs from that in Indian Standard Specifications, the requirement specified herein shall prevail.

3.0 SERVICE CONDITIONS

3.1 **Ambient Conditions**

These shall be as indicated in Design Specification-Electrical.

3.2 **System Details**

These shall be as indicated in Design Specification-Electrical.

4.0 OPERATING REQUIREMENTS

The lighting sub-distribution boards shall be suitable for operating continuously under the ambient conditions and with the voltage and frequency variations indicated in Design Philosophy-Electrical, without exceeding the specified temperature rise and without any detrimental effect on any part.

5.0 GENERAL DESIGN AND CONSTRUCTIONAL FEATURES

5.1 The lighting sub distribution boards shall be fabricated out of 2.5 mm thick cold rolled sheet steel and shall be suitable for mounting on wall/structure. These shall have dust and vermin proof construction conforming to IP-54 as per IS: 13947. For outdoor installation, the enclosure shall conform to IPW-55, suitable canopy made out of 2 mm thick Aluminium sheet shall be supplied along with the board.

5.2 The miniature circuit breakers shall be so mounted inside the enclosure that their operating knobs project outside for easy operation. The cut-out for the knobs on the enclosure shall be lined with gasket for dust proofness. For further protection against ingress of dust, the portion where the knobs have protruded out, shall be provided with another external front cover, internally hinged at the top, gravity operated and with a knurled knob at the bottom. The external cover shall be flushed with the main cover.

All rights reserved

Continuous neoprene gasket shall be provided to make the board completely dust and weather proof.

5.3 All external hard ware of diameter less than 8 mm shall be of stainless steel and those of diameter 8 mm and above shall be of mild steel zinc passivated.

5.4 The sub-distribution boards to be located indoors shall have top entry arrangement for outgoing cables and bottom entry for incoming cable. However for outdoor locations, all cable entries shall be from the bottom only.

5.5 Three phase and neutral bus bar system of adequate size shall be provided to which all outgoing and incoming MCB's shall be connected.

5.6 The internal wiring shall be carried out by means of single core PVC insulated 2.5 sq. mm stranded copper conductor cables.

5.7 Two earthing terminals outside the board shall be provided.

5.8 Suitable label inscription consisting of black perspex with engraving for the board and circuit nos. of all outgoing feeders shall be provided. The label inscription of the board shall contain description and code no.. The circuit nos. of outgoing feeders shall be serially indicated as 1L, 2L.....17L, 18L.

5.9 The board shall be complete with terminal block, cable glands, cable lugs and other accessories as specified.

6.0 SPECIAL FEATURES FOR FLAME PROOF LIGHTING SUB DISTRIBUTION BOARDS

6.1 The enclosure shall be in addition of flame proof execution as per IS: 2148.

6.2 The enclosure group and temperature class shall be as indicated in specification sheet.

6.3 The enclosure shall be of cast iron/cast Aluminium alloy (4600 as per IS: 617).

6.4 Cables shall enter the terminal chamber through flame proof compression type cable glands. From terminal chamber to the main enclosure connection shall be made through bushings. Direct entry of external cables into the main enclosure shall not be accepted.

6.5 The sub-distribution board shall be of 6 way type.

6.6 Individual earth terminals shall be provided for the earth conductor of the outgoing cables beside the phase and neutral terminals.

6.7 The sub-distribution board must be certified by Central Mining Research Institute, Dhanbad or other statutory authority for use in specified hazardous area.

7.0 COMPONENT DETAILS

7.1 The lighting sub-distribution board shall be wired and have components as per SD-8083 (copy attached).

All rights reserved

7.2 **Miniature Circuit Breaker (MCB)**

7.2.1 The MCB shall be of duty category M-9 and shall conform to IS-8828. It shall be provided with overload and short circuit protective devices.

7.2.2 The incoming MCB's or switches shall be of triple pole and switched neutral type and outgoing MCB's of single pole and switched neutral type, single phase earth leakage protection in each phase of the incomer shall be provided.

7.3 **Terminal Block**

Pressure clamp type terminal blocks shall be provided both for incoming and outgoing cables. The rating of the terminal block shall be at least 1.5 times the rating of the MCB.

7.4 **Cable Glands**

Heavy duty double compression type Aluminium cable glands suitable for XLPE insulated, armoured and PVC sheathed 1.1 KV grade incoming and outgoing cables shall be provided.

8.0 PAINTING

8.1 The enclosure after suitable pre-treatment shall be painted with two coats of anti rust paint followed by two coats or anticorrosive paint.

8.2 Epoxy based paint shall be used.

8.3 All paints shall be carefully selected to withstand tropical heat and extremes of weather. The paint shall not scale off, crinkle or be removed by abrasion due to normal handling.

8.4 The finishing shade shall be light grey shade no.631 as per IS: 5.

9.0 TESTS AND INSPECTION

9.1 All the lighting sub-distribution boards shall be subjected to routine tests as per IS: 8623.

9.2 Additional tests, wherever specified, shall be carried out on one lighting sub-distribution board of each type.

9.3 The above mentioned tests shall be carried out in the manufacturer's works in the presence of purchaser's representative. In addition, the equipment shall be subjected to stage inspection at works and inspection at site for final acceptance.

9.4 The purchaser's inspection shall, however, not absolve the vendor from his responsibility for making good any defects which may be noticed subsequently.

10.0 DRAWINGS AND DOCUMENTS

10.1 Drawings and documents as per Annexure-I shall be supplied, unless otherwise specified.

10.2 All drawings and documents shall have the following description written boldly.

- Name of client
- Name of consultant

All rights reserved

- Enquiry / Order Number with plant / project name
- Code No. and Description

11.0 SPARES

11.1 Spares for operation and maintenance

Item wise unit prices of spare parts with recommended quantity shall be quoted along with the equipments.

11.2 Commissioning Spares

Commissioning spares, as required, shall be supplied with the main equipment. Item wise list of recommended commissioning spares shall be furnished for approval.

11.3 Any other spare parts not specified, but required, shall also be quoted along with the offer.

11.4 All spare parts shall be identical to the parts used in the equipment.

12.0 PACKING

12.1 The equipment shall be properly packed to safeguard against weather conditions and handling during transit. It shall be wrapped in polythene bags and an additional wrapping of bitumen paper shall also be provided to make it completely water proof before the equipment is packed in wooden crates.

12.2 The packing box shall contain a copy of the installation, operation and maintenance manual.

13.0 DEVIATIONS

13.1 Deviations, if any, from this standard shall be clearly indicated in the offer with reasoning.

All rights reserved

ANNEXURE - I

DOCUMENTATION FOR LIGHTING SUB DISTRIBUTION BOARDS

SL. NO.	Description	Documents Required (Y / N)		
		With Bid	For Approval	Final
1.	Specification Sheet, duly completed	Y	Y	Y
2.	Technical particulars, duly filled-in	Y	Y	Y
3.	General arrangement Drgs.	Y	Y	Y
4.	Certificate for flameproofness from statutory testing authority wherever applicable	Y	N	Y
5.	Schematic diagram	N	Y	Y
6.	Descriptive literature of Various equipment	Y	N	Y
7.	Guarantee certificate	N	N	Y
8.	Test certificate	N	N	Y

Note:

1. 4 hard copies & 1 soft copy shall be supplied with bid.
2. 4 hard copies & 1 soft copy shall be supplied for approval after order within 4 weeks from the date of LOI.
3. 8 hard copies & 2 soft copies in pen drive shall be submitted as final documents prior to despatch of the equipment. These shall be made in sets and supplied in fine plastic coated folder.

Y - Yes, N - No

All rights reserved

पी डी आई एल PDIL	TYPICAL WIRING DIAGRAM FOR LIGHTING SUB-DISTRIBUTION BOARDS	SD : 8083	0
		DOCUMENT NO.	REV
		SHEET 1 OF 1	

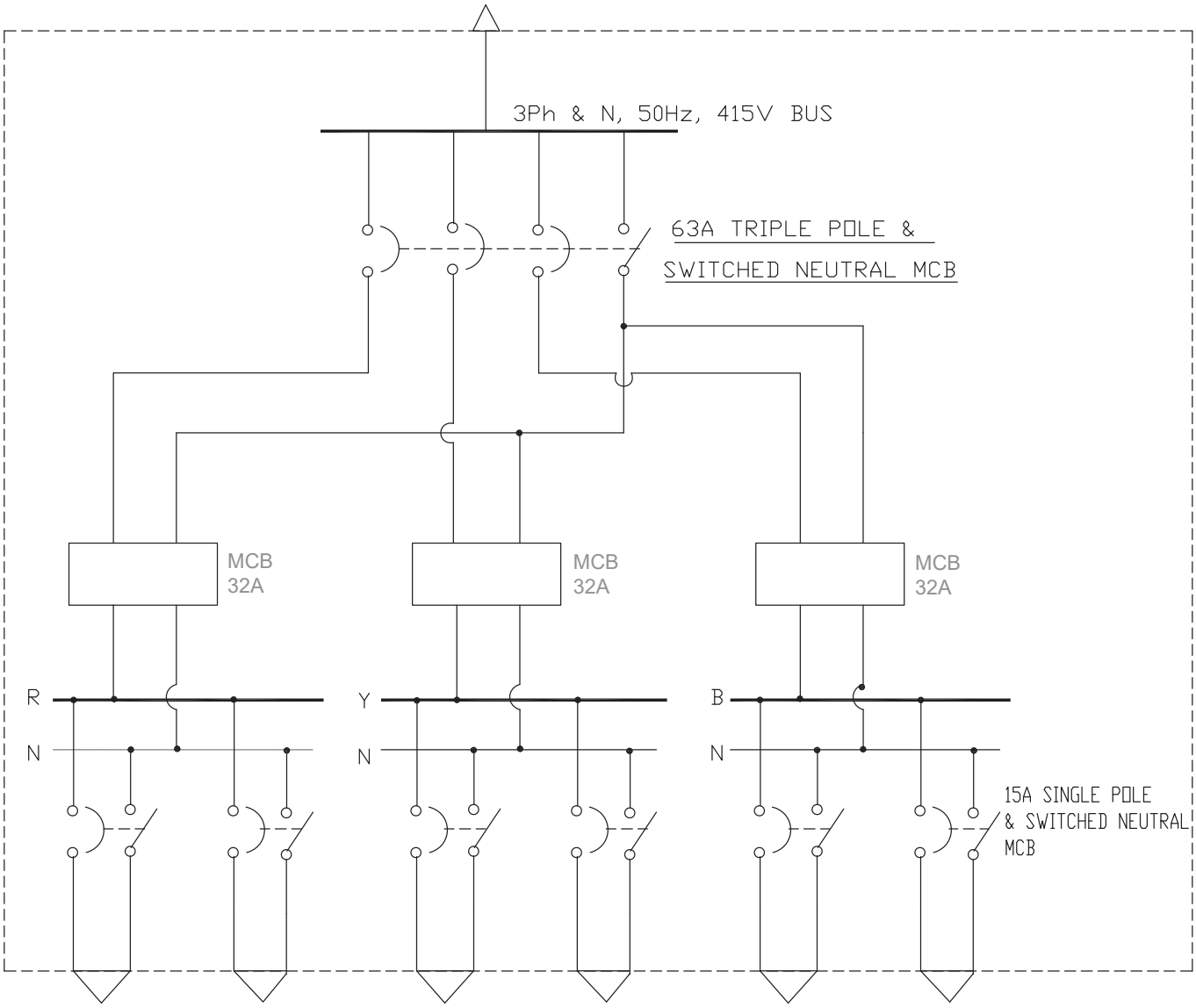

SL. NO.	LIGHTING SUB-DIST. BOARD TYPE	NOS. OF OUTGOING FEEDERS
1.	A	6
2.	B	9
3.	C	12
4.	D	15
5.	E	18

TECHNICAL SPECIFICATION

INDUCTION MOTOR

All rights reserved

CONTENTS

All rights reserved

1.0 SCOPE

1.1 This standard covers the technical requirements of design, manufacture, testing at works and delivery in well-packed condition of medium voltage and high voltage induction motors.

2.0 STANDARDS TO BE FOLLOWED

2.1 The design, manufacture and testing of the equipment covered by this standard shall comply with the latest issue of IS-325 and other relevant Indian Standards, unless otherwise specified. Equipment complying with equivalent IEC standards shall also be acceptable.

2.2 The design and operational features of the equipment offered shall also comply with the provisions of latest issue of the Indian Electricity Rules and other relevant Statutory Rules & Regulations. The supplier shall, whenever necessary, make suitable modification in the equipment to comply with the above mentioned rules.

2.3 Flame proof motors shall, in addition, comply with the requirements laid down in IS: 2148.

2.4 Increased safety motors shall, in addition, comply with the requirements laid down in IS: 6381.

2.5 Motors with type of protection “n” shall, in addition, comply with the requirements laid down in IS: 9628.

2.6 Wherever any requirement laid down in this standard differs from that in Indian Standard Specifications, the requirement specified herein shall prevail.

3.0 SERVICE CONDITIONS

3.1 **Ambient Conditions**

The ambient conditions shall be as indicated in the Design Specification-Electrical.

3.2 **System Details**

3.2.1 The details of power system to which the motors will be connected shall be as indicated in the Design Specification-Electrical.

3.2.2 The motors shall be suitable for connection to a power system where transient disturbances are very likely to occur. During the transient disturbances, voltage of the system may completely disappear and return in a short time with the motors still running and connected. Under this condition, the return of voltage may occur at such an instant that the induced e.m.f. in the motor is in phase with the applied voltage giving rise to current surges which may reach a value equal to 1.6 times the starting current and also cause transient torques of large magnitudes.

4.0 GENERAL DESIGN FEATURES

4.1 **Enclosure**

4.1.1 The enclosure of motors for indoor and outdoor services shall be IPW-55 as per IS: 4691.

All rights reserved

4.1.2 Motors for outdoor service shall be provided with special seals for the enclosure, joints, bearing housing, terminal boxes etc. so that no extra protective covering for ingress of water shall be required.

4.1.3 Vertical motors for outdoor installation shall be provided with a rain protective hood.

4.1.4 All external hardwares shall be zinc passivated.

4.1.5 The enclosure shall be provided with threaded metallic plug to permit drainage of condensed water from the inside.

4.2 **Cooling**

4.2.1 All motors shall be totally enclosed fan cooled conforming to IC-0141 as per IS: 6362 unless otherwise specified.

4.2.2 In case of CACA construction, the same shall conform to IC-0161 as per IS: 6362.

4.2.3 In case of CACW construction, the same shall conform to ICW 37A 91 as per IS: 6362.

4.2.4 Wherever service conditions indicated in the specification sheet are such that corrosive agents are present in the surroundings, the following materials of construction for cooling tubes shall be adopted, unless otherwise specified.

For CACA motor - Aluminium tubes having minimum thickness of 1.6 mm

For CACW motor - Low carbon alloy steel

4.2.5 In case of CACW motors, the cooling tubes and flanges shall also be suitable for the cooling water analysis. Trays shall be provided for collection of leaking water with arrangement for its drainage.

4.2.6 The cooling fans shall be suitable for bidirectional rotation of motors. These shall be fastened to the motor shaft by means of compensating rings or will be balanced independent of the motor. Guide key or reference points shall be supplied to prevent wrong assembly. The cooling air shall be sucked from the non-driving end.

4.2.7 The cooling fans shall be made of non-sparking materials such as cast Aluminium (LM-6 alloy) / cast iron.

4.3 **Direction of Rotation**

4.3.1 Motors shall be suitable for both directions of rotation. In case of any design limitation, the same shall be indicated in the offer.

4.3.2 In either case, a plate showing the direction of rotation corresponding to the phase terminal markings shall be fitted at the driving end shield of the motors.

4.4 **Stator**

4.4.1 The stator laminations shall be made from suitable magnetic sheet iron varnished on both sides. Where ventilation is required, these shall be arranged in suitable packs, each pack being separated by spacers to form ventilating ducts for circulation of air.

All rights reserved

4.4.2 The slot shall be open type with coils so arranged that the coils can be easily removed for inspection and repair.

4.5 **Rotor**

4.5.1 The rotor shall be of squirrel cage construction, unless otherwise specified.

4.5.2 For small motors, the squirrel cage shall preferably be of pressure die-cast construction. For large motors, the rotor bars and the end rings shall be of copper or copper alloy. The bars shall be firmly placed in slots to prevent vibration during start up / locked rotor condition. Conductor ends shall be securely fixed to the end rings using the latest brazing techniques. Retaining rings shall be provided for high speed machines for the end rings. The rotor cage shall be designed for the required starting and duty cycles.

4.5.3 Wherever wound rotor is specified, the windings shall have the same features as detailed for the stator windings. The rotor voltage shall not exceed the stator voltage.

4.5.4 The rotor shall be dynamically balanced and shall rotate perfectly with no preferential stop points. The rotor shall be constructed such as to allow the removal or addition of material for balancing.

4.5.5 The rotor shaft shall be electrically and magnetically so balanced that the induced shaft voltage does not exceed 200 millivolt. Otherwise the bearing housing at non-driving end shall be insulated for 2 KV.

4.6 **Windings and Insulation**

4.6.1 The motor coils shall be made out of insulated electrolytic grade copper conductor. Successive coils shall be connected by accessible joints, well brazed and finished smooth to prevent damage to insulation.

4.6.2 The motors shall be insulated assuming the power system neutral as isolated.

4.6.3 All motors shall be insulated with class B or F insulation with tropical and fungicidal treatments.

4.6.4 Wherever class F insulation is specified, the windings shall be easily replaceable type and the temperature rise shall not exceed that of class B insulation.

4.6.5 The winding coils shall be dried, properly impregnated with suitable varnishes to withstand the site conditions and properly baked. At least two additional impregnations and baking shall be applied to the assembled stator coil, making a total of three impregnations and baking. Finally the windings shall be painted with special anti-acid and anti-alkali paints to withstand the site conditions.

4.6.6 The windings shall be well brazed and capable of withstanding thermally and mechanically the transient disturbances specified under clause 3.2.2.

4.6.7 Lead-in wire between the windings and the outside terminals shall be made through bushings in H.V. motors. For M.V. motors, heat resistant insulated conductors shall be used as lead-in wire.

4.6.8 The windings shall be star connected for high voltage motors and delta connected for medium voltage motors.

All rights reserved

4.7 **Slip Rings and Brushes**

4.7.1 Slip rings shall be located in the non-driving side. The material of construction shall be copper alloy. The slip rings and the brush gear shall be cooled by the motor cooling fan.

4.7.2 For explosion proof motors, the slip rings and brush gear shall be housed in a flameproof housing. In case this is not possible, the housing shall be pressurised type with flameproof pressure switch for interlocking with the motor. In either case, glass covers shall be provided for inspection.

4.7.3 The starting rheostats shall be designed for intermittent duty and rated for 10 minutes. Where speed regulation is required, the rheostats and the controllers shall be suitable for such duty and be continuously rated. Auxiliary contacts shall be provided on the controllers for connections to the motor supply controls to prevent wrong operations during starting.

4.8 **Bearings**

4.8.1 All motors shall be provided with bearings suitable for the application. The bearings must be guaranteed to ensure a smooth operation and a life not shorter than 30,000 hrs.

4.8.2 Where external thrusts are specified, the motors shall be fitted with special roller thrust bearings capable of withstanding the specified thrust. In such cases, the guaranteed life of the bearings shall not be less than 20,000 hours.

4.8.3 The bearing housing shall be effectively sealed against ingress of dust and water and creep age of lubricants along the shaft.

4.8.4 The bearing shall be suitable for both directions of rotation of the motor.

4.8.5 All motors shall be provided with on-line grease lubrication arrangement for both DE and NDE side bearings except for motors of frame size 112 and less and flange mounted M.V. motors. The arrangement shall be complete with grease nipple and drain plug located at convenient locations.

4.8.6 All oil lubricated bearings shall be fitted with oil level indicator and resistance temperature detector/dial type thermometer with alarm and trip contacts.

4.8.7 Self cooled bearing system shall be preferred.

4.8.8 The manufacturer shall specify the type of lubricant and the time interval of lubrication for the bearings of each motor.

4.8.9 The bearing temperature shall not exceed 90ºC for grease lubricated bearings and 70ºC for oil lubricated bearings.

4.8.10 Wherever shaft end-play has been specified, the bearings shall be capable of providing the specified end-play.

4.8.11 Bearings shall be of SKF/FAG make only. List of bearings shall be provided with supply of motor.

All rights reserved

4.9 **Terminal Box**

4.9.1 All the terminal boxes shall have identical degree of protection as that of the motor.

4.9.2 The power terminal box shall be mounted on the right hand side of the motor as viewed from the coupling end. Terminal box shall be rotatable through 360° in steps of 90°. The motor shall be symmetrical about its axis so that stator can be rotated through 180° to suit cable entry.

4.9.3 The power terminal boxes shall be as follows:

a) For H.V. motors - Phase segregated type capable of with standing the system fault level for 0.2 Sec. or more.

b) For M.V. motors - Manufacturer's standard box with epoxy or SRBF moulded terminal board.

4.9.4 The mounting arrangement of power and neutral side terminal boxes for HV motors shall be identical so that it shall be possible to interchange the boxes at site.

4.9.5 In case of H.V. motors, all the six leads of the motors shall be taken out, three on one side and three on the other side to separate terminal boxes. However, neutral shorting link shall be provided on the neutral box for star connection.

4.9.6 In case of M.V. motors, all the six leads of the motors shall be taken out to a common terminal box. Shorting links for delta connections shall be provided in the terminal box for motors 112 frame and above.

4.9.7 For increased safety motors and for motors with type of protection "n", the terminals shall be provided with positive locking device so that they do not become loose during normal operation.

4.9.8 The power terminal boxes shall have adequate clearances in between the terminals and also between the terminals and cable gland for proper termination of cables. Where more than one cable is required to be terminated in parallel, the spacing in the box shall be adequate for easy termination.

4.9.9 Separate terminal boxes shall be provided for connection of power, control and space heater cables.

4.9.10 All terminal boxes shall be complete with heavy duty double compression type cable glands and lugs/connectors to receive the external cables.

4.9.11 Where cross linked polyethylene cables are specified, the terminal box shall be suitably designed for proper termination of such cables.

4.9.12 The cable lugs shall be of tinned copper and suitable for crimping.

4.10 **Geared Motors**

Where geared motors are specified, the gears shall be oil lubricated, heavy duty as per AGMA class III and capable of transmitting the rated motor power continuously. They shall be capable of withstanding moderate shock loads having a service factor of 2 and the starting duties. They shall be silent and smooth in operation. Inspection glass shall be provided to indicate the oil level in the gear box.

All rights reserved

5.0 PERFORMANCE

5.1 Starting

5.1.1 The motors shall be capable of being started direct-on-line, unless otherwise specified.

5.1.2 The starting torque of each motor shall be higher than the initial resisting torque of the driven load through out the starting period even at a feeding voltage of 85% of the rated voltage for normal purpose motor and 80% of the rated voltage for special purpose motor.

5.1.3 The starting current shall not be greater than 6 times the rated current when the motors are started at full voltage including tolerances, unless otherwise specified.

5.1.4 The motors shall be suitable for the following starting cycle:

a) With the motor at ambient temperature - 2 successive starts and 3rd start after 5 minutes.

b) With the motor at steady state load temperature - 1 immediate start and 2nd start after 5 minutes. This sequence shall be repeated in the next hour.

5.1.5 Speed switch shall be provided, wherever required, to fulfil the starting conditions.

5.2 Locked Rotor Condition

5.2.1 The locked rotor withstand time (t_E), under hot condition at 110% of rated voltage shall be more than the starting time of the motor coupled to the load even at the lowest stipulated starting voltage by 2 secs. for motors, having starting time up to 10 secs. and by 5 secs. for motors, having starting time more than 10 secs.

5.2.2 For increased safety motors, t_E under hot condition shall not be less than 10 secs. The value of t_E shall be determined in the presence of purchaser's representative unless test certificate from an independent testing authority is submitted for similar motors. The time t_E and the locked rotor current shall be stamped on the name plate as well as indicated in the test certificates.

5.2.3 For deciding the time t_E in all cases, the temperature of the insulated stator and rotor shall not exceed the value stipulated under clause no. 5.4.3.

5.3 Running

5.3.1 All motors shall be continuous maximum rated (S1 duty as per IS: 325), unless otherwise specified.

5.3.2 The motors shall be capable of delivering the rated output without exceeding the specified temperature rise under the system voltage and frequency variation conditions as specified in the Design Philosophy-Electrical.

5.3.3 The motors shall be suitable for running at the rated load for 5 minutes duration at 80% voltage and for 1 Sec. duration at 70% voltage, without exceeding the specified temperature rise.

All rights reserved

5.4 **Temperature Rise**

5.4.1 The total temperature of the stator winding under full load running condition shall not exceed the values permissible for the specified insulation class. For increased safety motors, the total temperature shall be 10ºC less than for normal motors.

5.4.2 For explosion proof motors, the maximum surface temperature shall not exceed the values applicable for temperature class of the hazardous gases / vapours present in the surrounding area. However for type 'n' motors, the maximum allowable temperature shall not exceed 200ºC.

5.4.3 In case of starting and locked rotor conditions stipulated under clause nos. 5.1.4 and 5.2.1 respectively, the maximum temperature in the rotor shall not exceed the following values:

For squirrel cage rotor	-	300ºC
For wound rotor	-	As applicable to the insulation class
For explosion proof motor	-	As per temperature class of the hazardous gases / vapours, without exceeding the above temperature as applicable

6.0 COUPLING DETAILS

6.1 Unless otherwise specified, all motors shall be coupled to the driven equipment through flexible coupling.

6.2 Normally the coupling half for the motor shaft shall be supplied by the driven equipment supplier. The coupling half shall be keyed on the shaft with a tapered joint or shrunk with a straight joint. For this purpose, the motor manufacturer shall coordinate all details of the coupling system with the driven equipment manufacturer, wherever required.

6.3 Where rigid coupling is specified, the motor shaft shall have the desired class of accuracy.

6.4 For all vertical flange mounted motors, the limitations on shaft extension, run out, perpendicularity and eccentricity, as required by the driven machine supplier shall be complied with by the motor supplier.

6.5 i) If the motor is to be coupled to a reciprocating pump or compressor requiring fluctuating torque, the motor supplier shall ensure that the inertia of the driving and driven machine assembly shall be such that the variation in the armature current shall not exceed ±66% of the rated current while delivering full load.

ii) The measurement of armature current shall be done with the oscillograph.

iii) The additional fly wheel, if any, shall be assembled at such a distance from the motor so as to allow easy inspection of the windings.

iv) All necessary coordination with driven equipment manufacturer shall be carried out by the motor manufacturer.

6.6 i) Wherever belt drive is specified, the motor supplier shall ensure that the shaft extension and the bearings are suitable for the duty specified.

ii) Unless otherwise specified, the slide rails for all belt driven motors shall be supplied by the motor manufacturer.

All rights reserved

6.7 Spacer coupling shall be provided for all motor/pump to ease out the DOR checking/Maintenance without carrying out the shifting or removal of motor/pump.

7.0 ACCESSORIES

The motors shall be complete with the accessories.

7.1 **Space Heaters**

7.1.1 Space heaters rated for 240 V A.C. shall be provided to keep the winding dry for all high and medium voltage motors, except for motors rated below 30 KW which shall be suitable for space heating by connecting 24 V A.C to any of the two motor winding terminals. Provision for the same shall be made in the MCC/PMCC panel.

7.1.2 The location of the space heaters shall be such as to allow easy access for inspection, maintenance and replacement.

7.2 **Name Plates**

7.2.1 The name plates shall be of stainless steel with letters embossed on them.

7.2.2 The name plate shall contain all the relevant details as per IS: 325 and in addition shall indicate the following:

i) The description and code no. of motor

ii) Degree of protection of enclosure

iii) Temperature rise of windings under running condition

iv) Designation of bearings

v) Recommended type of lubricant and interval of lubrication

vi) Direction of rotation

vii) Mounting Arrangement

7.2.3 Flameproof motors shall have additional name plate containing relevant particulars as per IS: 2148.

7.2.4 Increased safety motors shall have additional name plate containing relevant particulars as per IS: 6381.

7.2.5 Motors with type of protection “n” shall have additional name plate containing relevant particulars as per IS: 9628.

7.3 **Embedded Temperature Detectors**

7.3.1 All high voltage motors shall be provided with 6 nos. of evenly distributed embedded resistance temperature detectors for measurement of winding temperature. These shall be located in positions at which the highest temperatures are likely to occur.

7.3.2 In addition, the high voltage motors shall be provided with

i) 1 no. RTD for hot air temperature measurement

All rights reserved

ii) 2 nos. RTDs (1 on each side) for bearing temperature measurement of oil lubricated bearings. For grease lubricated bearings, RTD shall be provided only where specified

7.3.3 These RTDs shall be of platinum having 100 ohm resistance at 0ºC and temperature coefficient as 3.850×10^{-3}.

7.3.4 The RTDs shall be 3 lead type having power frequency insulation level of 2KV.

7.3.5 The RTDs shall comply with the requirements laid down in IS: 2848.

7.4 **Dial Type Thermometers**

7.4.1 In high voltage motors, the measurement of hot air and bearing temperature (of oil lubricated bearings) by dial type thermometers shall be provided wherever specified.

7.4.2 The arrangement shall consist of a dial type of mercury-in-steel thermometer so mounted that its stem shall be located in the maximum temperature region.

7.4.3 The thermometer shall have two potential free contacts for alarm and trip.

7.4.4 All contacts shall be rated for 2 Amps. at 110 V D.C.

7.4.5 For bearing temperature measurement, separate thermometers shall be provided for each bearing.

7.4.6 For grease lubricated bearings, temperature measurement arrangement shall be provided only where specified.

7.5 **Oil Supply System**

7.5.1 For large sized motors, where forced oil lubrication system is considered, a common oil supply system for the motor and the driven equipment shall be provided by the driven equipment manufacturer.

7.5.2 However, the motor supplier shall quote separate price for the complete oil system of the motor.

7.5.3 The system shall be suitable for location near the motor.

7.5.4 The oil supply system for each motor shall include:

i) 2 Nos. 100% rated motor driven pumps with motors

ii) 1 No. oil tank complete with oil level gauge and thermometer

iii) 1 No. oil cooler

iv) 1 No. oil filter

v) 1 No. differential pressure switch for filter

vi) 2 Nos. pressure switches

vii) Necessary piping

viii) Necessary control and interlocks

All rights reserved

8.0 VIBRATIONS

The motor vibrations measured at the bearings must not exceed the limits specified in IS: 12075.

9.0 NOISE LEVEL

The motor noise level shall not exceed 85 dB measured at a distance of 1 metre from the motor.

10.0 PAINTING

10.1 Enclosures of the motor and its accessories shall be painted with two coats of anti-rust paint and two coats of anti-corrosive paint after suitable pre-treatment.

10.2 Epoxy paint, wherever specified, shall be used.

10.3 Unless otherwise specified, the finishing shade shall be light grey having shade No. 631 as per IS: 5.

11.0 TESTS AND INSPECTION

11.1 All motors shall be routine tested as per relevant standards.

11.2 Additional tests, wherever specified, shall be carried out on one motor of each rating.

11.3 For high voltage motors of each rating, polarization index test shall also be carried out.

11.4 All the above mentioned tests shall be carried out in the presence of purchaser's representative. In addition, the motor shall be subject to stage inspection at works and inspection at site for final acceptance.

11.5 These inspections shall, however, not absolve the vendor from their responsibility for making good any defects which may be noticed subsequently.

12.0 PACKING

12.1 The motors shall be properly packed to safeguard against weather conditions and handling during transit.

12.2 The shaft shall be properly clamped / supported.

12.3 Rust inhibiting agents shall be applied to fittings and sliding surfaces.

12.4 All flanges shall be closed with blanking plates to avoid entry of foreign materials.

12.5 The loose pieces of the motor / spare parts / Instruments shall be separately wrapped in moisture resistant paper and marked with identification marks and name plate of the corresponding motors.

12.6 The packing box / crate shall include a copy of installation, operation and maintenance manual.

All rights reserved

13.0 DRAWINGS AND DOCUMENTS

13.1 Drawings and documents as per Annexure-I shall be supplied, unless otherwise specified.

13.2 All drawings and documents shall have the following descriptions written boldly:

- Name of client
- Name of consultant
- Enquiry / order number with plant / project name
- Motor Code No. and Description

14.0 SPARES

14.1 Spares for operation and maintenance

Item wise unit prices of spare parts with recommended quantity shall be quoted along with the motors.

14.2 Commissioning Spares

Commissioning spares, as required, shall be supplied with the main equipment. Item wise list of recommended commissioning spares shall be furnished for approval.

14.3 Any other spare parts not specified, but required, shall also be quoted along with the offer.

14.4 All spare parts shall be identical to the parts used in the motors.

15.0 DEVIATIONS

15.1 Deviations, if any, from this standard shall be clearly indicated in the offer with reasoning.

All rights reserved

ANNEXURE - I

DOCUMENTATION FOR INDUCTION MOTORS

Sl. No.	Document Description	Documents Required (Y / N)		
		With Bid	For Approval	Final
1.	Specification Sheet and Technical Particulars completely filled-in	Y	Y	Y
2.	Dimensional Drawings	Y	Y	Y
3.	Drawings and data for air / water heat exchangers, if necessary	N	Y	Y
4.	Drawings and data for oil system, if necessary	N	Y	Y
5.	Characteristic curves			
	a) Thermal withstand curve	N	Y	Y
	b) Load Vs FL current	N	Y	Y
	c) Load Vs Efficiency	N	Y	Y
	d) Load Vs Power factor	N	Y	Y
	e) Load Vs Speed	N	Y	Y
	f) Voltage Vs Thermal Withstand time	N	Y	Y
	g) Starting current Vs Time	N	Y	Y
6.	Connection diagram for RTDs, thermometer etc.	N	Y	Y
7.	Terminal Box drawings	Y	Y	Y
8.	Illustrative and Descriptive catalogues	Y	N	Y
9.	Catalogues of bought out accessories	Y	N	Y
10.	Spare parts list	Y	N	Y
11.	Installation, Operation and Maintenance manual	N	N	Y
12.	Test certificates			
	a) Routine	N	N	Y
	b) Type	N	N	Y
	c) For enclosure	Y	N	Y
13.	Guarantee Certificates	N	N	Y

Note:

1. 4 hard copies & 1 soft copy shall be supplied with bid.
2. 4 hard copies & 1 soft copy shall be supplied for approval after order within 4 weeks from the date of LOI.
3. 8 hard copies & 2 soft copies in pen drive shall be submitted as final documents prior to despatch of the equipment. These shall be made in sets and supplied in fine plastic coated folder.

Y - Yes, N - No

All rights reserved

TECHNICAL SPECIFICATION

INTERLOCKING SWITCH SOCKET AND PLUG

All rights reserved

CONTENTS

All rights reserved

1.0 SCOPE

1.1 The standard covers the technical requirements of design, manufacture, testing at works and delivery in well packed condition of interlocking switch socket and plug.

2.0 STANDARDS TO BE FOLLOWED

2.1 The design, manufacture and testing of the equipment covered by this standard shall comply with the latest issue of IS-4160/ IEC-309 and other relevant Indian Standards, unless otherwise specified. Equipment complying with equivalent IEC standards shall also be acceptable.

2.2 The design and operational features of the equipment offered shall also comply with the provisions of latest issue of Indian Electricity Rules and other statutory acts and regulations. The supplier shall, wherever necessary, make suitable modifications in the equipment to comply with the above.

2.3 Wherever any requirement, laid down in this standard differs from that in Indian Standard Specifications, the requirement specified herein shall prevail.

3.0 SERVICE CONDITIONS

3.1 **Ambient conditions**

These shall be as indicated in Design Specification-Electrical.

3.2 **System details**

These shall be as indicated in Design Specification-Electrical.

4.0 OPERATING REQUIREMENTS

The equipment shall be suitable for operating at the rated capacity continuously, under the ambient condition indicated in Design Philosophy-Electrical, without exceeding the specified temperature rise and without any detrimental effect on any part.

5.0 GENERAL DESIGN AND CONSTRUCTIONAL FEATURES

5.1 The switch socket shall be heavy duty industrial type. The interlocking arrangement shall be such that it is not possible to insert or withdraw the plug with the switch in 'ON' position.

5.2 The switch sockets shall have dust, hose and weather proof construction conforming to IPW55 as per IS: 13947 and shall be suitable for outdoor use without any extra protection. All jointing surfaces shall be smoothly machined and of sufficient width to prevent ingress or dust. Further the covers shall be provided with continuous gaskets made of neoprene to prevent ingress of dust and moisture.

5.3 The enclosure of switch sockets and plugs shall be of cast aluminium alloy 4600 and suitable for fixing on wall / structure.

5.4 The enclosure shall be largely dimensioned in order to avoid temperature rise inside it which may damage the insulating materials and gaskets employed therein.

All rights reserved

5.5 The insulating materials used shall be non-hygroscopic, mould proof and treated with suitable varnish to withstand the ambient conditions.

5.6 All external hardware of diameter less than 8 mm shall be of stainless steel and those of diameter 8 mm or above shall be of mild steel zinc passivated.

5.7 Suitable arrangement for looping of cables from one switch socket to the other shall be provided. For switch sockets rated above 63A, looping shall be done from busbars and for switch sockets rated 63A and below, looping may be done from terminal block. Necessary terminals, cable glands and lugs for looping shall be provided. Also one no. The readed plug for each switch socket shall be supplied loose.

5.8 All the relevant information shall be provided on engraved name plate made of aluminium.

5.9 The enclosure shall be provided with two earthing terminals outside the body.

6.0 SPECIAL FEATURES FOR FLAME PROOF SWITCH SOCKET AND PLUGS

6.1 The enclosure shall be in addition of flame proof execution as per IS: 2148.

6.2 The enclosure group and temperature class shall be as indicated in specification sheet.

6.3 Cable shall enter the terminal chamber through flame proof compression type cable glands. From the terminal to the main enclosure, the connection shall be made through proper bushings. Direct entry of external cables into the main enclosure shall not be accepted.

6.4 An additional earthing terminal inside the terminal chamber shall be provided.

6.5 Switch socket, plug and cable glands must be certified by the Central Mining Research Institute, Dhanbad or any other statutory authority for use in the specified hazardous area.

6.6 Further interlocking shall be provided so that the contacts cannot be energised when the plug and socket are separated.

7.0 COMPONENT DETAILS

7.1 The rating of the components shall be as indicated in specification sheet.

7.2 Air Break Switches

7.2.1 The switches shall be quick make, quick break rotary type and of utilisation category AC-23 as per IS: 13947.

7.2.2 Switches shall be hand operated from outside the cover. The switch handle shall remain fixed to the front cover while removing the front cover.

7.3 H.R.C. Fuses

7.3.1 The sockets shall be provided with link type HRC fuses.

7.3.2 The fuses shall be capable of withstanding a short circuit current of 50 KA and shall be delayed action type conforming to IS: 13703. These shall be mounted on a shrouded base.

All rights reserved

7.4 **Socket Outlets**

7.4.1 The socket outlet shall be located in the lower part of the enclosure and shall be provided with a threaded aluminium cover attached to the body with G.I. chain, to protect the socket after extraction of the plug. Spring loaded automatic shutter shall not be acceptable.

7.4.2 The socket contacts shall maintain satisfactory spring pressure and contact with the corresponding plug under normal service conditions.

7.4.3 The socket contacts shall be sunk well below the surface of the socket- outlets so as to make it impossible to be touched unintentionally.

7.4.4 An earthing contact shall be provided in the socket outlet which shall ensure making and breaking respectively of its contact with the earthing pin of the plug before and after making and breaking of the corresponding current carrying contacts.

7.5 **Plugs**

7.5.1 The plugs shall be so constructed so that these can be easily fitted in to the socket outlets.

7.5.2 These shall be provided with knurled knob arrangement for screwing on the body of the socket so that it can be securely fixed on the top.

7.5.3 The plug base and cover shall be firmly secured to each other and shall be sufficiently robust in construction to withstand normal usage.

7.5.4 The plug pins shall preferably be of single part. The earthing pin shall be slotted with a single slot and shall be larger in dimension than other pins.

7.5.5 The plug and socket contacts shall be self aligning type with best electrical continuity.

7.5.6 The plug shall be provided with dust proof cable entry suitable for receiving TRS flexible heavy duty copper conductor cable of specified size. The arrangement shall be such that the conductors are relieved from strain including twisting where they are connected to the terminals and that the outer surface of the cable at the place of entry is not damaged.

7.5.7 Insulating barriers forming an integral part of the plug shall ensure separation of metals and bare flexible conductors at different potentials.

7.6 **Cable Termination**

7.6.1 Switch socket shall have cable termination arrangement on the upper part of the housing and shall be provided with side entries, one on either side, through heavy duty double compression type rolled aluminium cable glands suitable for 1.1 KV grade XLPE insulated armoured and PVC sheathed cables.

7.6.2 The terminal blocks shall be pressure clamp type for switch socket rated up to 63A and bolted lug type for higher ratings. The terminals shall be rated for at least 1.5 times the switch rating.

8.0 PAINTING

8.1 The enclosure after suitable pre-treatment shall be painted with two coats of anti-rust paint followed by two coats of anti-corrosive paint.

8.2 Epoxy based paint shall be used.

All rights reserved

8.3 All paints shall be carefully selected to withstand tropical heat and extremes of weather. The paint shall not scale off, crinkle or be removed by abrasion due to normal handling.

8.4 The finishing shade shall be light grey shade no.631 as per IS: 5, unless specified otherwise.

9.0 TESTS AND INSPECTION

9.1 The switch sockets and plugs shall be subjected to routine tests as per IS-4160 and other relevant standards.

9.2 Wherever specified, additional tests shall be carried out on one switch socket and plug of each rating.

9.3 The tests shall be carried out in the manufacturer's works in the presence of purchaser's representative. In addition to the above tests, the equipment shall be subject to stage inspection at works and inspection at site for final acceptance.

9.4 These inspections shall, however, not absolve the vendor from their responsibility for making good any defect which may be noticed subsequently.

10.0 DRAWINGS AND DOCUMENTS

10.1 Drawings and documents as per Annexure-I shall be supplied, unless otherwise specified.

10.2 All drawings and documents shall have the following descriptions written boldly.

- Name of client
- Name of consultant
- Enquiry / Order Number with plant / project name
- Code No. and Description

11.0 SPARES

11.1 Spares for operation and maintenance

Item wise unit prices of spare parts with recommended quantity shall be quoted along with the equipments.

11.2 Commissioning Spares

Commissioning spares, as required, shall be supplied with the main equipment. Item wise list of recommended commissioning spares shall be furnished for approval.

11.3 Any other spare parts not specified, but required, shall also be quoted along with the offer.

11.4 All spare parts shall be identical to the parts used in the equipment.

12.0 PACKING

12.1 The switch socket and plug shall be properly packed to safeguard against weather conditions and handling during transit. It shall be wrapped in polythene bags and an additional wrapping of bitumen paper shall also be provided to make it completely water proof before the equipment is packed in wooden crates.

All rights reserved

12.2 The packing box shall contain a copy of the installation, operation and maintenance manual.

13.0 DEVIATIONS

13.1 Deviations, if any, from this standard shall be clearly indicated in the offer with reasoning.

All rights reserved

ANNEXURE – I

DOCUMENTATION FOR INTERLOCKING SWITCH SOCKET AND PLUG

Sl.No.	Description	Documents Required (Y / N)		
		With Bid	For Approval	Final
1.	Specification Sheet	Y	Y	Y
2.	Technical Particulars	Y	Y	Y
3.	General arrangement and foundation drawing	Y	Y	Y
4.	Schematic / wiring diagram	N	Y	Y
5.	Illustrative and descriptive literature	Y	N	Y
6.	Catalogue for bought out accessories	Y	N	Y
7.	Installation operation and maintenance manual	N	N	Y
8.	Test Certificates			
	a) Type	N	N	Y
	b) Routine	N	N	Y
9.	Guarantee Certificate	N	N	Y
10.	Certificate of flameproofness from statutory testing authority wherever applicable.	Y	N	Y
11.	Spare parts list with identification marks	Y	N	Y

Note:

1. 4 hard copies & 1 soft copy shall be supplied with bid.
2. 4 hard copies & 1 soft copy shall be supplied for approval after order within 4 weeks from the date of LOI.
3. 8 hard copies & 2 soft copies in pen drive shall be submitted as final documents prior to despatch of the equipment. These shall be made in sets and supplied in fine plastic coated folder.

Y - Yes, N - No

All rights reserved

TECHNICAL SPECIFICATION

CABLES

All rights reserved

CONTENTS

All rights reserved

1.0 SCOPE

1.1 This standard covers the technical requirements of design, manufacture, testing at works and dispatch in well packed condition of power and control cables.

2.0 STANDARDS TO BE FOLLOWED

2.1 The design, manufacture and testing of cables covered by this standard shall comply with the latest issue of following Indian Standards, unless otherwise specified. Equipment complying with equivalent IEC standards shall also be acceptable.

IS: 1554 Part (I)	--	PVC insulated (heavy duty) electric cables for working voltages upto and including 1100 volts.
IS: 1554 Part (II)	--	PVC insulated (heavy duty) electric cables for working voltages from 3.3 KV upto and including 11 KV.
IS: 7098 Part (I)	--	Cross linked polyethylene insulated PVC sheathed cables for working voltages upto and including 1100 volts.
IS: 7098 Part (II)	--	Cross linked polyethylene insulated PVC sheathed cables for working voltages from 3.3 KV upto and including 33 KV
IS: 694	--	PVC insulated cables for working voltages upto and including 1100 volts
IS: 5831	--	PVC insulation and sheath of electric cables

2.2 The design and operational features of the cables offered shall also comply with the provisions of latest issue of the Indian Electricity Rules and other relevant Statutory Rules & Regulations. The supplier shall, whenever necessary, make suitable modification in the cables to comply with the above mentioned rules.

2.3 Wherever any requirement, laid down in this standard, differs from that in Indian Standard Specifications, the requirement specified herein shall prevail.

3.0 SERVICE CONDITIONS

3.1 Ambient Conditions

These shall be as indicated in Design Specification-Electrical.

3.2 System Details

These shall be as indicated in Design Specification-Electrical.

4.0 OPERATING REQUIREMENTS

The cables shall be suitable for operating continuously at the rated capacity as specified in relevant I.S. under the ambient conditions in Design Philosophy-Electrical without exceeding the permissible temperature rise and without any detrimental effect on any part.

All rights reserved

5.0 GENERAL DESIGN AND CONSTRUCTIONAL FEATURES

5.1 The design, manufacture and workmanship of cables shall be in accordance with the latest practice.

5.2 All materials to be used shall be new, unused and of the best quality.

5.3 **Conductors**

The power cables shall be of stranded Aluminium / copper round or shaped conductors and control cables shall be of annealed high conductivity stranded copper round conductors. The conductors shall comply with the requirements of IS: 8130.

5.4 **Insulation**

The conductor insulation shall be type A/C and shall comply with relevant IS.

5.5 **Fillers**

The cables shall have suitable fillers wherever required, laid up with conductors to provide substantially circular cross section before the inner sheath is applied.

5.6 **Inner Sheath**

Inner sheath, wherever applicable shall be ST1/ ST2 type compound applied by extrusion process except for paper cables for which it shall be of lead or lead alloy.

5.7 **Armouring**

All power and control cables shall be armoured. The single core cables shall be armoured with hard drawn Aluminium taps / wires or any other suitable nonmagnetic material. All other cables shall have galvanized steel wire / strip armouring.

5.8 **Outer Sheath**

The outer sheath shall be ST1/ ST2 type compound applied by extrusion process and suitable to withstand atmospheric pollution, resistance to termites, fire retardant and coloured black.

5.9 **Screening**

Screening over conductor and insulation shall be provided as per relevant standard unless specified otherwise. The screening for control cables if specified shall be of aluminium, mylor or equivalent and provided with tinned drain wire which shall be continuous and permanently connected to the screen.

5.10 **Identification**

The individual cores of cables shall be coloured as per relevant IS. Where it is not possible to distinguish the cores by colour, coloured strip shall be applied on the cores or core nos. shall be marked on each core at regular intervals. All cables shall carry the manufacturer's name or trade mark, the cable size, voltage rating and year of manufacture at intervals not exceeding 100 meters. Running meter markings shall also be provided throughout the length of the cable.

All rights reserved

5.11 **Dimension**

The overall dia. and dia. under armour of the cables shall be indicated by the vendor in the technical particulars. These shall be guaranteed with a tolerance of ± 5% but not exceeding 2 mm.

5.12 The cut ends of the cables shall be sealed by means of non-hygroscopic materials.

6.0 SPECIAL PURPOSE CABLES

6.1 **Flame Retardant Low Smoke Cables**

Flame retardant low smoke cables shall have outer sheath of PVC having following values.

- Minimum oxygen index - 29%
- Minimum temperature index - 250ºC
- Maximum acid gas generation - 20%
- Maximum smoke density rating - 60%

6.2 **Heat Resistant Cables**

Heat resistant cables, where specified in specification sheet, shall be of silicon rubber insulated laid circular with asbestos worming and overall glass fibre braided and varnished. Silicon rubber insulating compound shall conform to IS: 6380 and the constructional features shall conform generally to IS: 9968.

7.0 CABLE DRUM

7.1 The cables shall be supplied in non-returnable wooden drums (or steel drums if specified) of heavy construction. The wood used for construction of the drums shall be properly seasoned, sound and free from defects.

7.2 Cables shall be supplied in specified drum lengths. Where no such indication is given, standard drum lengths may be offered.

7.3 The tolerance on each drum of cable shall not exceed ± 2.5%. However, no negative tolerance on HV cables is acceptable.

7.4 All cable drums shall have stencilled data as per relevant IS as well as the purchaser's order no., item no. & drum no.

8.0 TESTS AND INSPECTION

8.1 The following tests shall be carried out on the cables as per relevant IS.

i) Routine Tests - On all cables
ii) Acceptance tests - On representative length of each size
iii) Type tests - Wherever specified on one cable drum of each size

8.2 In addition, the following tests shall be carried out on all fire retardant low smoke cables as per IS or as per the following standards:

All rights reserved

i) Oxygen and temperature index test as per ASTM-D-2863

ii) Acid gas emission test as per IEC-754 Part-I

iii) Smoke density test as per ASTM-D-2843

iv) Flammability test as per IEC-332 Part-I or IS-10810

8.3 All the above mentioned tests shall be carried out in the presence of purchaser's representative. In addition, the cables shall be subjected to stage inspection at works and inspection at site for final acceptance.

8.4 These tests and inspections shall, however, not absolve the vendor from their responsibility for making good any defect which may be noticed subsequently.

9.0 DRAWINGS AND DOCUMENTS

9.1 Drawings and documents as per Annexure-I shall be supplied, unless otherwise specified.

9.2 All drawings and documents shall have the following descriptions written boldly.

- Name of client
- Name of consultant
- Enquiry / Order Number with plant / project name
- Code No. and Description

10.0 DEVIATIONS

10.1 Deviations, if any, from this standard shall be clearly indicated in the offer with reasoning.

All rights reserved

ANNEXURE - I

DOCUMENTATION FOR CABLES

Sl. No.	Document Description	Documents Required (Y / N)		
		With Bid	For Approval	Final
1.	Specification Sheet, duly completed	Y	Y	Y
2.	Technical Particulars, duly filled-in	Y	Y	Y
3.	Illustrative and Descriptive catalogues	Y	N	Y
4.	Installation, Termination and Jointing Instructions	N	N	Y
5.	Test certificates			
	a) Routine	N	N	Y
	b) Type	Y	N	Y
6.	Guarantee Certificates	N	N	Y

Note:

1. 4 hard copies & 1 soft copy shall be supplied with bid.
2. 4 hard copies & 1 soft copy shall be supplied for approval after order within 4 weeks from the date of LOI.
3. 8 hard copies & 2 soft copies in pen drive shall be submitted as final documents prior to despatch of the equipment. These shall be made in sets and supplied in fine plastic coated folder.

Y - Yes, N - No

All rights reserved

TECHNICAL SPECIFICATION

PREFABRICATED LADDER TYPE CABLE RACKS

All rights reserved

CONTENTS

LIST OF ATTACHMENTS

All rights reserved

1.0 SCOPE

1.1 This standard covers the technical requirements of design, fabrication, testing at works and delivery in well-packed condition of prefabricated ladder type cable racks.

1.2 The standard shall be read in conjunction with Drawing Nos. PDS: E 530 to 538 (9 Sheets) attached with this standard.

2.0 STANDARDS TO BE FOLLOWED

2.1 The design, manufacture and testing of the cable racks covered by this standard shall comply with the latest issue of following and other relevant Indian Standards, unless otherwise specified. Equipment complying with equivalent IEC standards shall also be acceptable.

IS: 733	--	Wrought aluminium and aluminium alloy bars, rods and sections for general engineering purposes
IS: 2629	--	Recommended practice for hot dip galvanising on iron and steel
IS: 4759	--	Hot dip zinc coatings on structural steel and other allied products

2.2 Wherever any requirement, laid down in this standard, differs from that in Indian Standard Specifications, the requirement specified herein shall prevail.

3.0 GENERAL DESIGN AND CONSTRUCTIONAL FEATURES

3.1 Ladder type cable racks shall be fabricated as per attached Drawing Nos. PDS: E 530 to PDS: E 538 (9 Sheets).

3.2 Cable racks and accessories such as coupler plate, tees, bend, elbows etc. shall be fabricated from 3 mm thick mild steel galvanised sheet or 4 mm thick aluminium 19000 H2 alloy sheet extrusion conforming to designation No. 64430 and condition WP as per IS: 733.

3.3 G.I. racks and accessories shall have zinc coating of 800 gm/sq. metre applied by hot dip galvanising process. Galvanising shall be uniform, adherent, smooth and free from defects.

3.4 The finished rack and accessories shall be free from sharp edges and corners, burrs and un-evenness. Stepped arrangement of bending is not acceptable. The channel members in the bending shall have uniform curvature and shall be made out of single piece.

3.5 The racks shall be supplied in minimum length of 2.4 metre.

All rights reserved

3.6 Each straight length and bend shall be supplied with two coupling plates fitted at each side channel at one end. The coupling plates shall be supplied with bolts, nuts and washers fitted at the other four holes for fixing to adjoining member.

3.7 Coupling plate shall be designed to permit longitudinal adjustment upto ± 10 mm and skew upto 10º.

3.8 Clamping arrangement as per attached drawings shall be provided for fixing the rack with the cross support as required.

3.9 All the bends, tees and junctions shall be made sufficiently rigid by providing suitable reinforcement on rungs as required.

3.10 The rungs shall be connected to the side channels by continuous welding alongwith three sides of rung. Aluminium rack shall be welded by TIG welding process.

3.11 All hard wares such as nuts, bolts, washers and crank bolts shall be cadmium plated.

3.12 Tolerances in various dimension shall be follows:

Length	--	± 5 mm
Width	--	± 2 mm
Height	--	± 1 mm
Bend	--	± 1 mm
Thickness	--	± 0.2 mm

Positive tolerance on total quantity upto ± 5% is acceptable. However, negative tolerance on total quantity is not acceptable.

4.0 MARKING

The packing shall be clearly marked on the outside (on top side & ends) in indelible ink with the following minimum details:

-- Part No.

-- Size of Tray (Length x Width x Height)

-- No. of Tray / Section, Total Weight

-- Material Specification

-- Client's Name

-- Purchase Order No.

-- Manufacturer's Name

5.0 TESTS AND INSPECTION

5.1 Following tests shall be carried out on prefabricated cable racks:

All rights reserved

Visual inspection and checking for

i) Quality and thickness of raw material

ii) Dimensions as per drawing.

iii) Quality of welding (before galvanising for G.I. racks)

iv) Preparation of metal surfaces (for G.I. racks).

5.2 After galvanising, G.I. cable racks shall be subjected to following tests as per IS:4759.

i) Mass of galvanising coating -- At any location the thickness of zinc coating shall not be less than 90 micron. However, average thickness of zinc coating shall not be less than 113 micron.

ii) Uniformity of galvanising coating.

iii) Adhesion of galvanising coating.

iv) 3 samples from each lot shall be taken for testing.

v) From each lot and size of rack, measure length of 10 trays and average length to be multiplied by number of trays to arrive for total length.

5.3 All the above tests shall be carried out in the manufacturer's works in the presence of Purchaser's representative. In addition to the above tests, the cable racks and its accessories shall be subjected to stage inspection at works and inspection at site for final acceptance.

5.4 These tests and the Purchaser's inspection shall, however, not absolve the vendor from their responsibility for making good any defect which may be noticed subsequently.

6.0 DRAWINGS AND DOCUMENTS

6.1 Drawings and documents as per Annexure-I shall be supplied, unless otherwise specified.

6.2 All drawings and documents shall have the following descriptions written boldly.

- Name of client
- Name of consultant
- Enquiry / Order Number with plant / project name
- Code No. and Description

7.0 DEVIATIONS

7.1 Deviations, if any, from this standard shall be clearly indicated in the offer with reasoning.

7.2 Deviations, if any, from the data furnished in specification sheet shall be indicated therein beside the data by encircling it.

All rights reserved

ANNEXURE - I

DOCUMENTATION FOR PRE-FABRICATED LADDER TYPE CABLE RACKS

Sl. No.	Document Description	Documents Required (Y / N)		
		With Bid	For Approval	Final
1.	Illustrative and Descriptive catalogues	Y	N	Y
2.	Installation, Termination and Jointing Instructions	N	N	Y
3.	General Arrangement Drawings, showing details of rack, coupling pieces, fasteners, etc.	Y	Y	Y
4.	Test certificates	N	N	Y
5.	Guarantee Certificates	N	N	Y

Note:

1. 4 hard copies & 1 soft copy shall be supplied with bid.
2. 4 hard copies & 1 soft copy shall be supplied for approval after order within 4 weeks from the date of LOI.
3. 8 hard copies & 2 soft copies in pen drive shall be submitted as final documents prior to despatch of the equipment. These shall be made in sets and supplied in fine plastic coated folder.

Y - Yes, N - No

All rights reserved

TECHNICAL SPECIFICATION

LOCAL CONTROL STATION

All rights reserved

CONTENTS

All rights reserved

1.0 SCOPE

1.1 This standard covers the technical requirements of design, manufacture, testing at works and delivery in well-packed condition of Local Control Stations.

2.0 STANDARDS TO BE FOLLOWED

2.1 The design, manufacture and testing of the equipment covered by this standard shall comply with the latest issue of IS: 13947 and other relevant Indian Standards, unless otherwise specified. Equipment complying with equivalent IEC standards shall also be acceptable.

2.2 The design and operational features of the equipment offered shall also comply with the provisions of latest issue of the Indian Electricity rules and other relevant statutory Acts and Regulations. The supplier shall, wherever necessary, make suitable modification in the equipment to comply with the above.

2.3 Wherever any requirement, laid down in this standard differs from that in Indian Standard Specifications, the requirement specified herein shall prevail.

3.0 SERVICE CONDITIONS

3.1 **Ambient Conditions**

These shall be as indicated in Design Specification-Electrical.

3.2 **System Details**

These shall be as indicated in Design Specification-Electrical.

4.0 OPERATIONAL REQUIREMENTS

This equipment and associated components shall be suitable for operating satisfactorily under the specified ambient and system conditions.

5.0 GENERAL DESIGN AND CONSTRUCTIONAL FEATURES

5.1 The Control Stations shall be suitable for control voltage not exceeding 500V, 50 Hz AC or 220V D.C.

5.2 The enclosure shall be of die cast Aluminium alloy LM-6. As an alternative to cast Aluminium, fibre glass enclosure is also acceptable.

5.3 The equipment shall have dust, hose and weather proof construction equivalent to IPW-55 as per IS: 13947. These shall be suitable for outdoor location without any additional protection or cover.

5.4 A rain-hood shall be offered as an additional item. It shall be made of 14 gauge Aluminium sheet bent to shape. In case of fibre glass enclosure, these can be made of fibre glass.

5.5 All external hardware of diameter less than 8 mm shall be of stainless steel and those of diameter 8 mm and above shall be of mild steel zinc passivated. For fibre glass enclosure Nylon PVC bolts of diameter 8 mm may be used.

All rights reserved

5.6 The control station shall preferably be with bolted cover. The bolts for retaining the cover in position shall be provided with 10 mm dia. stainless steel and these shall be so arranged that they do not pierce into the door gasket.

5.7 All the components shall be mounted on a base plate inside the enclosure. Necessary actuating system for control switch, push button, non yellowing acrylic/ glass cover for ammeter and indication lamps shall be provided on the front cover. No wiring shall be carried out on the front cover.

5.8 The layout of components in the control station shall be liberal and standardised.

5.9 All mating surfaces shall be smoothly machined and shall be of sufficient width of at least 6 mm. The covers shall be provided with continuous gasket made of neoprene or synthetic rubber to prevent ingress of dust and moisture. The gasket shall be held in position in groove provided in the enclosure and shall be pressed all around uniformly by suitably shaped projection of the door. Gaskets simply glued to the surface are not acceptable.

5.10 The enclosure shall be suitable for mounting on wall or on steel structure. 4 Nos. holes suitable for 12 mm bolts shall be provided outside the enclosure for fixing the control stations.

5.11 The internal wiring shall be carried by means of single core PVC insulated 1.5 sq. mm stranded copper conductor cable. All termination shall be made with crimping type proper size lugs and shall be properly ferruled.

5.12 The control stations shall be completely factory wired and ready for external cable connection.

5.13 For easy identification, numbering ferrules shall be provided on all wiring at both ends i.e. equipment end and terminal block end. Terminals for external wiring shall be numbered

5.14 The enclosure shall be provided with two earthing terminals with studs of 8 mm. dia. projecting outside the enclosure for connection to earth. These terminals shall not pierce through the enclosure and shall be marked with earthing symbol.

5.15 Each control station shall be provided with minimum 2 mm thick stainless steel name plates or consisting of black Perspex with white engraving indicating the code number and description of the equipment controlled by it. Similar labels shall be provided for all indication lamps, push buttons and control switches. The name plate and label shall be fixed with screws only.

6.0 SPECIAL FEATURES FOR FLAME PROOF LOCAL CONTROL STATION

6.1 The enclosure shall be in addition, of flameproof execution as per IS: 2148.

6.2 The control stations shall be suitable for hazardous area of enclosure group and temperature class.

6.3 Cables shall enter the terminal box through flame proof cable gland. From the terminal chamber to the main enclosure, the connections shall be made through proper bushings. Direct entry of external cables into the main enclosure shall not be accepted. All entries shall be provided with stainless steel inserts.

All rights reserved

6.4 An additional earthing terminal inside the terminal chamber shall be provided.

6.5 Local control stations and cable gland must be certified by the Central Mining Research Institute, Dhanbad or any other statutory authority for use in the specified hazardous area.

7.0 COMPONENT DETAILS

7.1 Local control stations shall be provided with controlling and indicating elements.

7.2 **Trip-Neutral-Close Switch**

TRIP-NEUTRAL-CLOSE switch shall be double pole, 3 position, pistol grip, rotary type having self spring return feature to neutral position. The contacts shall be of phosphor bronze and shall be provided with two breaks in series. Mechanical sequence device to prevent two successive movements to the same position shall be fitted. The switch shall be capable of being padlocked in the 'TRIP' position.

7.3 **'Auto-Manual' Switch**

'Auto-Manual' switch shall be single pole stay put type having three positions "AUTO-OFF-MANUAL". Provision shall be made to padlock the switch in the "OFF" position.

7.4 **Selector Switch / Lock Service Switch**

These shall be single pole stay put type having two position with a pistol grip handle and capable of being padlocked in one of the position.

7.5 All the switches shall be rotary type with snap or wiping action contact and having a set of normally open and closed contacts in each position. All switches shall be provided with pistol grip handle.

7.6 **'Off-Auto-On' Switch**

7.6.1 'OFF-AUTO-ON' switch shall be in minimum three stack configuration, each stack having three positions with spring return from 'ON' to 'Auto' position and lockable in 'OFF' position by means of padlock.

7.6.2 The switch shall have sliding contact between 'AUTO' and 'ON' position. In 'OFF' position the contact shall be completely broken from 'AUTO' position.

7.7 **Push Buttons**

These shall be spring loaded, with a set of normally closed and open contacts. The push buttons for 'start' shall be shrouded type and coloured green while 'stop' push buttons shall be un-shrouded type and coloured red. Provision shall be made to padlock the 'stop' push button in 'OFF' position. The fixing ring shall be metallic white. An oil proof rubber cap shall preferably be provided.

7.8 The switches and push buttons shall conform to utilization category AC11/ DC11 as per IS: 13947. The contact shall be rated to make, break and carry inductive current of 5 Amp. at 415 V AC and 1 Amp of 220V DC. The contact arrangement shall be as shown in the terminal drawings. Built in locks instead of padlocking are not acceptable.

All rights reserved

7.9 **Indication Lamps**

7.9.1 LED type indication lamps shall be provided to indicate the various circuit conditions as shown in the terminal drawings.

7.9.2 The LEDs shall provide good illumination through a viewing angle of 180º. The LEDs shall have lumen output of 200 milli Candella in the axial direction.

7.9.3 The colour of the LED indication for various functions shall be as follows:-

RED : For 'ON' Indication
GREEN : For 'OFF' Indication
WHITE : For "Ready for Service" Indication

7.10 **A.C. Ammeters**

The ammeter shall be flush mounting, moving iron spring controlled type, of accuracy class 1.5 as per IS:1248, with square face of minimum size 72 mm x 72 mm having scale range 0-240º. The ammeter shall be provided with uniform scale up to CT primary current and compressed end scale up to 6 times the CT primary current. Adjustable red pointer shall be provided to indicate the full load current of the motors. Zero adjusters shall be provided for operation from the front of the meter. All ammeters shall be operated through 1Amp. CTs only. The CT ratio and full load current shall be as indicated in specification sheet.

7.11 **D.C. Ammeters**

The D.C. ammeter shall be shunt operated. These shall be moving coil or moving iron type of accuracy class 1.5 as per IS: 1248.

7.12 **Terminal Blocks**

All control stations shall be provided with terminal blocks. Terminal blocks shall be located at a minimum distance of 50 mm from the bottom of the enclosure. The terminal blocks for the control station shall be suitable for conductor sizes of 2.5 mm^2. These shall be of pressure clamp type design mounted on the base channel. The minimum rating of terminal block shall be 16 Amp.

7.13 **Cable Glands**

The cables for the external connections, shall enter the terminal chamber through heavy duty double compression type rolled Aluminium cable glands suitable for 2.5 sq. mm PVC insulated, armoured, and PVC sheathed copper conductor 1.1 KV grade cables. The number and cores of control cables shall be as indicated in specification sheet. The cable gland shall be fitted in a threaded hole.

8.0 PAINTING

8.1 The enclosure after suitable pre-treatment shall be painted with two coats of anti-rust paint followed by two coats of anticorrosive paint.

8.2 Epoxy based paint shall be used.

All rights reserved

8.3 All paints shall be carefully selected to withstand tropical heat and extremes of weather. The paint shall not scale off, crinkle or be removed by abrasion due to normal handling.

8.4 Unless otherwise specified, the finishing shade shall be of light grey having shade no. 631 as per IS: 5.

9.0 TESTS AND INSPECTION

9.1 All equipment shall be routine tested as per relevant standards.

9.2 Additional tests, wherever specified, shall be carried out.

9.3 All the above mentioned tests shall be carried out in the presence of purchaser's representative. In addition, the equipment shall be subjected to stage inspection at works and inspection at site for final acceptance.

9.4 These inspections shall, however, not absolve the vendor from their responsibility for making good any defect which may be noticed subsequently.

10.0 DRAWINGS AND DOCUMENTS

10.1 Drawings and documents as per Annexure-I shall be supplied, unless otherwise specified.

10.2 All drawings and documents shall have the following descriptions written boldly.

- Name of client
- Name of consultant
- Enquiry / Order Number with plant / project name
- Code No. and Description

11.0 SPARES

11.1 Spares for operation and maintenance

Item wise unit prices of spare parts with recommended quantity shall be quoted along with the main equipment.

11.2 Commissioning Spares

Commissioning spares, as required, shall be supplied with the main equipment. Item wise list of recommended commissioning spares shall be furnished for approval.

11.3 Any other spare parts not specified, but required, shall also be quoted along with the offer.

11.4 All spare parts shall be identical to the parts used in the equipment.

12.0 PACKING

12.1 The local control stations shall be properly packed to safeguard against weather conditions and handling during transit. It shall be wrapped in polythene bags and an additional wrapping of bitumen paper shall also be provided to make it completely water proof before the equipment is packed in wooden crates.

All rights reserved

12.2 The packing box shall contain a copy of the installation, operation and maintenance manual.

13.0 DEVIATIONS

13.1 Deviations, if any, from this standard shall be clearly indicated in the offer with reasoning.

All rights reserved

ANNEXURE - I

DOCUMENTATION FOR LOCAL CONTROL STATIONS

Sl. No.	Document Description	Documents Required (Y / N)		
		With Bid	For Approval	Final
1.	Specification Sheet, duly completed	Y	Y	Y
2.	Technical Particulars, duly filled-in	Y	Y	Y
3.	General Arrangement Drawings	Y	Y	Y
4.	Schematic Diagrams	N	Y	Y
5.	Illustrative and Descriptive catalogues	Y	N	Y
6.	Catalogues of bought out accessories	Y	N	Y
7.	Spare parts list	Y	N	Y
8.	Installation, Operation and Maintenance manual	N	N	Y
9.	Test certificates			
	a) Routine	N	N	Y
	b) Type (only for flameproof equipment)	N	N	Y
	c) For enclosure	Y	N	Y
10.	Guarantee Certificates	N	N	Y

Note:

1. 4 hard copies & 1 soft copy shall be supplied with bid.
2. 4 hard copies & 1 soft copy shall be supplied for approval after order within 4 weeks from the date of LOI.
3. 8 hard copies & 2 soft copies in pen drive shall be submitted as final documents prior to despatch of the equipment. These shall be made in sets and supplied in fine plastic coated folder.

Y - Yes, N - No

All rights reserved

TECHNICAL SPECIFICATION

JUNCTION BOX

All rights reserved

CONTENTS

All rights reserved

1.0 SCOPE

1.1 This standard covers the technical requirements of design, manufacture, testing and inspection at works and delivery in well packed condition of junction boxes.

2.0 STANDARDS TO BE FOLLOWED

2.1 The design, manufacture and testing of the equipment covered by this standard shall comply with the latest issue of relevant Indian standards unless otherwise specified. Equipment complying with equivalent IEC standards shall also be acceptable.

2.2 Flameproof & increased safety junction boxes shall in addition, comply with the requirement as laid down in IS: 2148 & IS: 6381 respectively.

2.3 The design and constructional features of the junction boxes offered shall also comply with the provision of latest issue of the Indian Electricity Rules and other relevant Statutory Rules & Regulations. The supplier shall, whenever necessary, make suitable modification in the equipment to comply with the above mentioned rules.

2.4 Wherever any requirement laid down in this standard differs from that in Indian Standard specifications, the requirement specified herein shall prevail.

3.0 SERVICE CONDITIONS

3.1 **Ambient Conditions**

These shall be as indicated in Design Specification-Electrical.

3.2 **System Details**

The details of power supply system shall be as indicated in Design Specification-Electrical.

4.0 GENERAL DESIGN & CONSTRUCTIONAL FEATURES

4.1 The junction boxes shall be dust and weather proof and suitable for installation outdoors without extra protection. The degree of protection shall be IP-55 as per IS: 4691.

4.2 The junction boxes shall be of die cast aluminium alloy LM-6 with domed / suspension covers. As an alternative to cast aluminium, fibre glass enclosure is also acceptable if specified in specification sheet.

4.3 The casting of the junction boxes and their cover shall be pressure die cast. The casting shall be uniform and free from blow holes. All mechanical surfaces shall be free from burrs, dents and internal roughness.

4.4 All external hardware of diameter less than 8 mm shall be of stainless steel and those of diameter 8 mm and above shall be of mild steel zinc passivated. For fibre glass enclosure Nylon PVC bolts of diameter 8 mm may be used.

4.5 The clearances and creepage distances shall be maintained inside the junction boxes as per relevant Indian standard.

4.6 The junction boxes shall be suitable for wall / structure / ceiling mounting and necessary arrangement for mounting the same shall be provided.

All rights reserved

4.7 The junction boxes shall be provided with continuous gasket made of neoprene or synthetic rubber to prevent ingress of dust. The gasket shall be held in position in groove provided in the enclosure and shall be pressed all around uniformly by suitably shaped projection of the door. Gaskets simply glued to the surface are not acceptable.

4.8 The junction boxes housing terminal block shall be moulded type made of DMC / Fibre glass. Threaded terminals shall be made of brass (nickel plated or tinned) and provided with two tightening threaded nuts and four washers all made of brass (nickel plated or tinned). The terminals shall have two shorting links each horizontally placed connecting three terminals.

4.9 The terminal block shall be fitted with junction boxes base by means of 2 nos. 1/2" long nickel plated brass screws.

4.10 The junction boxes shall be provided with two nos. external earthing terminals and 1 no. internal earthing terminal.

4.11 All live parts inside the junction boxes shall be insulated and shall withstand a test voltage of 2.5 KV for 1 minute.

4.12 The junction boxes shall be provided with heavy duty double compression type rolled Al cable glands to suit the cable entries.

4.13 Threaded blanking plugs shall be provided for junction boxes to plug out the entries not in use as indicated in bill of quantities enclosed.

4.14 The junction boxes shall be provided with a blank stainless steel tag plate fastened to the junction box top cover with two stainless steel screws. The plate shall be at least 25 mm wide, 100 mm long and 1 mm thick.

4.15 For flameproof / increased safety junction boxes, the manufacturer shall submit copies of test certificates from statutory authorities clearly stating that the junction boxes as well as cable glands / blanking plugs are suitable for specified hazardous area.

4.16 **15 Amp. Junction Box**

4.16.1 The junction boxes shall be 4 way dome cover type.

4.16.2 The dimensions of the junction boxes with their cover and accessories shall be generally as per PDS: E-547.

4.16.3 The junction boxes housing terminal block shall be moulded type made of DMC / Fibre glass as per Drg. no. PDS: E-557.

4.17 **63 Amp. Junction Box**

4.17.1 The junction boxes shall be 3 / 4 way dome cover type.

4.17.2 The minimum internal diameter of the box shall be 240 mm.

5.0 SPECIAL FEATURES FOR JUNCTION BOXES FOR HAZARDOUS AREA

5.1 For increased safety junction boxes, the terminals shall be provided with positive locking device against loosening.

All rights reserved

5.2 The enclosure shall be in addition, of increased safety execution, Exe, as per relevant standard and shall be suitable for installation.

5.3 The junction boxes shall be liberally dimensioned in order to avoid temperature rise inside the enclosure which may damage the insulating materials or gaskets employed therein.

5.4 Cables shall enter the terminal box through increased safety compression type cable glands. From the terminal chamber to the main enclosure, the connections shall be made through proper bushings.

5.5 An additional earthing terminal inside the terminal chamber shall be provided.

5.6 The junction boxes shall be provided with Brass-Nickel plated shorted links. The terminal block shall be made of non-hygroscopic compound. Bakelite / Hylam shall not acceptable.

5.7 All screws / bolts and nuts shall be of stainless steel.

5.8 Junction boxes and cable glands must be certified by Statutory Authorities for use in the specified hazardous area. Equipments certified by overseas authorities shall obtain certificate of compliance / letter of opinion from respective statutory authorities.

5.9 Duly wired prototype samples for junction boxes shall be submitted for scrutiny as and when called for.

5.10 Type Test certificates for increased safety type junction boxes and cable glands along with blanking plugs shall be supplied.

6.0 PAINTING

6.1 Epoxy based electrostatic powder coating paint shall be provided on exterior surface while the interior of junction boxes shall be painted with anti-condensate paint. The painting shall be able to withstand corrosive atmosphere.

6.2 Unless otherwise specified, the finishing shade shall be grey having shade no. 632 as per IS-5.

6.3 The terminal block of junction boxes shall be painted with Red, Yellow, Blue & Black colour for phase indication.

7.0 TESTS AND INSPECTION

7.1 The junction boxes shall be routine tested as per relevant standards.

7.2 Additional tests, wherever specified, shall be carried out on one unit of each rating.

7.3 The procedure & extent of the physical checks, routine & type test shall be governed by Quality Assurance Plan mutually agreed and approved by Inspection Authority.

7.4 All the above mentioned tests shall be carried out in the presence of purchaser's representative. In addition, the equipment shall be subjected to stage inspection at works and inspection at site for final acceptance.

7.5 These inspections shall, however, not absolve the vendor from their responsibility for making good any defect which may be noticed subsequently.

All rights reserved

8.0 PACKING

Each junction box and cable gland shall be suitably packed and protected from damage due to transportation, loading and unloading. Threaded fittings shall have plastic caps to protect the threading.

9.0 DRAWINGS AND DOCUMENTS

9.1 Drawings and documents as per Annexure-I shall be supplied, unless otherwise specified.

9.2 All drawings and documents shall have the following descriptions written boldly:

- Name of client
- Name of consultant
- Enquiry / order number with plant / project name
- Motor Code No. and Description

10.0 SPARES

10.1 Spares for operation and maintenance

Item wise unit prices of spare parts with recommended quantity shall be quoted along with the main equipment.

10.2 Commissioning Spares

Commissioning spares, as required, shall be supplied with the main equipment. Item wise list of recommended commissioning spares shall be furnished for approval.

10.3 Any other spare parts not specified, but required, shall also be quoted along with the offer.

10.4 All spare parts shall be identical to the parts used in the equipment.

11.0 DEVIATIONS

11.1 Deviations, if any, from this standard shall be clearly indicated in the offer with reasoning.

All rights reserved

ANNEXURE - I

DOCUMENTATION FOR JUNCTION BOXES

Sl. No.	Document Description	Documents Required (Y / N)		
		With Bid	For Approval	Final
1.	Specification Sheet, duly completed	Y	Y	Y
2.	Technical Particulars, duly filled-in	Y	Y	Y
3.	Certified dimensional drawing, including mounting details	Y	Y	Y
4.	Drawing showing constructional details	Y	Y	Y
5.	Illustrative and Descriptive catalogues	Y	N	Y
6.	Spare parts list	Y	N	Y
7.	FLP/Exe certificates for junction boxes and terminals conforming to IEC/ISS (CMRI, CCE, DGFASLI and BARC for terminals)	Y	N	Y
8.	Certificate for weather proof construction for junction boxes as per IPW-55	Y	N	Y

Note:

1. 4 hard copies & 1 soft copy shall be supplied with bid.
2. 4 hard copies & 1 soft copy shall be supplied for approval after order within 4 weeks from the date of LOI.
3. 8 hard copies & 2 soft copies in pen drive shall be submitted as final documents prior to despatch of the equipment. These shall be made in sets and supplied in fine plastic coated folder.

Y - Yes, N - No

All rights reserved

TECHNICAL SPECIFICATION

SOFT STARTER

All rights reserved

CONTENTS

All rights reserved

1.0 GENERAL

1.1 Scope

This specification covers the general requirements for design, manufacture, assembly, inspection and testing at the vendor's works of high voltage indoor soft starters above 1100V grade.

1.2 Data sheet

Along with the offer, Bidder shall submit the data sheet.

1.3 Codes and standards

The design, manufacture, testing and performance of soft starter panel shall comply with all current statutes, regulations and safety codes in the locality where the equipment will be installed.

Unless otherwise specified, the soft starter shall confirm to the relevant Indian, IEC or British Standards. Nothing in this specification shall be construed to relieve the vendor of his responsibility. The relevant Standards are:

1.	IS: 2705 (1992)	Current Transformers. (Part - I to IV)
2.	IS: 3156 (1992)	Voltage Transformers. (Part - I to IV)
3.	IS: 1248 (1993)	Direct acting indicating analogue electrical measuring instruments and their accessories. (Part - I to IV)
4.	IS: 13703 (1993)	Low Voltage fuses for voltages not exceeding 1000V Ac. (Part - I and II)
5.	IS: 5578 (1985)	Guide for marking of insulated conductors.
6.	IS: 11353 (1985)	Guide for uniform system of marking and identification of conductors and apparatus terminals.
7.	IS: 694 (1990)	PVC insulated cables for working voltage upto and including 1100V.
8.	IS: 6875 (1973)	Control switches for voltages upto and including1000VAC and 1200V DC. (Part - I to IV)
9.	IS: 3700 (1972)	Essential ratings and characteristics of semi-conductor devices.
10.	IS: 4411 (1967)	Codes of designation of semi-conductor devices.
11.	IS: 5469 (1969)	Codes of practice for use of semi-conductor junction devices.
12.	IS: 10482 (1983)	Connectors for printed wiring board.
13.	IS: 12448 (1988)	Basic testing procedures and measuring methods for Electro-mechanical components for electronic equipment.

All rights reserved

14. IS:12970 (1990) Semi-conductor devices – Integrated circuits.

15. IS:13648 (1993) Power electronic capacitors.

16. IEC 297 Dimensions of panels and racks.

17. IEC352 Solderless wrapped connections.

18. IEC 446 Semi-conductor converters.

19. IEEE 444 Protection standards for Thyristor converters.

2.0 GENERAL TECHNICAL REQUIREMENTS

2.1 Design features

(1) The thyristorised starter shall be used for starting of large induction motors.

(2) The soft starter shall give an excellent voltage control during soft starts, smooth steeples acceleration.

(3) The soft starter shall be used during starting for smooth and stepless acceleration only. Once motor gains its full speed bypass vacuum contactor shall be operated to bypass thyristors. The thyristor shall be short time rated (2 min.).

(4) The soft starter drive shall consist of the following.

- Isolation vacuum contactor.
- Bypass vacuum contactor.
- Thyristor unit.
- Motor protective devices.
- Indicating / Metering / Control circuits and accessories.
- Cooling / ventilation equipments / accessories.

(5) Soft starter shall have following minimum in built protection and alarm, but not limited to,

- Electronic over load.
- Line fault.
- Under voltage.
- Over voltage.
- Stall.
- Phase reversal.
- Open gate for thyristor.

All rights reserved

- Over temperature for thyristor.
- Over load for thyristor.

(6) Soft starter panel shall be provided with following indicating, metering and control devices.

Motor starting / protection devices.

Selector switch – Auto / Manual.

Start / Stop push buttons for manual operation.

- Input voltmeter and ammeter.
- Meters to indicate power in MW.
- Current and potential transformers.
- Auxiliary relays.
- Audio-visual alarms / fault indicators.
- Alarm acknowledge / reset / test push buttons.
- Provision for wiring external sequential / process interlock / signals for starting / running / tripping.
- Terminals for remote control / indication.
- Space heater and ventilating fans / cooler, if required.

2.2 **Performance requirement**

Soft starter panel shall be designed for operation at design temperature of 46°C. Vendor shall provide the necessary arrangement within the panel for satisfactory operation of soft starter.

2.3 Construction

(1) Soft starter panel shall be industrial type (Non-hazardous), totally enclosed, dust and vermin proof, floor mounted, free standing cubicle type of construction confirming to the degree of protection as specified in data sheet.

(2) The panel cubicle shall comprise rigidly welded structural frame enclosed completely by sheet steel of minimum 14 SWG (cold rolled) thickness, smooth finished, leveled and free from flaws. All doors and removable covers shall be provided with neoprene gasket all around to make the cubical dust and vermin proof.

(3) The panel shall be provided with bottom sheet steel plates of minimum 2mm thick. Panel shall be fitted with removable gland plates of sufficient thickness at the bottom of the panel for fixing cable glands for power and control cable termination. Sufficient space shall be provided for termination of power cable sizes, as specified in data sheet.

(4) Louvers shall be provided at front, rear, top and bottom of the panel to decipate heat developed inside.

All rights reserved

(5) Degree of protection shall not be less than IP 4X.

(6) Panel shall be fitted with a label and serial number on the front and rear. In addition, panel shall be fitted with a label indicating panel designation and rating. All devices shall be provided with separate labels to indicate the function and also device numbers as marked in wiring diagrams.

(7) Main equipment of the panel shall be accessible for maintenance from the front and rear. All insulating material shall be flame resistant, non-hygroscopic and antitracking.

(8) All hardware's used inside the panel shall be zinc passivated.

3.0 EQUIPMENT SPECIFICATIONS

3.1 HT Fuses

(1) High voltage fuses shall be of HRC link type for the 6.6 KV voltage and shall comply with the requirements of relevant standards.

(2) The fuse link shall have a striker pin for indication and also for trip mechanism.

(3) It is vendor's responsibility to precisely co-ordinate these fuses with contactors and upstream protective devices in the same system and shall be adequately rated for short circuit capacity.

(4) The type of fuse chosen by vendor shall subject to approval by the purchaser. Vendor to furnish fuse prearcing time shall be furnished by along with the offer.

(5) Thyristor units shall be protected by fast acting semiconductor fuses

3.2 Vacuum contactors

(1) Vacuum contactors of adequate rating for the compressor motor starting at 6.6 kV Voltage to match the bypass & isolation application and shall conform to relevant India / IEC standards.

(2) Vacuum contactor shall be provided with properly designed and co-ordinated HRC fuses as mentioned in clause no. 3.1 above.

(3) AC or DC operating coil for the contactor shall be informed to vendor at later stage. This operating coil shall be rated to operate satisfactorily between 80% and 110 % of the rated voltage. The contactor shall not drop out, if the voltage drops to 70% of rated voltage shall make arrangements to derive the auxiliary power, using necessary control transformer, for operating the contactor.

(4) The vacuum contactors shall have exclusively for Purchaser's use minimum 1 NO & 1 NC auxiliary potential free contacts, rated for 10 amps, 240V AC and 0.5 Amp (inductive breaking) 220V DC or as specified and shall be wired upto the terminal blocks.

3.3 Instrument transformers

(1) The current transformers and Voltage transformers shall conform to the requirements stipulated in relevant standards. It shall vendor's responsibility to ensure adequate size of CT & VT

All rights reserved

(2) The CTs & VTs shall be of cast resin type (insulation class "E" or better) and shall be able to withstand the thermal and mechanical stress resulting from the maximum short circuit and momentary current ratings of the switchgear.

(3) CTs shall have polarity mrks on each transformer and at the associated terminal block Facility shall be provided for short-circuit and earthing the CT secondary at the terminal blocks.

(4) VTs shall be protected on the primary side by limiting fused and by MCBs on secondary side with 9kA interrupting ratings.

(5) The MCBs shall have min 1 NO + NC auxiliary potential free contacts, for

annunication and interlocks.

(6) CTs shall withstand specified system fault current for 1 sec.

3.4 **Measuring and recording instruments**

(1) Microprocessor based measuring and recording instruments shall be provided. The unit shall have RS-485 port at the output for serial communication.

(2) These instruments shall be standalone type, shall be configurable and shall be compatible with higher level computer.

(3) The instrument shall be rectangular in shape and not greater than 150mm (W) x 150mm (H). The accuracy class shall be as per IS or international standards.

3.5 **Control wiring and terminals**

(1) Feeders for Control (DC) / Auxiliary supply shall be provided at one point of the panel and voltage level shall be as specified in data sheet. Terminals to receive AC/DC control and auxiliary power shall be provided in cubicle and the terminals shall adequately rated (min. 20A).

(2) Adequate rated 2 pole MCBs shall be provided for each of the AC/DC control circuits.

(3) Internal wiring shall be done with 650V grade PVC insulated, stranded copper conductor of minimum size 2.5mm2 size.

(4) Separate colour coding shall be used for AC / DC control and power circuits and earth wire.

(5) All incoming and outgoing and control wire connection shall be wired to adequately rated (min.20A), elmex type terminal blocks about 20% spare terminals shall be provided in cubicle. All terminals shall be easily accessible.

(6) All wire shall be bunched together and routed through wire ways inside cubicle.

(7) Separate schematics, wiring diagrams and termination schedule for external and internal cable/wire connections shall be furnished by the vendor. External connections shall include Purchaser's remote equipment, which will be furnished by Purchaser to the successful vendor.

(8) Low watt consumption LED type indicating lamps shall be provided.

All rights reserved

(9) All wires, terminals and all other devices shall be provided with appropriate ferrules to correspond with wiring diagrams, for circuit identifications Termination lugs to be provided wherever necessary.

4.0 EARTHING

(1) An earth bus having cross section as specified in data sheet A shall be provided and extended through the length of the panel. All electrical equipment shall be connected to this earth bus.

(2) Suitable clamp type terminals with hardware at each end of the panel shall be provided to suit the size of the OWNER's earthing conductor of size 75 x 10 mm GI

(3) Hinged doors shall be earthed through flexible copper brand of adequate size paint at earthing points shall be removed for proper contact star washers for door earthing are not acceptable.

(4) Bolted joints, splices, taps. etc to the earth bus shall be with at least two bolts

5.0 NAME PLATES AND RATING PLATES

5.1 Name plate

(1) Nameplate with engraved letters shall be provided for both front and rear side of panel function of every instrument, relay fuse etc shall be indicated by labels fixed near each device.

(2) Non-corrosive name plates shall be manufactured in anodized aluminium sheet and the letters shall be engraved on black lettering on white background. The name plates/labels shall be held in position by self-tapping screws.

(3) All devices mounted inside the cubicle and instruments etc., shall be identified by marking the device numbers inside cubicle as per the wiring drawing.

5.2 Rating plates

(1) The panel shall have a rating plate fixed to the non-removable part of the enclosure.

(2) All electrical equipment like VTs, CTs, etc and all other electrical devices shall be provided with rating plate made of stainless steel which can be easily seen.

(3) The rating plates shall give all the relevant information as specified in relevant standards.

(4) Danger boards, caution boards, operating instruction plates, shall be fixed to panel as per the standard engineering practice and regulations.

6.0 ACCESSORIES

6.1 Heater

Soft starter panel shall be equipped with space heaters to prevent moisture condensation within the enclosure and shall be suitable for continuous operation on 240V, 1 phase, 50 Hz AC supply. The space heaters shall be controlled through thermostats. Supply for motor space heater shall be brought to separate terminals in respective cubicle.

All rights reserved

6.2 **Cooling**

Soft starter panel shall be provided with necessary ventilation / cooling equipment's for smooth operation of soft starter at given design temperature.

6.3 **Plug Point**

A 240V, 1 phase, 50Hz AC plug point shall be provided in the interior of each cubicle with an on-off switch.

7.0 PAINTING

(1) Oil grease, dirt and rust from the sheet steelwork shall be thoroughly Cleaned and removed. Rust and scale shall be removes by picking process with dilute acid and alkaline solution. Phospating and thorough rinsing with clear water followed by final rinsing with dilute dichromate solution and oven drying shall follow this.

(2) The under surface shall he prepared by applying a coat of phosphate paint and coat of yellow zinc chromote primer. The under surface shall be made free from all imperfections before under taking the finishing coat.

(3) After application of Primer, two coats of finish epoxy paint shall be applied with each coat followed be stowing. The colour shade for the finish paint shall be shade 631 (Light Gray) as per IS 5, unless otherwise specified.

8.0 INSPECTION AND TESTS

(1) Routine tests shall be carried out at works in the presence of OWNER/PMC/ CONTRACTOR/Third party inspector as per relevant IS / IEC Standards.

(2) Vendor shall furnish type and routine test certificates for all bought out components for the panel, as per relevant standards.

(3) Test certificates for type test carried out on similar equipment of identical design, if available, shall be submitted along with the offer.

9.0 INFORMATION REQUIRED BY PURCHASER FROM THE BIDDER

The vendor shall submit with his offer following information: -

(1) Full technical description and performance details of the equipment accessories and components offered including heat losses for all components in kW.

(2) Overall dimensions and shipping dimensions and weight.

(3) Deviation taken by the vendor from the requirements of this specification.

(4) Guaranteed technical particulars.

(5) Man-day rates for commissioning supervision.

10.0 MISCELLANEOUS

Each panel shall be provided with the following

All rights reserved

(1) Two sets of clearly identifiable key for all panel-locking devices.

(2) Complete set of special tools and equipment for installation maintenance and testing of each panel.

All rights reserved

पी डी आई एल PDIL	TYPICAL FOUNDATION ARRANGEMENT FOR PANELS IN SUB-STATION	PDS: E 119	0
		DOCUMENT NO.	REV.
		SHEET 1 OF 1	

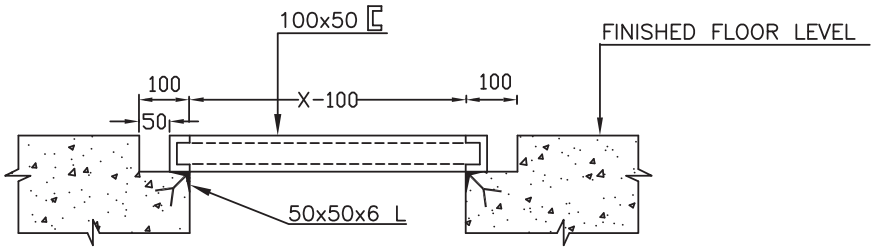

SECTION-A A

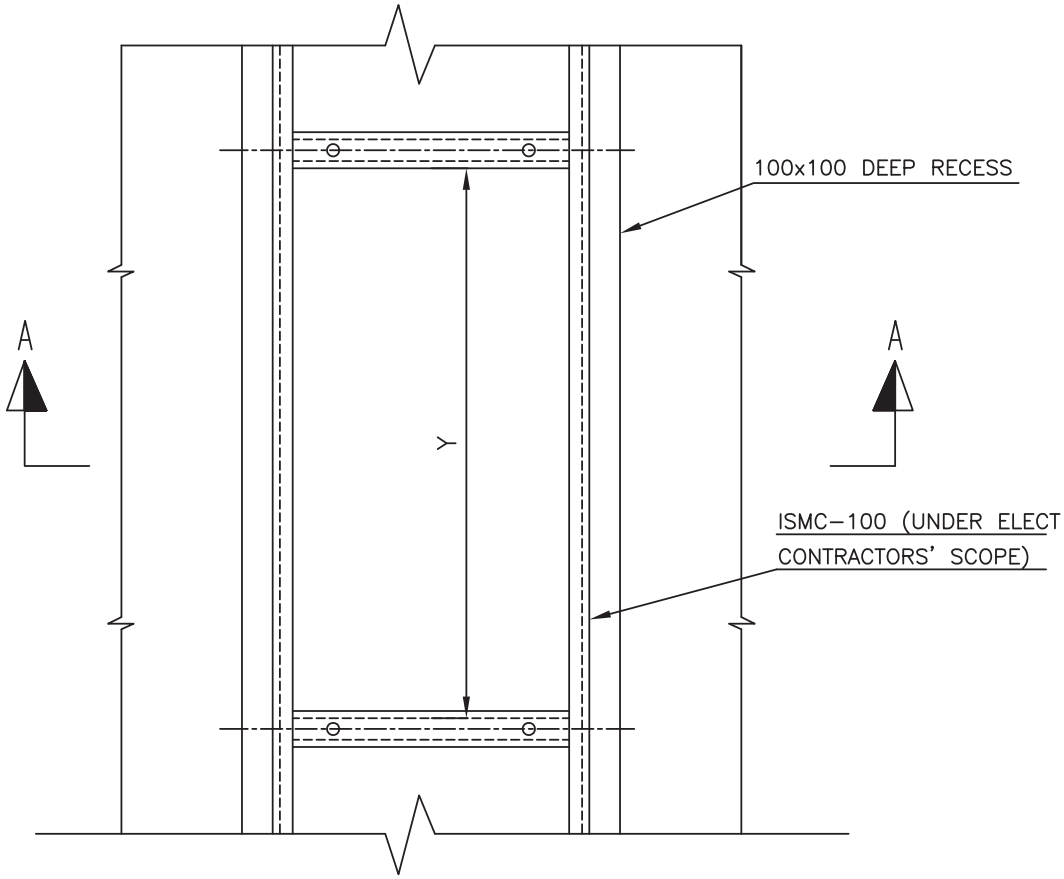

PLAN

X- DEPTH OF PANEL

Y- LENGTH OF TWO PANELS

NOTES:-

1. THIS ARRANGEMENT SHALL BE APPLICABLE FOR M.C.C., DISTRIBUTION BOARDS, CONTROL PANELS ETC.
2. PANELS AFTER ERECTION SHALL BE TAG WELDED TO FOUNDATION CHANNELS

पी डी आई एल PDIL	TYPICAL FOUNDATION DETAILS FOR HT/LT CIRCUIT BREAKER PANELS	PDS: E 120	0
		DOCUMENT NO.	REV.
		SHEET 1 OF 1	

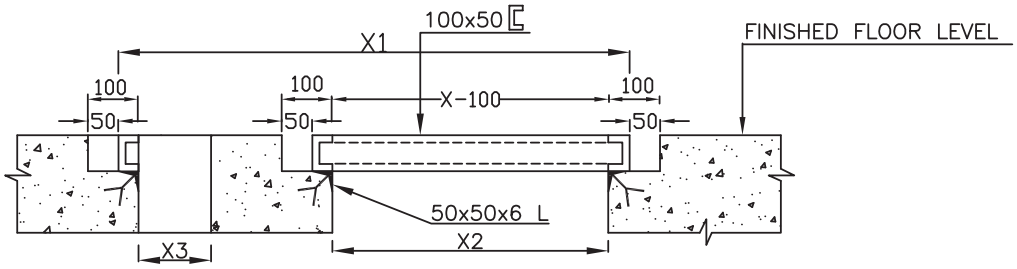

SECTION–A A

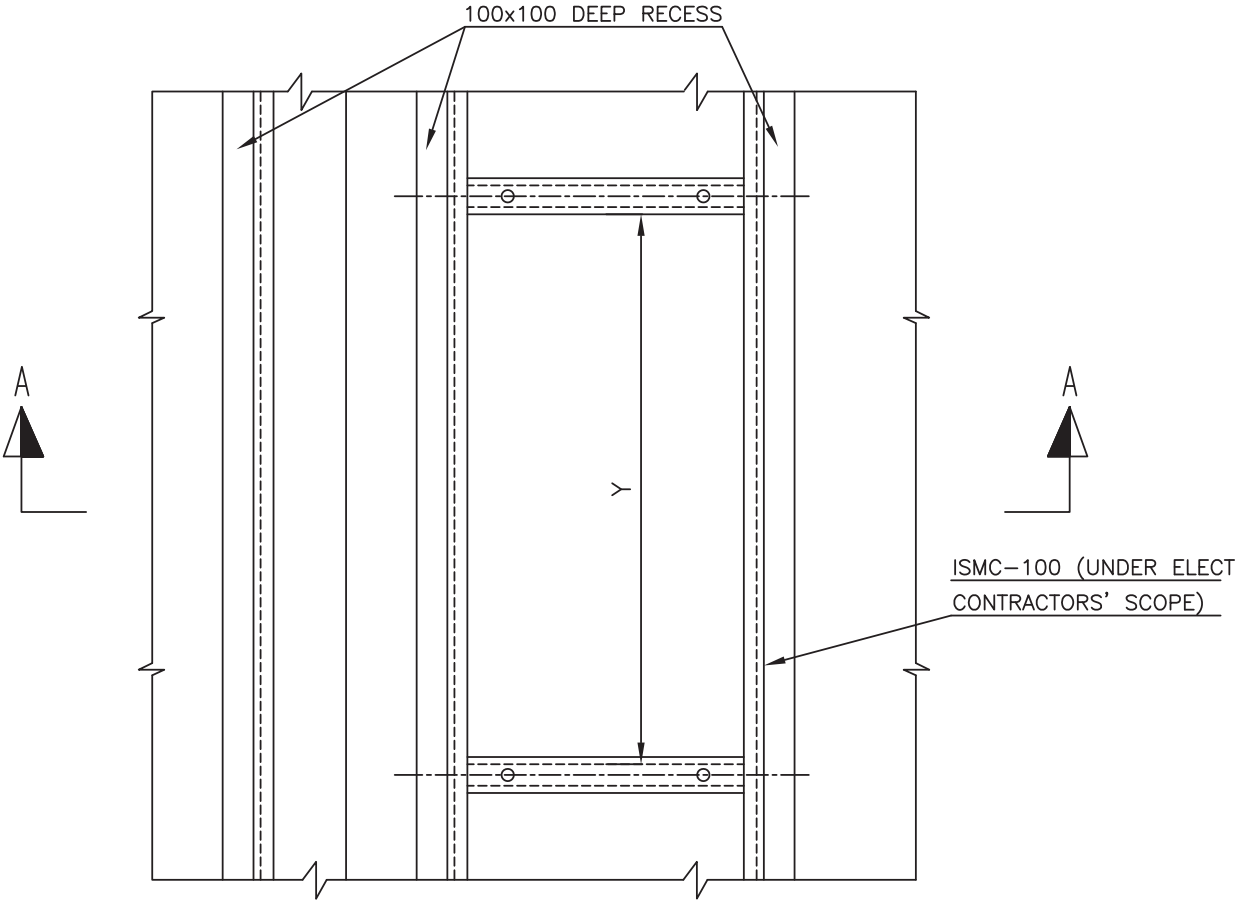

X1 = DEPTH OF PANEL
X2 = FOOR OPENING
X3 = FOOR OPENING
Y = LENGTH OF PANEL

PLAN

NOTES:–

1. PANELS AFTER ERECTION SHALL BE BOLTED TO FOUNDATION CHANNELS
2. POWER & CONTROL CABLES SHALL ENTER THROUGH OPENING X2
3. DEPENDING UPON THE FINAL DATA FROM THE VENDOR, ONLY TWO CHANNELS MAY BE NECESSARY IN WHICH CASE THE 3RD. RECESS SHALL BE FILLED AT SITE.

पी डी आई एल PDIL	FIXING ARRANGEMENT OF AIR OBSTRUCTION LIGHT (FOR GLC TYPE LAMP)	PDS: E 201	1
		DOCUMENT NO.	REV
		SHEET 1 OF 2	

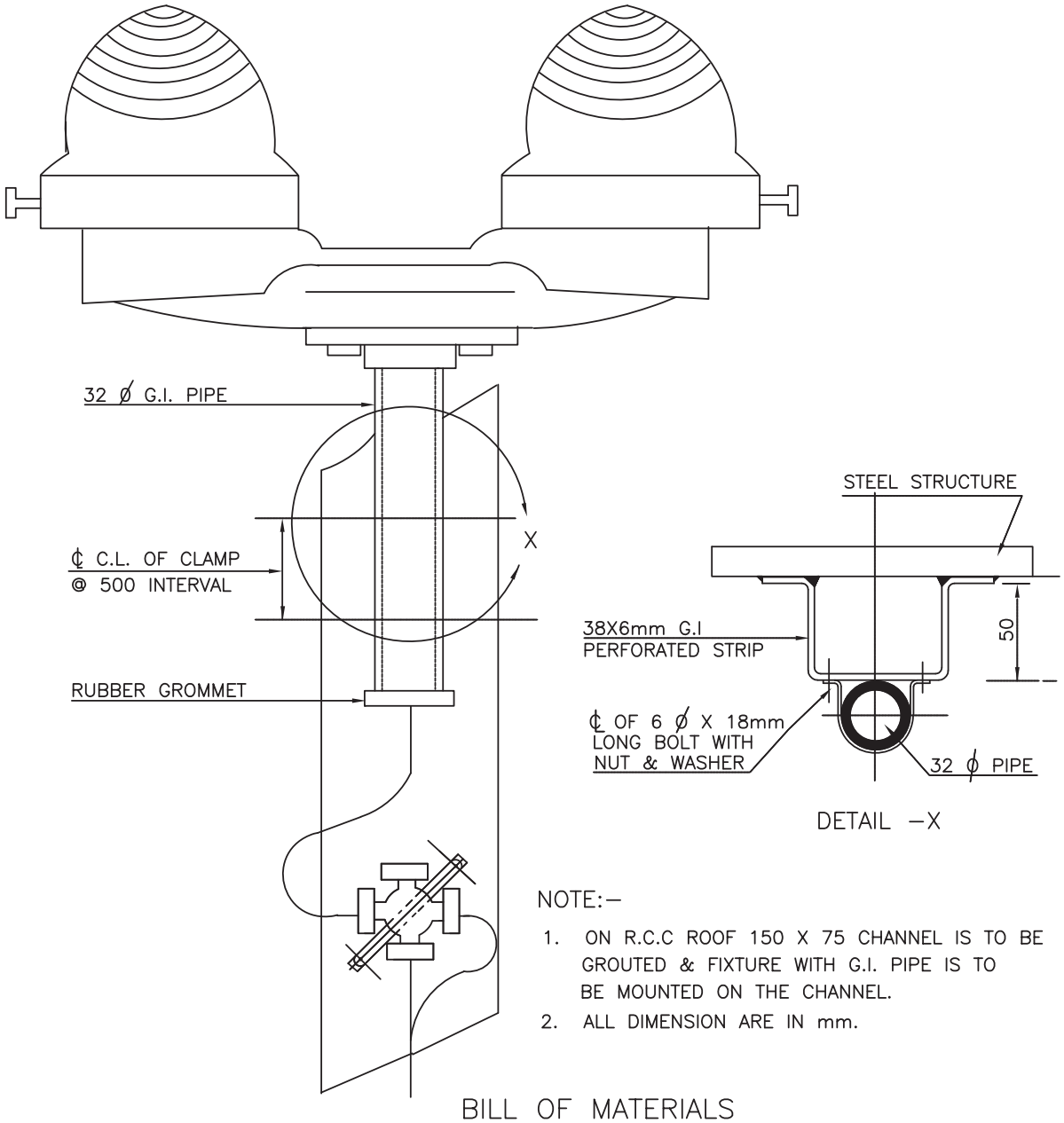

NOTE:–

1. ON R.C.C ROOF 150 X 75 CHANNEL IS TO BE GROUTED & FIXTURE WITH G.I. PIPE IS TO BE MOUNTED ON THE CHANNEL.
2. ALL DIMENSION ARE IN mm.

BILL OF MATERIALS

SL.NO.	ITEMS	QTY..
1	32 ϕ G.I. PIPE –750 LENGTH	1 NO.
2	38 X 6mm G.I. PERFORATED STRIP 250mm LONG	2 NOS.
3	RUBBER GROMMET–32mm ϕ	1 NO.
4	38 X 6mm M.S. PERFORTED STRIP 100mm. LONG	2 NOS.
5	6ø x 18mm LONG BOLT	4 NOS.

पी डी आई एल PDIL	FIXING ARRANGEMENT OF AIR OBSTRUCTION LIGHT (FOR LED TYPE AND NEON SPIRAL TYPE LAMP)	PDS: E 201	1
		DOCUMENT NO.	REV
		SHEET 2 OF 2	

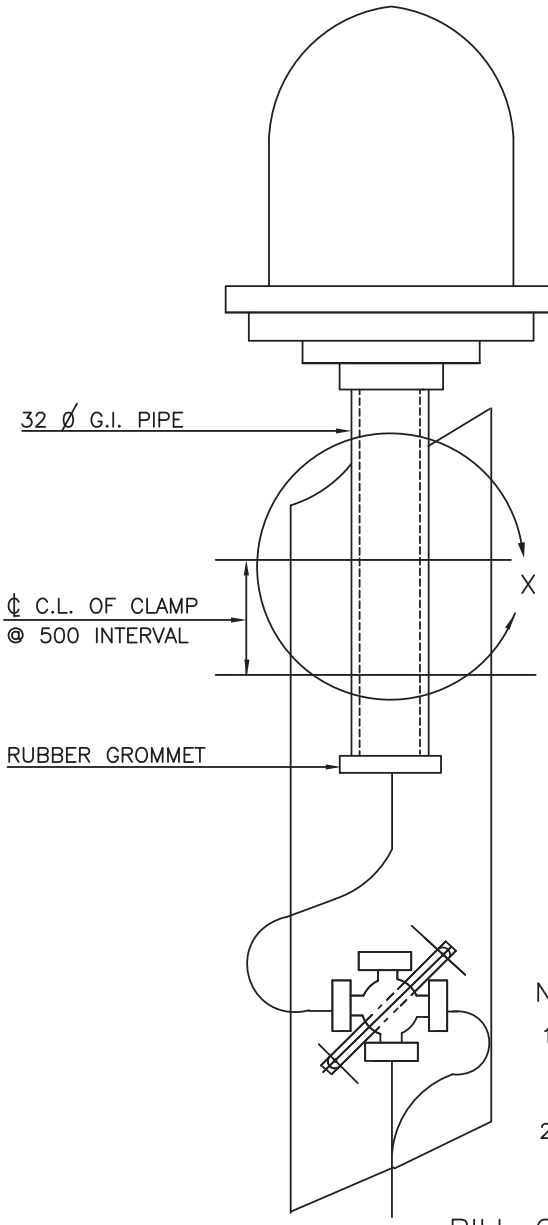

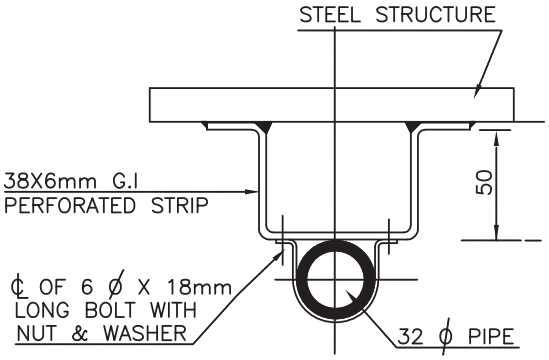

DETAIL –X

NOTE:–

1. ON R.C.C ROOF 150 X 75 CHANNEL IS TO BE GROUTED & FIXTURE WITH G.I. PIPE IS TO BE MOUNTED ON THE CHANNEL.
2. ALL DIMENSION ARE IN mm.

BILL OF MATERIALS

SL.NO.	ITEMS	QTY..
1	32ø G.I. PIPE –750 LENGTH	1 NO.
2	38 X 6mm G.I. PERFORATED STRIP 250mm LONG	2 NOS.
3	RUBBER GROMMET–32mmø	1 NO.
4	38 X 6mm M.S. PERFORTED STRIP 100mm. LONG	2 NOS.
5	6ø x 18mm LONG BOLT	4 NOS.

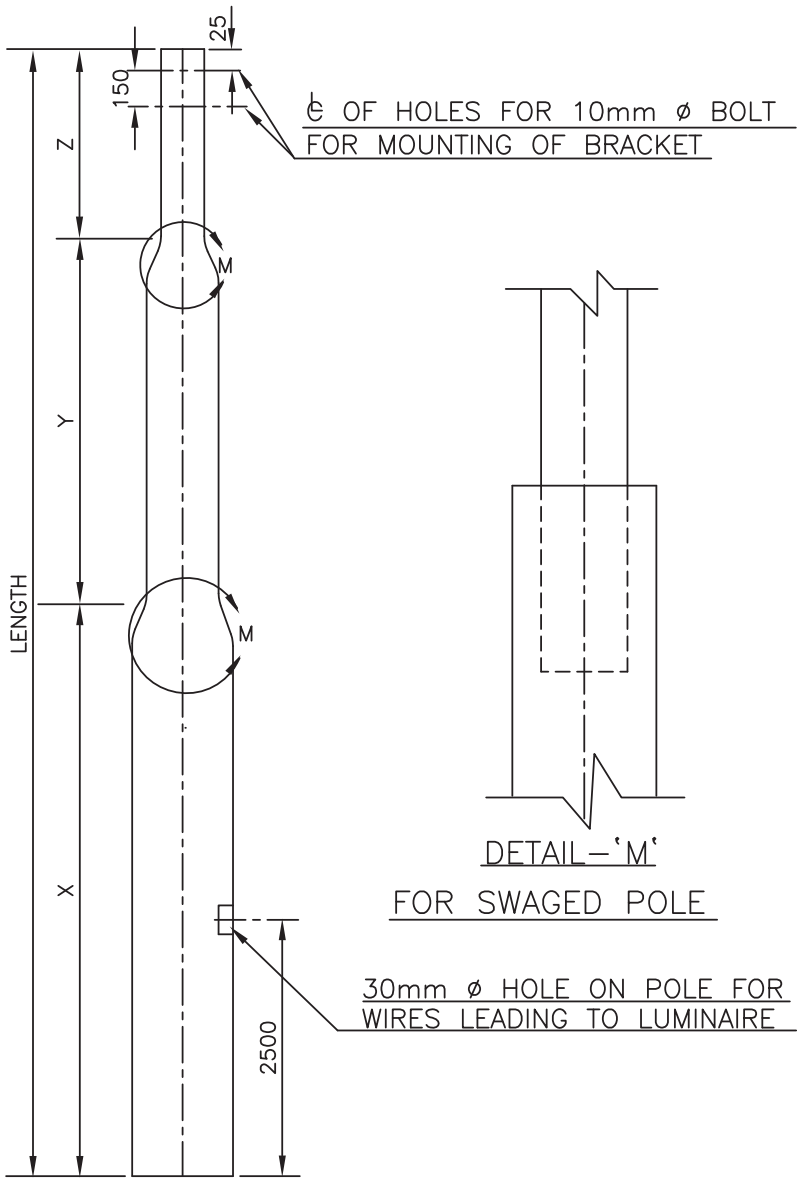

POLE DESIGNATION	LENGTH(M) X+Y+Z=L	PLANTING DEPTH(M)	DIAxTHICKNESS BOTTOM(mm)	DIA MIDDLE(mm)	DIA TOP(mm)	WEIGHT OF POLE (Kg)
410 TP3/SP3	X+Y+Z=7	1.25	114.3x4		78.1	87/85
410 TP12/SP12	X+Y+Z=8	1.5	114.3x4		78.1	101/97
410 TP13/SP13	X+Y+Z=8	1.5	139.7x4		88.9	125/119
410 TP27/SP27	X+Y+Z=9	1.5	114.3x4		76.1	113/108
410 TP30/SP30	X+Y+Z=9	1.5	139.7x4		88.9	140/133
410 TP33/SP33	X+Y+Z=9	1.5	165.1x4		114.3	170/184

NOTE:–

1. TP REFER TO STEPPED POLE.
2. SP REFER TO SWAGED POLE.
3. POLE DESIGNATION IS AS PER IS: 1239

SWAGED POLE TYPE 'B'

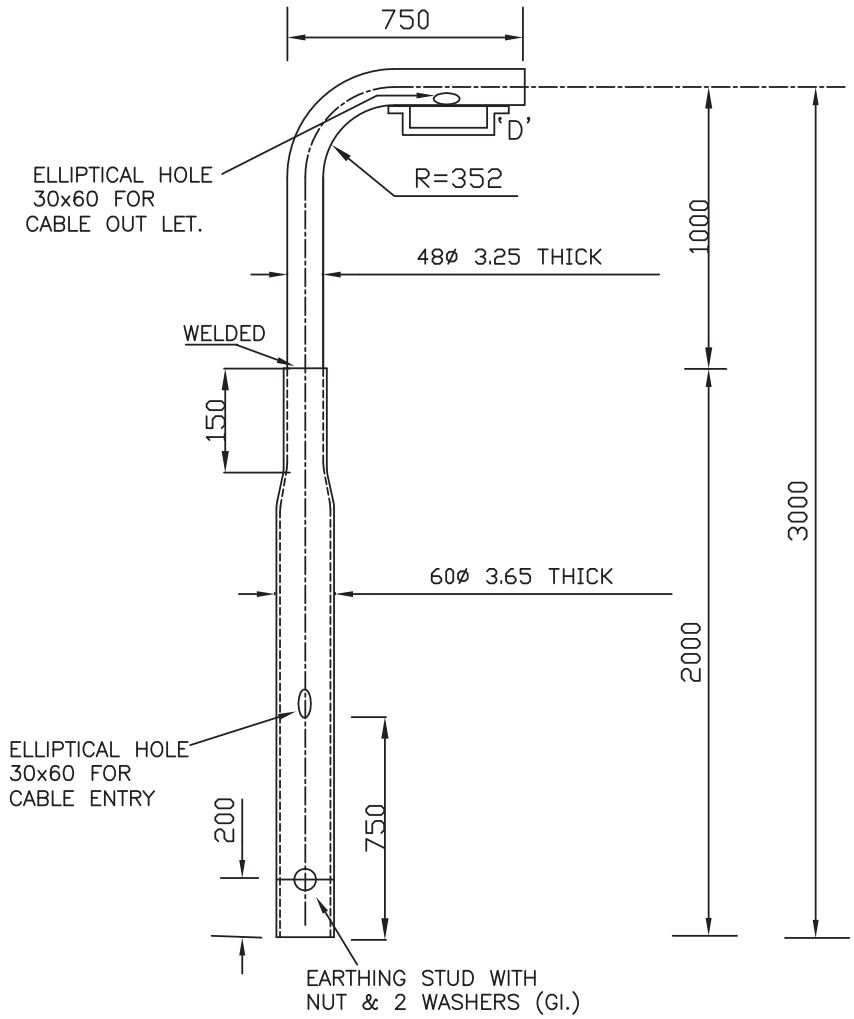

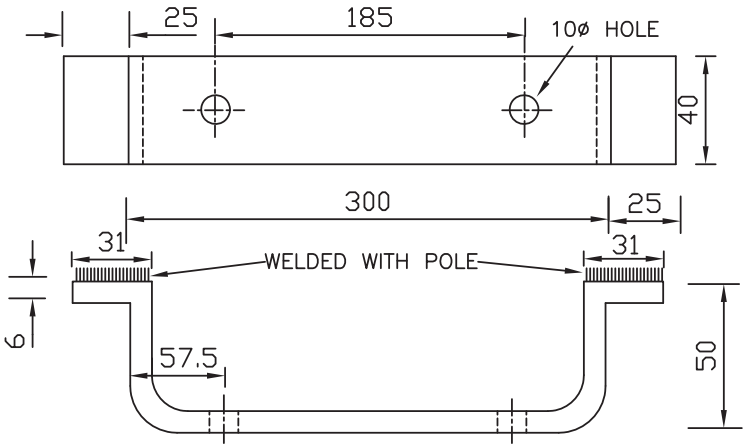

DETAIL–D

NOTE:–

1. ALL DIMENSIONS ARE IN mm

SWAGED POLE TYPE 'C'
(FOR PLANT GROUND MOUNTING)

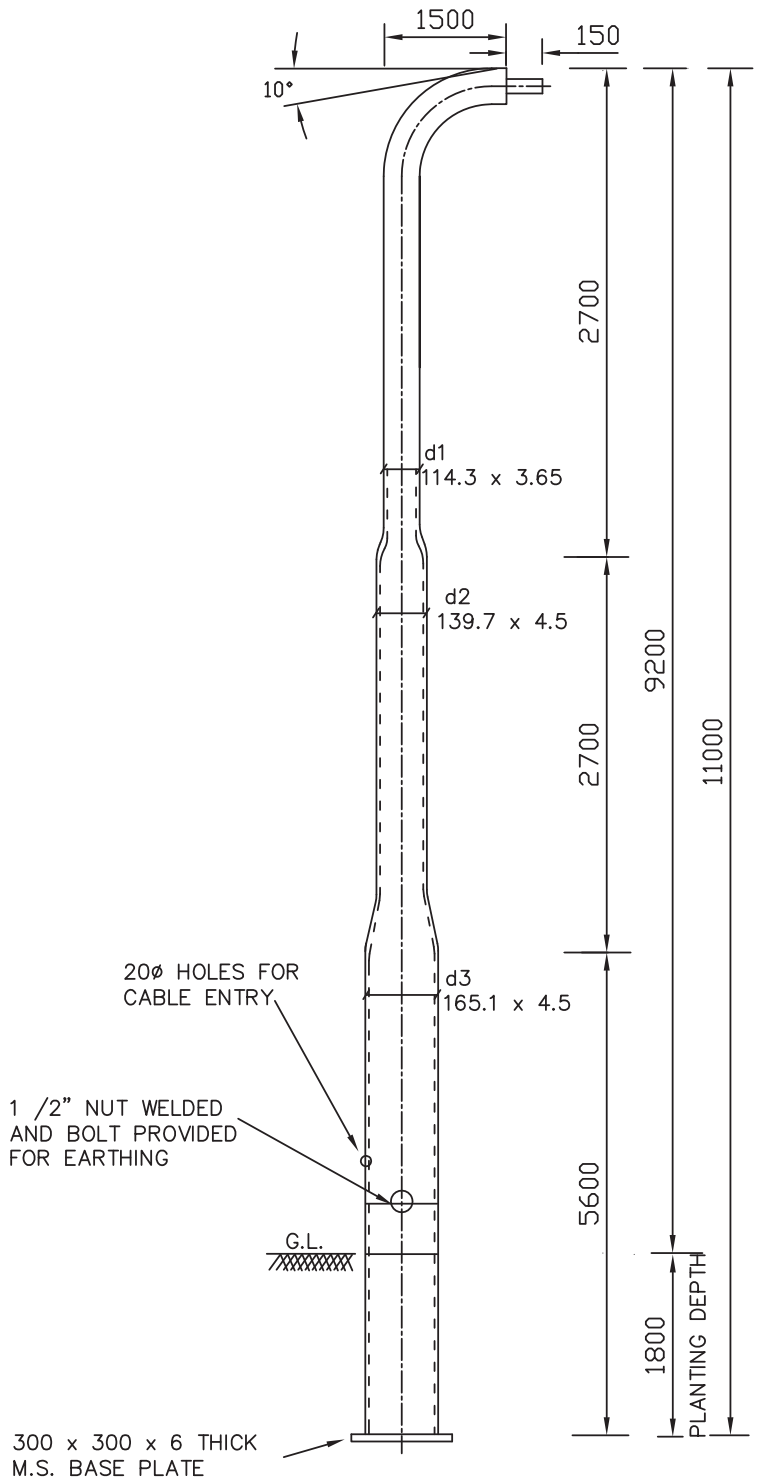

NOTES: –

1. NIPPLE OF DIA. 45 (NIPPLE TO BE PREPd. BY DIRECT REDUCTION OF DIA OF TOP PIPE WITHOUT USE OF ANY WASHER)
2. POLE MATERIAL MS AS PER IS 1239 ABOVE GROUND PORTION TO BE PAINTE 2 COATS OF RED OXIDE PRIMER,UNDER GROUND PORTION PAINTED BITUMINUS PAINT.
3. FOR FLOOD LIGHTING POLE THE TOP PORTION NOT TO BE TILTED BUT A 300 x 300 x 6mm THICK M.S. PLATE WELDED AT THE TOP SHALL BE PROVIDED TO MOUNT FLOOD LIGHT.
4. ALL DIMENSIONS ARE IN mm

पी डी आई एल PDIL	INSTALLATION OF ELECTRICAL POLES	PDS: E 204	0
		DOCUMENT NO.	REV.
		SHEET 1 OF 1	

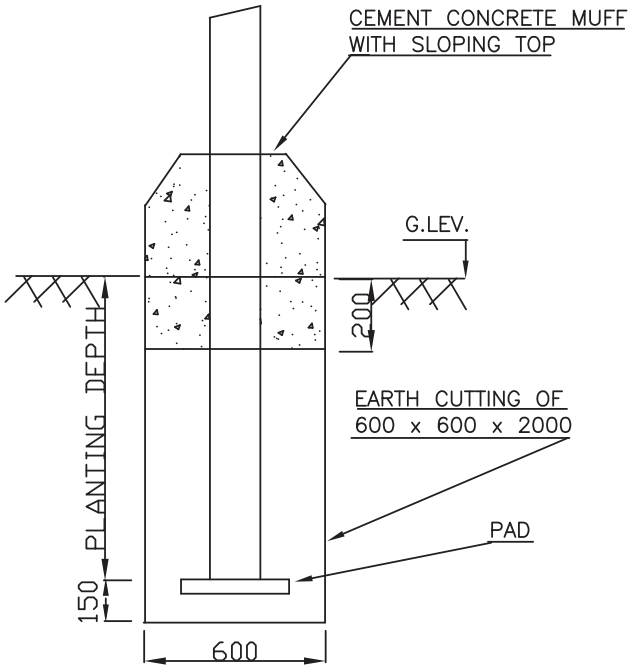

1. FOR PAD USE:–

a) 400x400x70 CONCRETE BLOCK FOR POLES.

b) BASE PLATE AS SHOWN IN PDS:E 205 FOR STEEL TUBULAR POLES SHALL BE USED AS PAD

C) RCC / WOOD POLES DO NOT NEED ANY PAD.

2. MUFF IS MUST FOR STEEL TUBULAR POLES AND OPTIONAL FOR OTHERS POLES, MUFF SHALL BE PROVIDED AFTER UNDER GROUND CABLING FOR STREET LIGHTING IS COMPLETED.

3. MUFF HEIGHT FROM GROUND LEVEL SHALL BE 300mm FOR ORDINARY POLES AND 457mm FOR STREET LIGHTING POLES HAVING J.B.LOCATED ON THE MUFF

4. FOR MOUNTING OF JBS' ON THE MUFF REFER PDS:E 209

5. FOR PLANTING DEPTH REFER RELEVANT ISS.

6. ALL DIMENSIONS ARE IN mm

पी डी आई एल PDIL	INSTALLATION ARRANGEMENT STREET LIGHTING FIXTURES	PDS: E 206	0
		DOCUMENT NO.	REV.
		SHEET 1 OF 1	

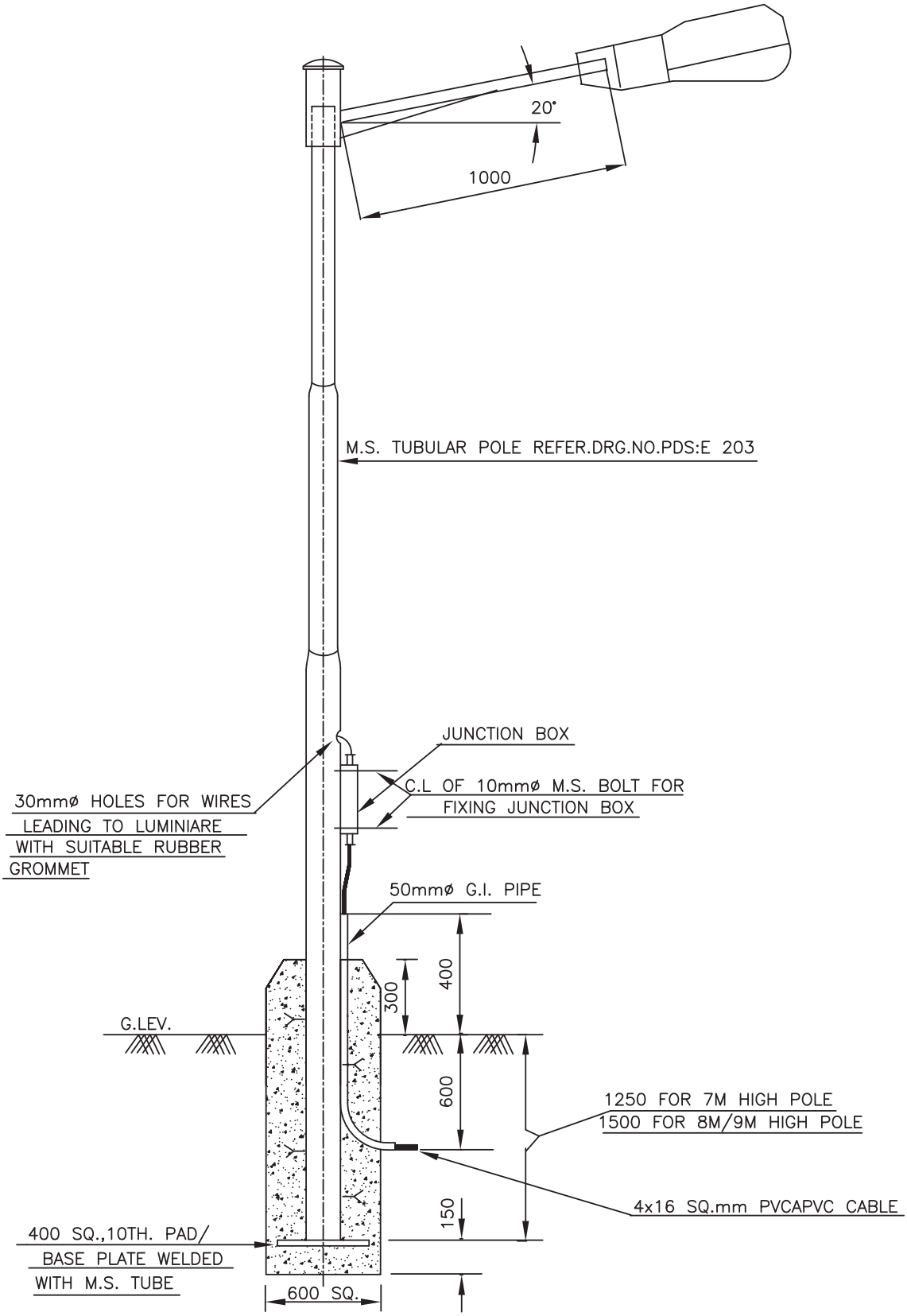

NOTE :–
ALL DIMENSIONS ARE IN mm.

पी डी आई एल PDIL	DETAILS OF BRACKET ARM FOR STREET LIGHTING POLE	PDS: E 207	0
		DOCUMENT NO.	REV.
		SHEET 1 OF 1	

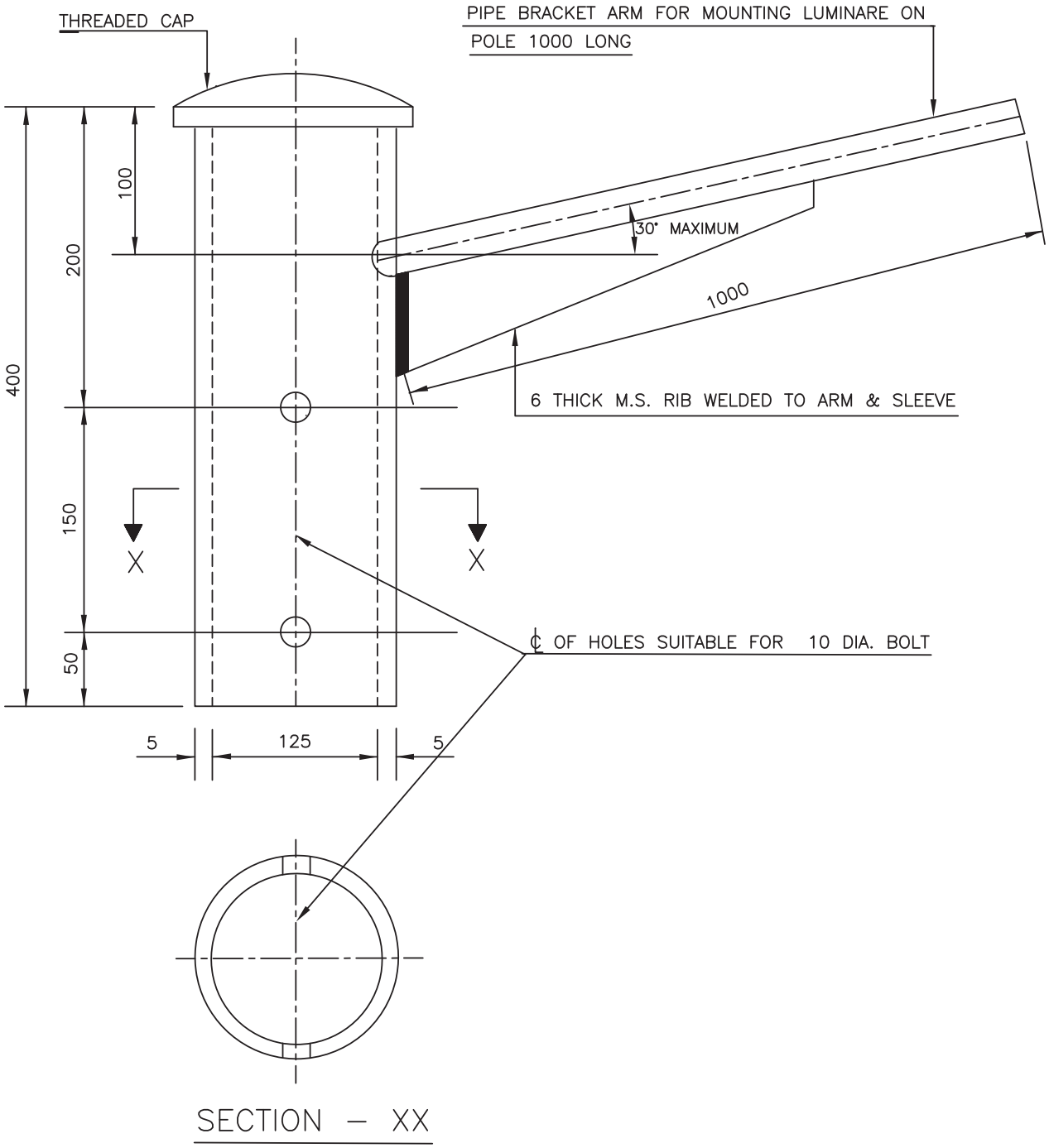

NOTES:–

1. SIZE OF PIPE SHALL BE 30mm FOR TL/80W HPL FIXTURES, 40mm FOR 70W SON/125W HPL FIXTURES AND 50mm FOR 150W SON/250W HPL FIXTURES.
2. ALL DIMENSIONS ARE IN mm.

पी डी आई एल PDIL	INSTALLATION ARRANGEMENT AREA LIGHTING FIXTURES	PDS: E 208	0
		DOCUMENT NO.	REV.
		SHEET 1 OF 1	

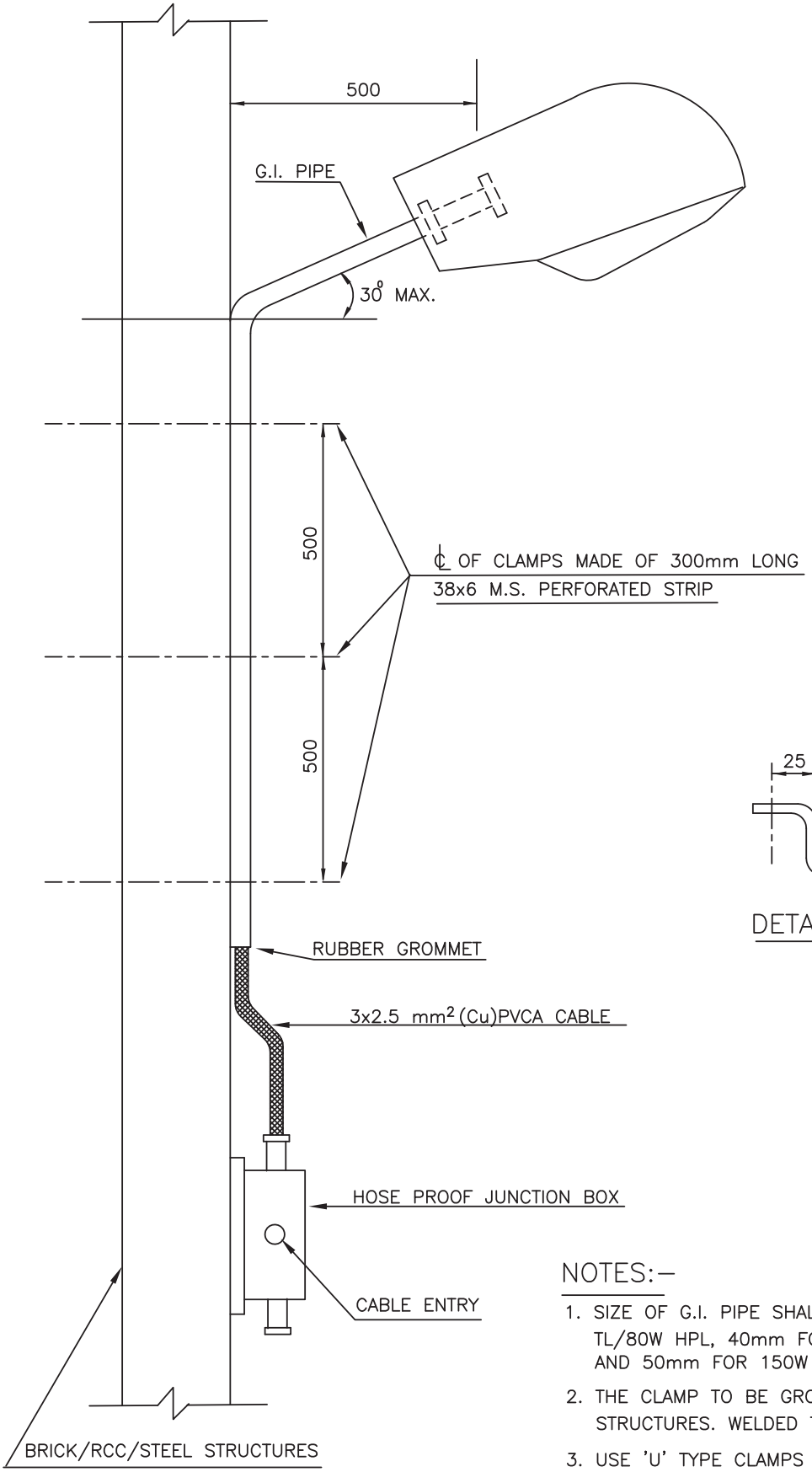

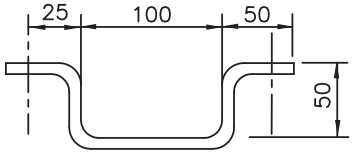

DETAILS OF CLAMP

NOTES:–

1. SIZE OF G.I. PIPE SHALL BE 30mm FOR TL/80W HPL, 40mm FOR 70W SON/125W HPL AND 50mm FOR 150W SON//250W HPL FIXTURES.
2. THE CLAMP TO BE GROUTED IN BRICK WALL/RCC STRUCTURES. WELDED TO STEEL STRUCTURES.
3. USE 'U' TYPE CLAMPS FOR RAILING.
4. ALL DIMENSIONS ARE IN mm.

पी डी आई एल PDIL	JUNCTION BOX FOR STREET LIGHTING POLE	PDS: E 210	0
		DOCUMENT NO.	REV.
		SHEET 1 OF 1	

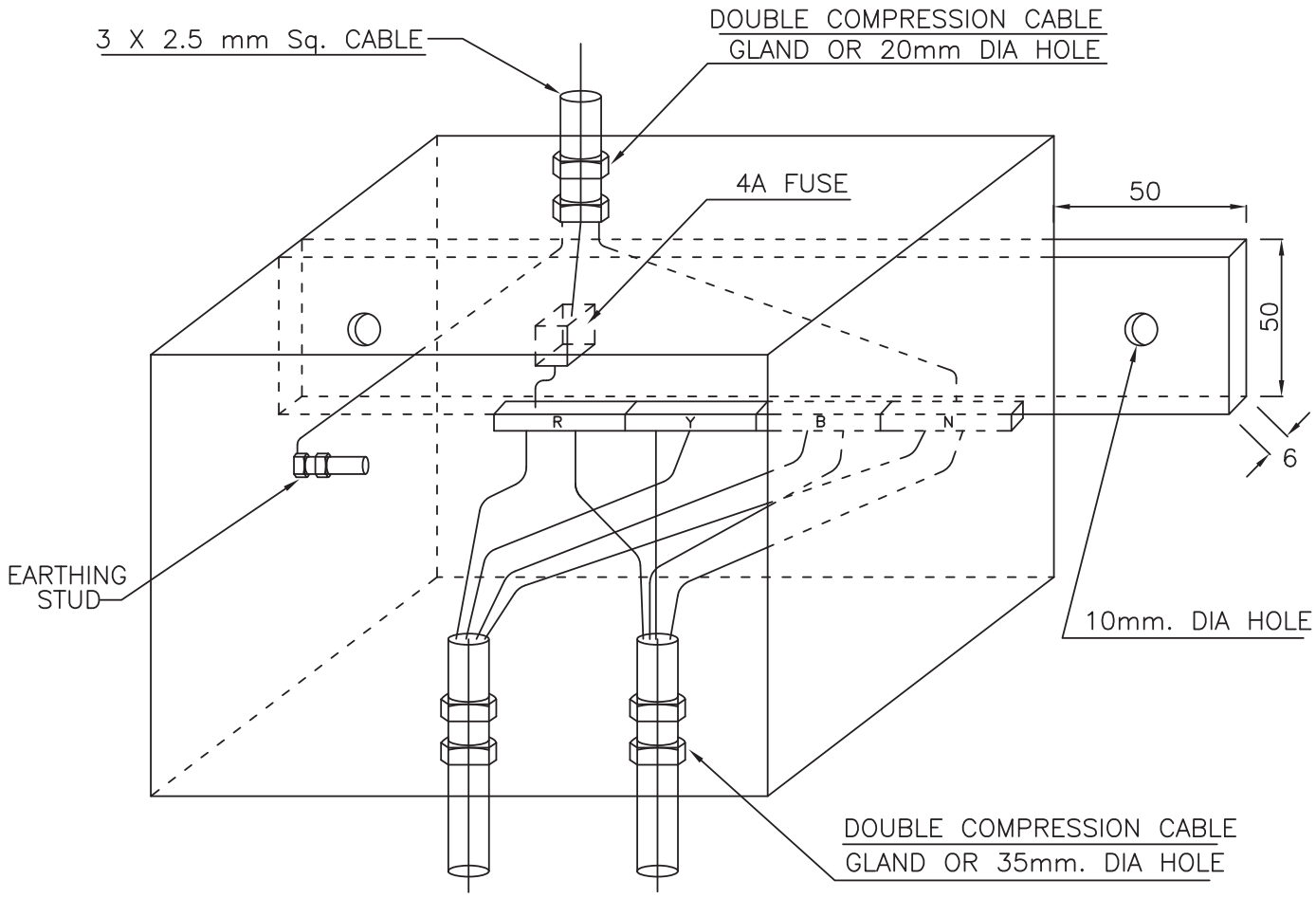

NOTE:–

1. THE MINIMUM INTERNAL DIMENSION OF THE J.B. SHALL BE 152 X 152 X 152.
2. THE FRONT DOOR SHALL BE HINGED & LOCKABLE TYPE.
3. THE CONNECTION OF FUSE TO THE PHASE 'R' IS TYPICAL ONE THE EXACT PHASE TO WHICH CONNECTION SHALL BE MADE SHALL BE DECIDED AT SITE.
4. FOR HAZARDOUS AREA'S THESE JUNCTION BOXES SHALL BE INCREASED SAFETY TYPE AND THE FUSE NEED NOT BE PROVIDED.
5. FOR POLE MOUNTED JUNCTION BOXED THE CABLE GLAND SHALL BE SIDE MOUNTED.
6. ALL DIMENSIONS ARE IN mm.

पी डी आई एल PDIL	INSTALLATION OF JUNCTION BOX IN THE POLE FOR STREET LIGHTING POLE	PDS: E 211	1
		DOCUMENT NO.	REV
		SHEET 1 OF 1	

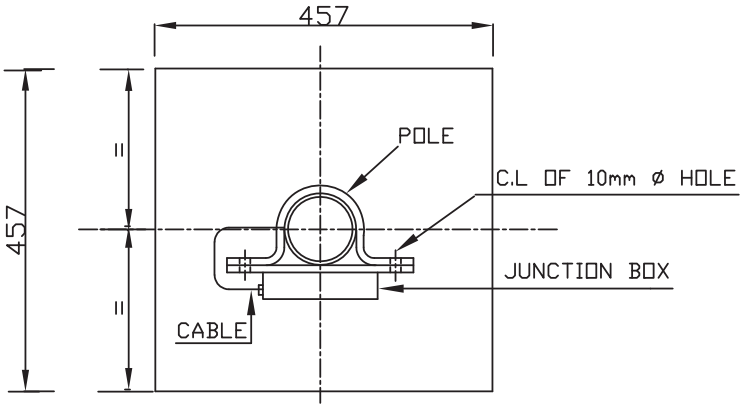

PLAN

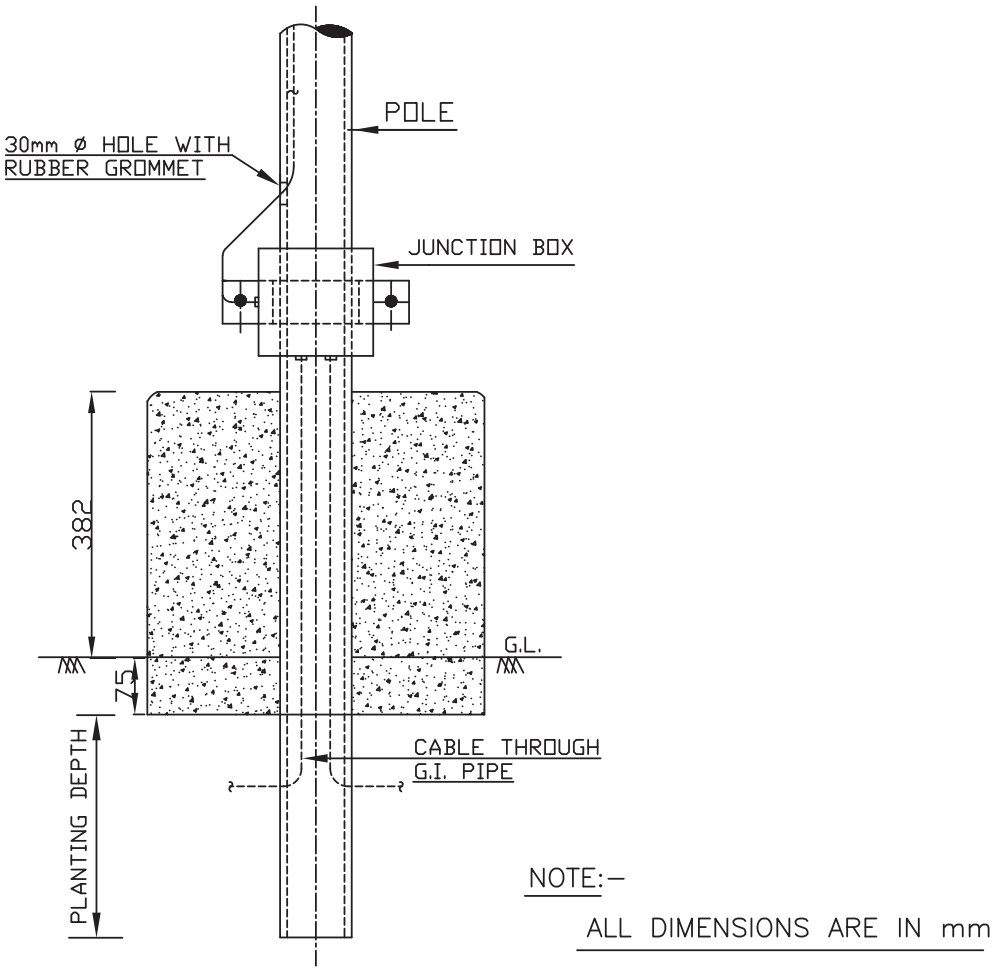

NOTE:–

ALL DIMENSIONS ARE IN mm

ELEVATION

पी डी आई एल PDIL	TYPICAL INSTALLATION OF LIGHTING FIXTURE AT GROUND LEVEL	PDS: E 212	0
		DOCUMENT NO.	REV.
		SHEET 1 OF 2	

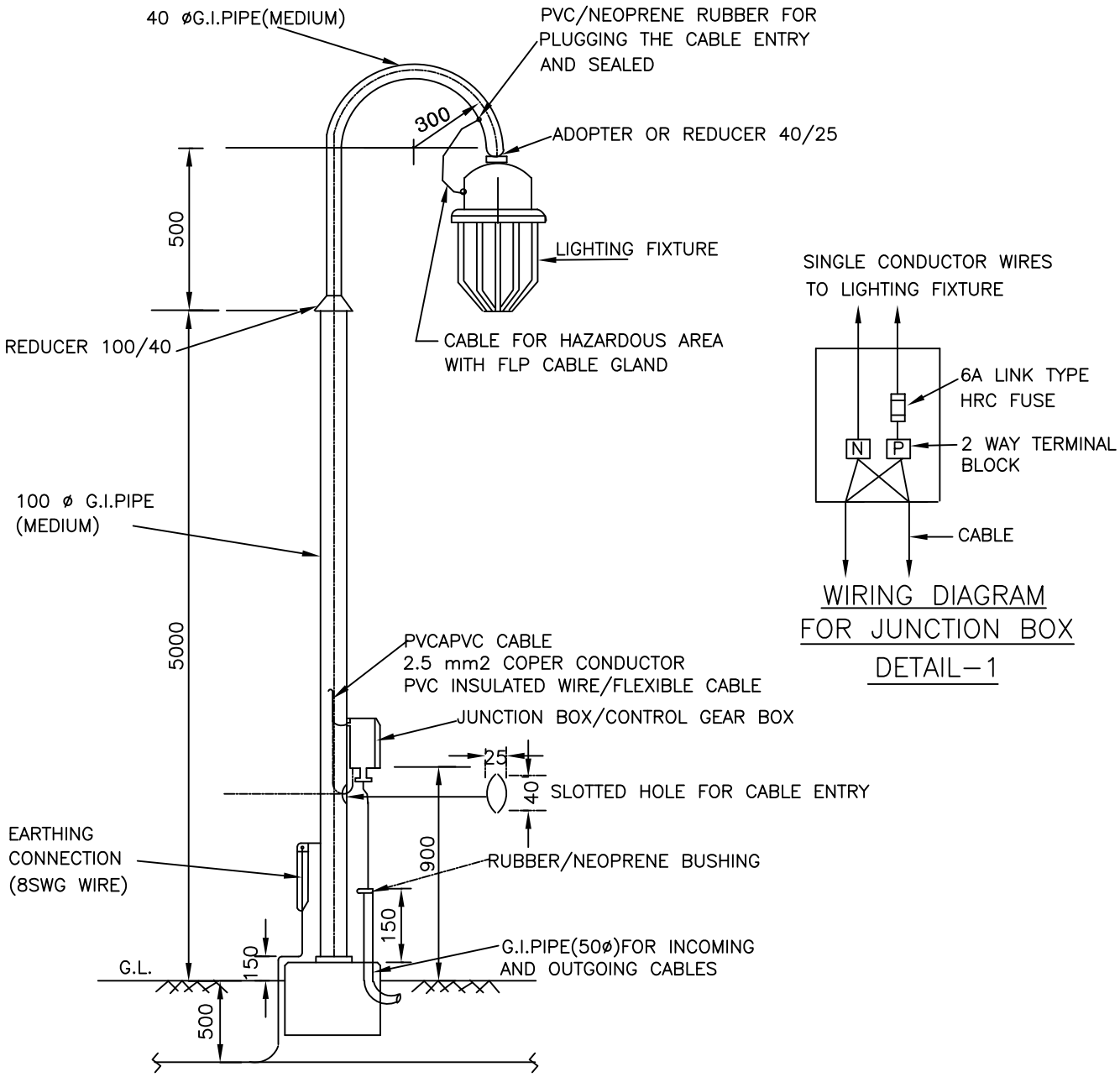

NOTE :–

1. TYPE OF FIXTURE USED SHALL BE INDICATED ON LAYOUT DRAWINGS.
2. IN HAZARDOUS AREAS 3/4 WAY FLP OR DIV 2 JUNCTION BOXES(WITHOUT FUSE) SHALL BE USED AS REQD. IN SAFE AREA JUNCTION BOX AS PER DETAIL–1 SHALL BE PROVIDED.
3. ALL DIMENSIONS ARE IN mm.

पी डी आई एल PDIL	TYPICAL INSTALLATION OF LIGHTING FIXTURE AT GROUND LEVEL	PDS: E 212	0
		DOCUMENT NO.	REV
		SHEET 2 OF 2	

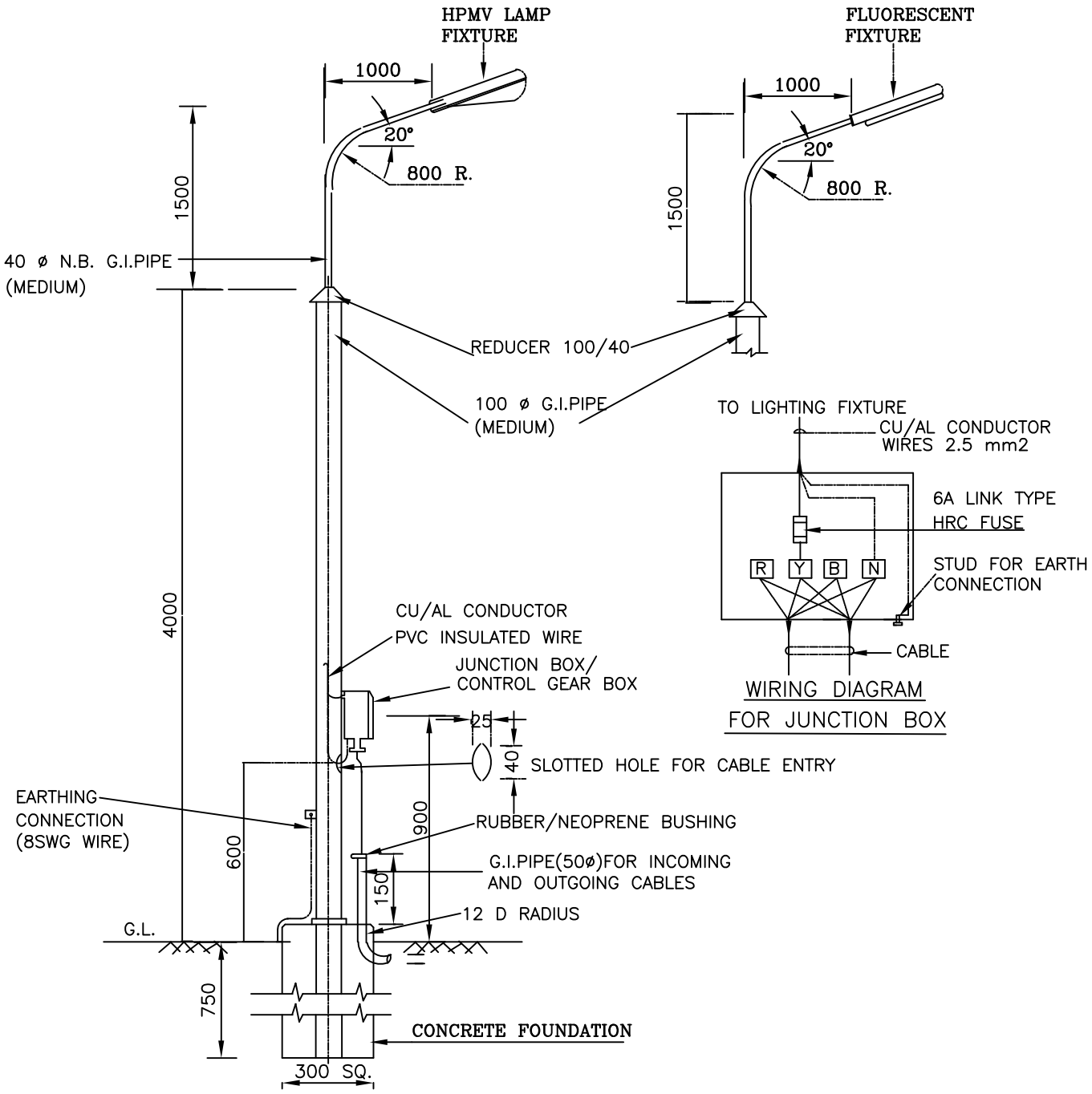

पी डी आई एल PDIL	TYPICAL STREET LIGHTING POLE	PDS: E 213	0
		DOCUMENT NO.	REV.
		SHEET 1 OF 1	

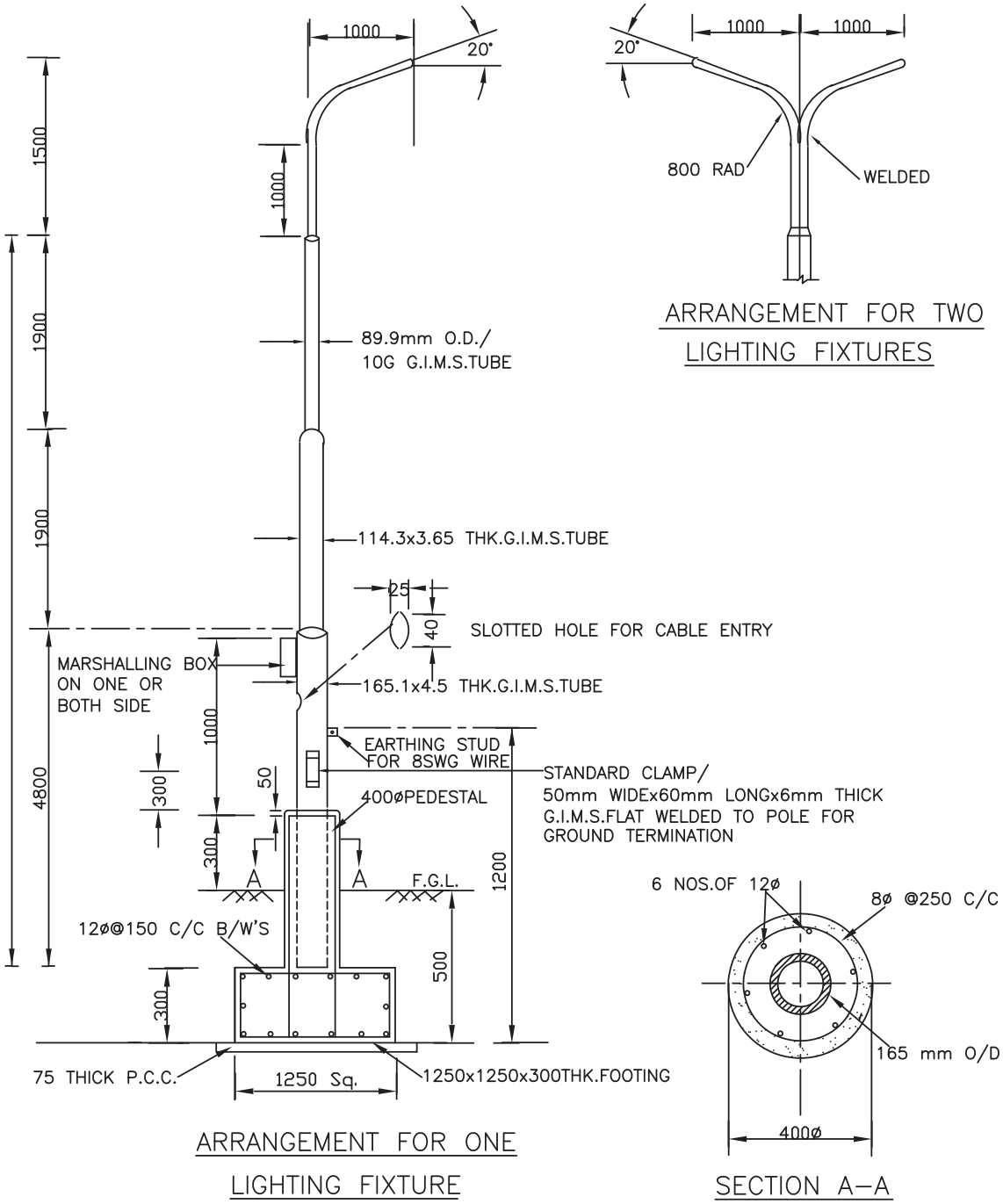

NOTE :–

1. CONCRETING AND APPROVED MOUNTING HARDWARE FOR LIGHTING FIXTURES ARE INCLUDING IN SCOPE OF SUPPLY.
2. CONCRETE FOUNDATION OF GRADE M15 SHALL BE PROVIDED.

ALL DIMENSIONS ARE IN mm.

पी डी आई एल PDIL	COMPONENT RATING FOR DOL STARTER	PDS: E 402	0
		DOCUMENT NO.	REV.
		SHEET 1 OF 1	

SL. NO.	MOTOR RATING IN KW	FULL LOAD CURRENT IN AMPS.	STARTING CURRENT IN AMPS.	MOTOR DUTY SWITCH RATING IN AMPS.	FUSE RATING IN AMPS.	CONTACTOR RATING IN AMPS.	THERMAL O/L RANGE IN AMPS.		C.T. RATIO	POWER CABLE SIZE sq. mm (PVCAPVC)
							L&T	SIEMENS		
1.	0.18	0.59	4.2	16	2	16	0.4–0.65	0.5–0.8	2/1	3x2.5(CU)
2.	0.25	0.88	6.3	16	4	16	0.6–1.0	0.8–1.2	2/1	3x2.5(CU)
3.	0.37	1.05	7.56	16	4	16	0.9–1.5	0.8–1.25	2/1	3x2.5(CU)
4.	0.55	1.50	10.8	16	6	16	1.4–2.3	1.0–1.6	2/1	3x2.5(CU)
5.	0.75	1.80	12.96	16	6	16	1.4–2.3	1.25–2.0	2/1	3x2.5(CU)
6.	1.10	2.50	18.0	16	10	16	2.3–3.0	2.0–3.2	5/1	3x2.5(CU)
7.	1.50	3.4	24.4	16	16	16	3.0–5.0	2.5–4.0	5/1	3x2.5(CU)
8.	2.20	4.60	33.1	16	16	16	4.5–7.5	3.2–5.0	5/1	3x2.5(CU)
9.	3.00	7.0	50.4	32	20	16	4.5–7.5	5.0–8.0	10/1	3x2.5(CU)
10.	3.70	7.3	52.5	32	20	16	6.0–10.0	5.0–8.0	10/1	3x2.5(CU)
11.	5.50	10.5	75.6	32	32	16	9.0–15.0	8.0–12.5	15/1	3x4(CU)
12.	7.50	14.0	100.8	63	32	16	9.0–15.0	10.0–16.0	20/1	3x6(CU)
13.	9.30	17.5	126.0	63	32	32	14.0–23.0	12.5–20.0	20/1	3x10(AL)
14.	11.0	20.6	148.3	63	63	32	14.0–23.0	16.0–25.0	25/1	3x10(AL)
15.	15.0	28.0	201.6	63	63	32	20.0–33.0	20.0–32.0	35/1	3x16(AL)
16.	18.5	33.0	237.6	100	80	40	30.0–50.0	25.0–36.0	40/1	3x25(AL)
17.	22.0	40.0	288.0	125	80	45	30.0–50.0	32.0–50.0	50/1	3x25(AL)
18.	30.0	52.0	374.4	125	100	70	45.0–75.0	40.0–57.0	60/1	3x35(AL)
19.	37.0	63.5	457.2	125	125	70	45.0–75.0	57.0–70.0	75/1	3x50(AL)
20.	45.0	76.0	557.2	200	160	110	66.0–110.0	70.0–95.0	100/1	3x70(AL)
21.	55.0	96.0	691.7	250	200	110	66.0–110.0	85.0–105.0	125/1	3x95(AL)
22.	67.5	119.0	858.0	250	200	200	90.0–150.0	85.0–135.0	125/1	3x150(AL)
23.	75.0	140.0	1008.0	A.C.B.	A.C.B.	A.C.B.	MICROPROCESSOR RELAY		150/1	3x185(AL)
24.	90.0	156.0	1123.2	A.C.B.	A.C.B.	A.C.B.	MICROPROCESSOR RELAY		175/1	3x240(AL)
25.	110.0	192.0	1382.4	A.C.B.	A.C.B.	A.C.B.	MICROPROCESSOR RELAY		225/1	3x300(AL)
26.	125.0	217.0	1627.5	A.C.B.	A.C.B.	A.C.B.	MICROPROCESSOR RELAY		250/1	3x400(AL)
27.	132.0	234.0	1684.8	A.C.B.	A.C.B.	A.C.B.	MICROPROCESSOR RELAY		250/1	3x400(AL)
28.	160.0	279.0	2008.8	A.C.B.	A.C.B.	A.C.B.	MICROPROCESSOR RELAY		300/1	2–3x185(AL)
29.	180.0	304.0	2188.8	A.C.B.	A.C.B.	A.C.B.	MICROPROCESSOR RELAY		350/1	2–3x240(AL)

NOTE:–

1. THE ABOVE DATA IS APPLICABLE FOR 415V, 4 POLE MOTORS.
2. AMMETERS SHALL HAVE UNIFORM SCALE UPTO C.T. PRIMARY CURRENT AND COMPRESSED END SCALE UPTO SIX TIMES THE C.T. PRIMERY CURRENT.
3. POWER CABLE SIZE SHALL BE SUBJECT TO VOLTAGE DROP CHECK.

SL. NO.	FEEDER RATING		SWITCH RATING AC-23	FUSE RATING (AMP)	C.T. RATIO	AMMETER SCALE RANGE	* POWER CABLE SIZE sq. mm (PVCAPVC)	REMARKS
	KVA	AMP						
1.	10	16	32	25	20/5	0-20	3/4x6(CU)	
2.	25	40	63	63	50/5	0-50	3/4x25(AL)	
3.	35	50	100	80	60/5	0-60	3/4x35(AL)	
4.	45	60	100	100	75/5	0-75	3/4x50(AL)	
5.	50	70	100	100	75/5	0-75	3/3.5x70(AL)	
6.	60	80	125	125	100/5	0-100	3/3.5x70(AL)	
7.	65	90	200	160	100/5	0-100	3/3.5x95(AL)	
8.	70	100	200	160	125/5	0-125	3/3.5x120(AL)	
9.	80	125	200	200	150/5	0-150	3/3.5x150(AL)	
10.	100	150	250	250	200/5	0-200	3/3.5x185(AL)	
11.	125	175	315	300	200/5	0-200	3/3.5x240(AL)	
12.	140	200	315	300	250/5	0-250	3/3.5x300(AL)	
13.	170	250	400	400	300/5	0-300	2-3/3.5x150(AL)	
14.	200	300	400	-	400/5	0-400	2-3/3.5x185(AL)	
15.	275	400	630	-	630/5	0-630	2-3/3.5x300(AL)	
16.	350	500	630	-	630/5	0-630	3-3/3.5x240(AL)	
17.	425	600	800	-	800/5	0-800	3-3/3.5x300(AL)	
18.	500	700	800	-	800/5	0-800	3-3/3.5x400(AL)	

पी डी आई एल PDIL	SCHEMATIC DIAGRAM A.C.CONTROL SUPPLY THROUGH CONTROL TRANSFORMER FOR SWITCH BOARDS WITH BUS COUPLER	PDS: E 412	1
		DOCUMENT NO.	REV
		SHEET 1 OF 1	

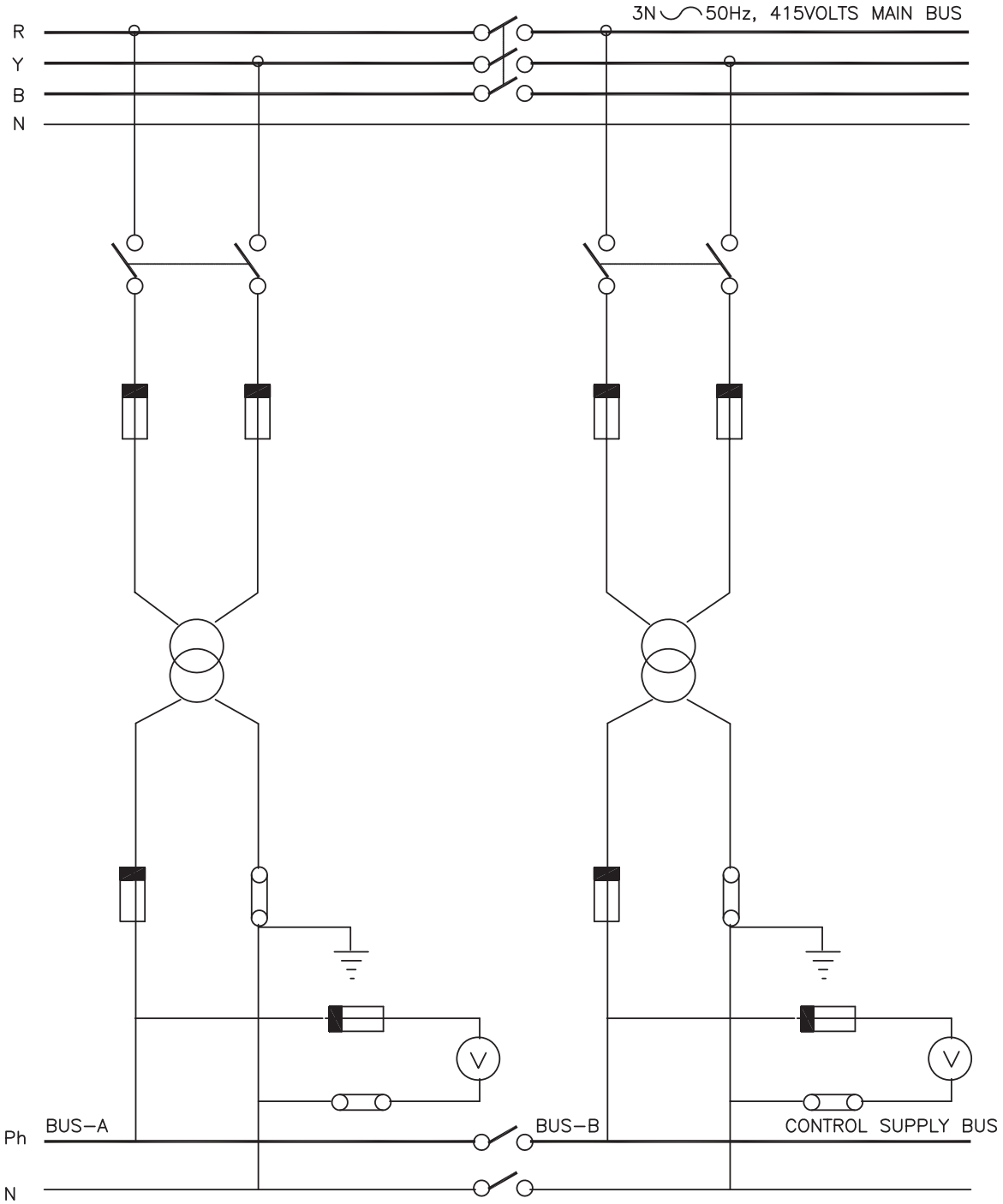

NOTES:–

1. EACH TRANSFORMER SHALL BE RATED FOR 2.5 TIMES THE TOTAL CONTROL SUPPLY LOAD.
2. THE CONTROL BUS INTERCONNECTING SWITCH SHALL BE LOCKABLE IN OFF POSITION AND LOCATED IN BUS COUPLER PANEL.

पी डी आई एल PDIL	SCHEMATIC DIAGRAM PANIC LIGHT	PDS: E 464	0
		DOCUMENT NO.	REV.
		SHEET 1 OF 1	

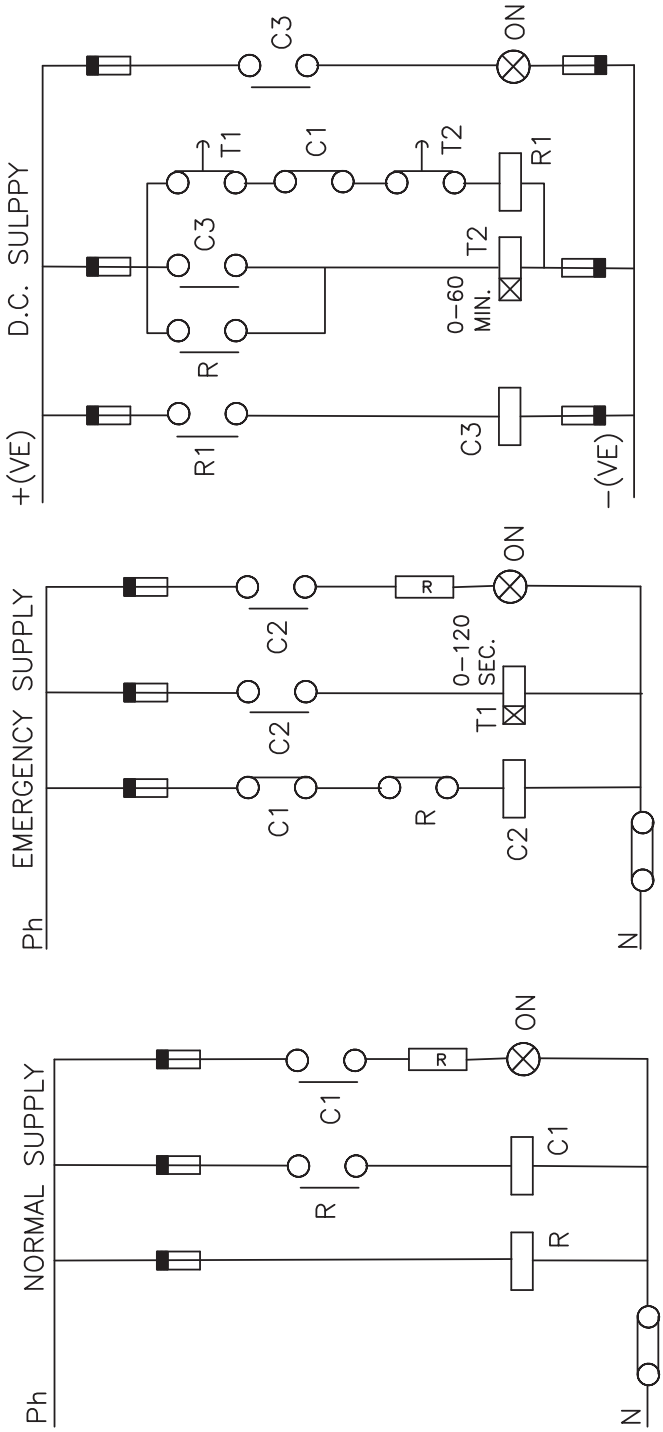

NOTE:–

CONTACTORS C1,C2 AND C3 CONTROLS THE LIGHTING FEEDERS FOR NORMAL,EMERGENCY AND D.C. SUPPLY RESPECTIVELY.

पी डी आई एल PDIL	DETAILS OF CONCRETE CABLE TRENCH	PDS: E 510	0
		DOCUMENT NO.	REV.
		SHEET 1 OF 1	

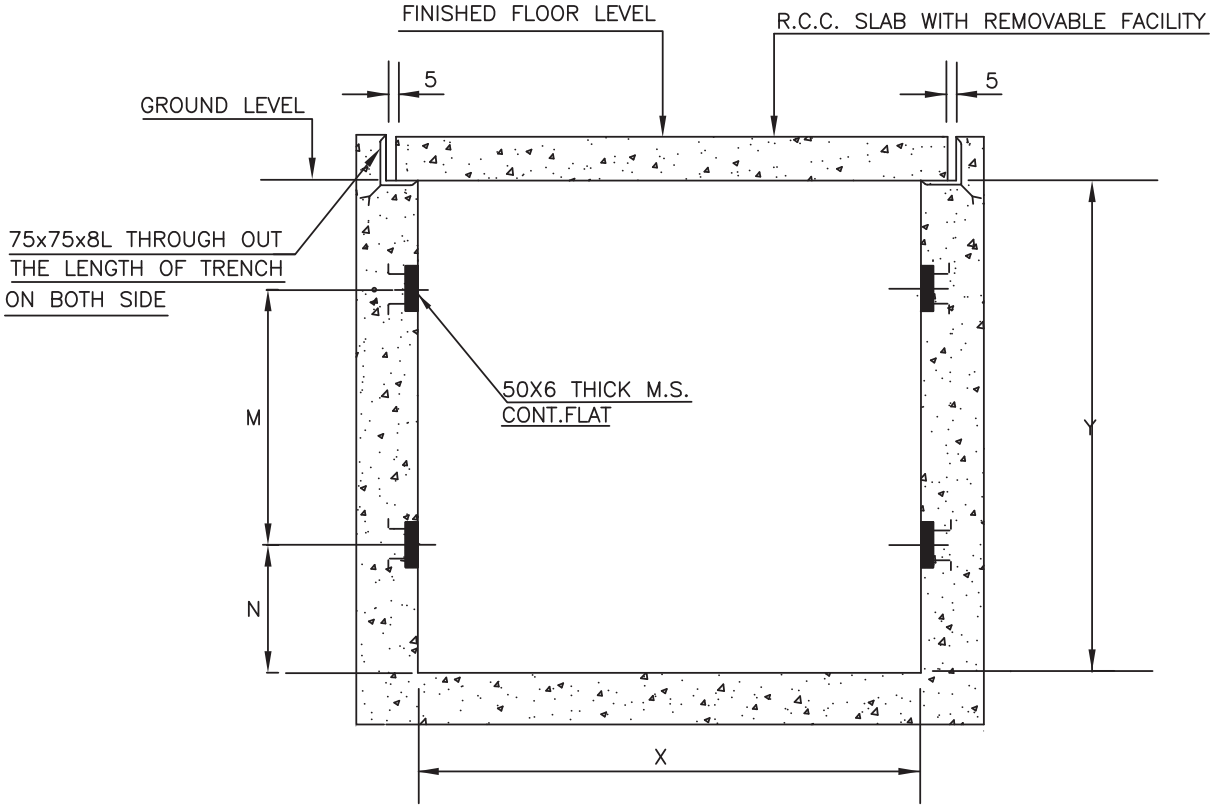

SECTION OF TRENCH

DESIGN TYPE	X	Y	N	M
5T 350DS.	1400	1500	400	650
4T 350DS.	1400	1200	250	650
3T 350DS.	1400	900	250	300
5T 350SS.	1000	1500	400	650
4T 350SS.	1000	1200	250	650
3T 350SS.	1000	900	250	300
5T 250DS.	1200	1500	400	650
4T 250DS.	1200	1200	250	650
3T 250DS.	1200	900	250	300
5T 250SS.	900	1500	400	650
4T 250SS.	900	1200	250	650
3T 250SS.	900	900	250	300

NOTES:—

1. THE TOP OF TRENCH SHALL MATCH THE FLOOR LEVEL IN PLANT AREA.
2. IN INDOORS INSTEAD OF RCC SLAB,20mm.THICK Al. EXTRUDED PLANK OR 10mm.THICK M.S.CHEQUERED PLATE SHALL BE USED AS PER PDS:E 507.
3. PROPER SLOPE TO BE GIVEN IN THE TRENCH FOR NATURAL DRAINAGE.
4. SS—SINGLE SIDE CABLE SUPPORTS.
5. DS—DOUBLE SIDE CABLE SUPPORTS.
6. ALL DIMENSIONS ARE IN mm.

पी डी आई एल PDIL	CABLE RACK ARRANGEMENT IN TRENCHES	PDS: E 511	0
		DOCUMENT NO.	REV.
		SHEET 1 OF 1	

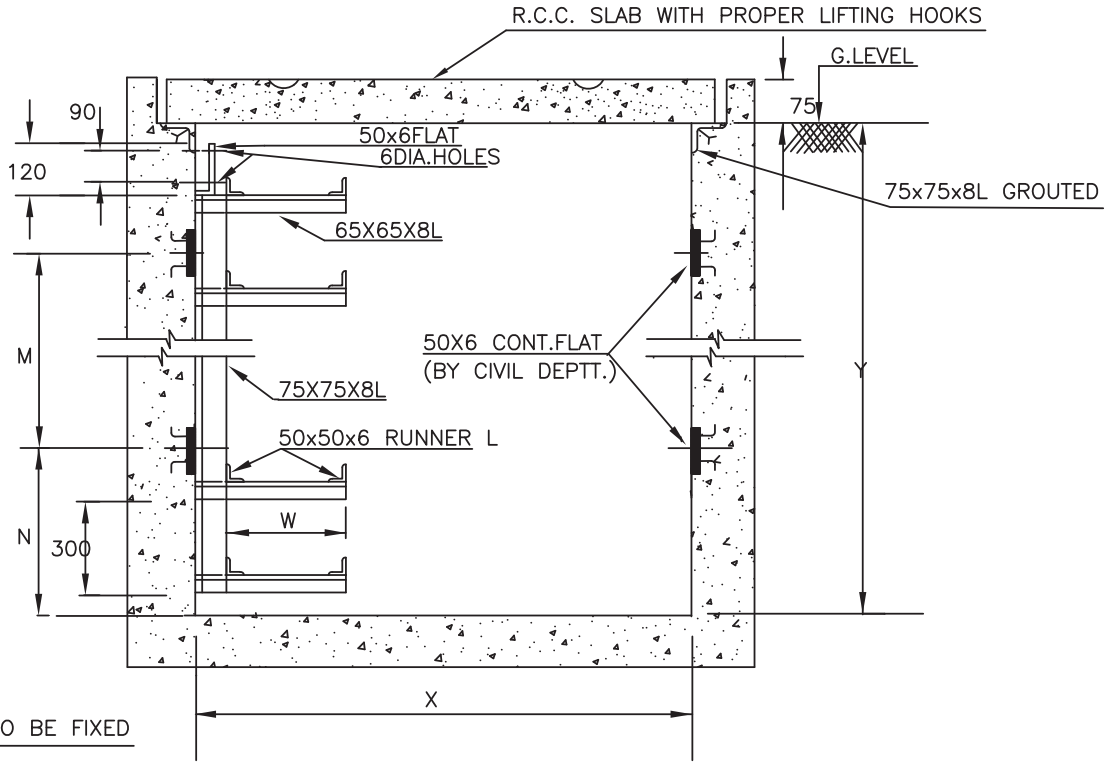

SECTION OF TRENCH

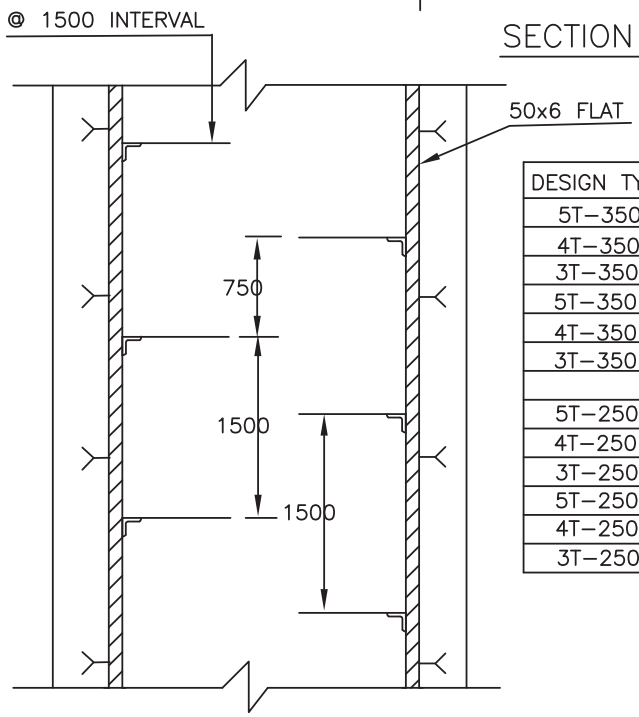

TYPICAL PLAN OF TRENCH

DESIGN TYPE	X	Y	N	M	W
5T–350–DS.	1400	1500	400	650	350
4T–350–DS.	1400	1200	250	650	350
3T–350–DS.	1400	900	250	300	350
5T–350–SS.	1000	1500	400	650	350
4T–350–SS.	1000	1200	250	650	350
3T–350–SS.	1000	900	250	300	350
5T–250–DS.	1200	1500	400	650	250
4T–250–DS.	1200	1200	250	650	250
3T–250–DS.	1200	900	250	300	250
5T–250–SS.	900	1500	400	650	250
4T–250–SS.	900	1200	250	650	250
3T–250–SS.	900	900	250	300	250

NOTES:–
1. SS–SINGLE SIDE CABLE SUPPORT.
2. DS–DOUBLE SIDE CABLE SUPPORT.
3. ALL DIMENSIONS ARE IN mm.

पी डी आई एल PDIL	FABRICATION DETAILS OF CABLE RACK IN TRENCH AND DUCT	PDS: E 512	1
		DOCUMENT NO.	REV
		SHEET 1 OF 1	

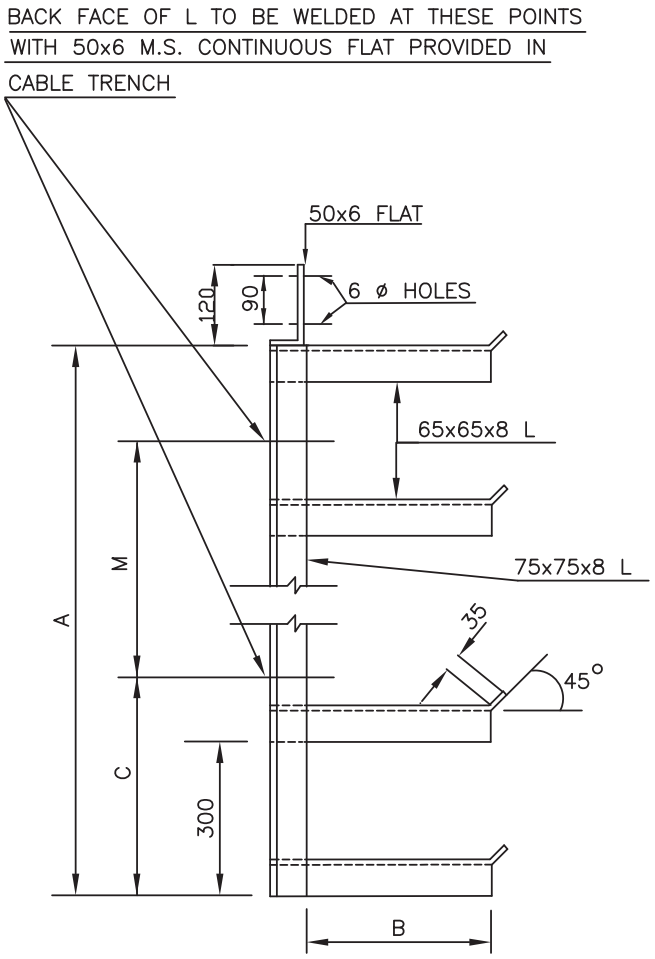

DESIGN TYPE	A	B	C	M	WT.OF STEEL PER UNIT(kg)
5T 350	1265	350	365	650	35
4T 350	965	350	215	650	28
3T 350	665	350	215	300	21
5T 250	1265	250	215	650	30
4T 250	965	250	215	650	25
3T 250	665	250	215	300	20

ALL DIMENSIONS ARE IN mm.

पी डी आई एल PDIL	TYPICAL ARRANGEMENT OF CABLES BURRIED IN SLITS	PDS: E 516	0
		DOCUMENT NO.	REV.
		SHEET 1 OF 1	

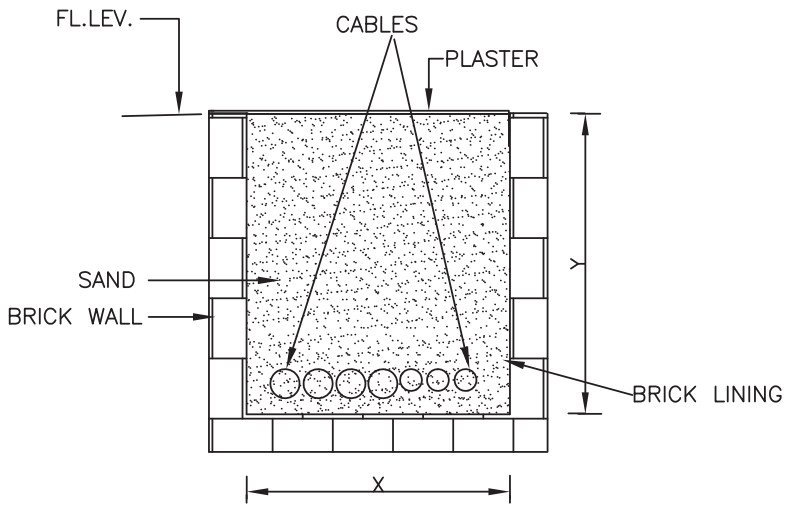

SECTION OF SLIT

DESIGN TYPE	X	Y
S 300	300	300
S 200	200	200

NOTE:–

1. CABLE SLITS SHALL BE FILLED WITH SAND AND PROPERELY PLASTERED WITH LEAN CONCRETE AFTER LAYING OF CABLES.
2. WHEREVER CABLES ARE COMING OUT OF THE SLIT, SUITABLE MECH.PROTECTION TO BE PROVIDED.

पी डी आई एल PDIL	FIXING ARRANGEMENT OF PERFORATED CABLE TRAY (HORIZONTAL FORMATION CEILING SUPPORTED)	PDS: E 525	1
		DOCUMENT NO.	REV
		SHEET 1 OF 1	

CEILING SUPPORTED RACK

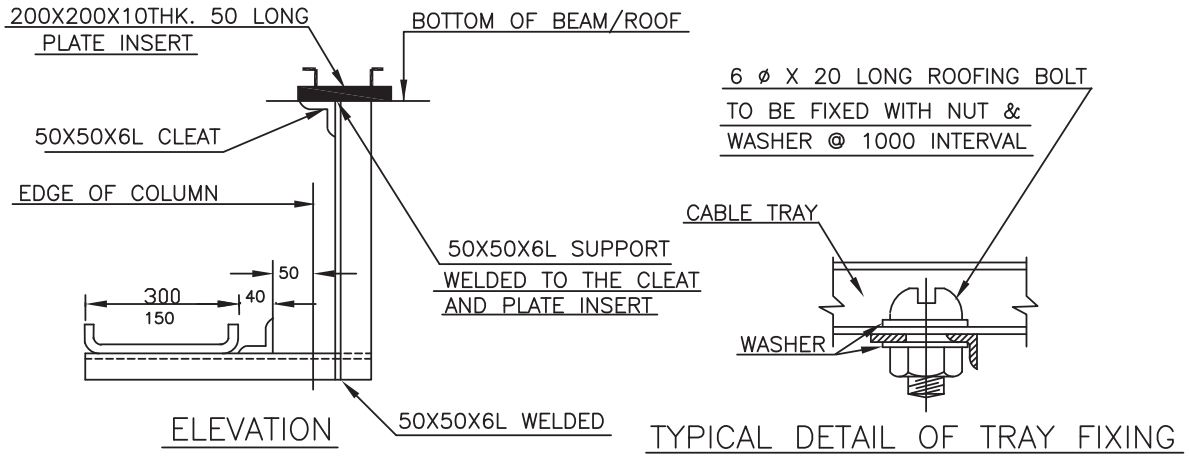

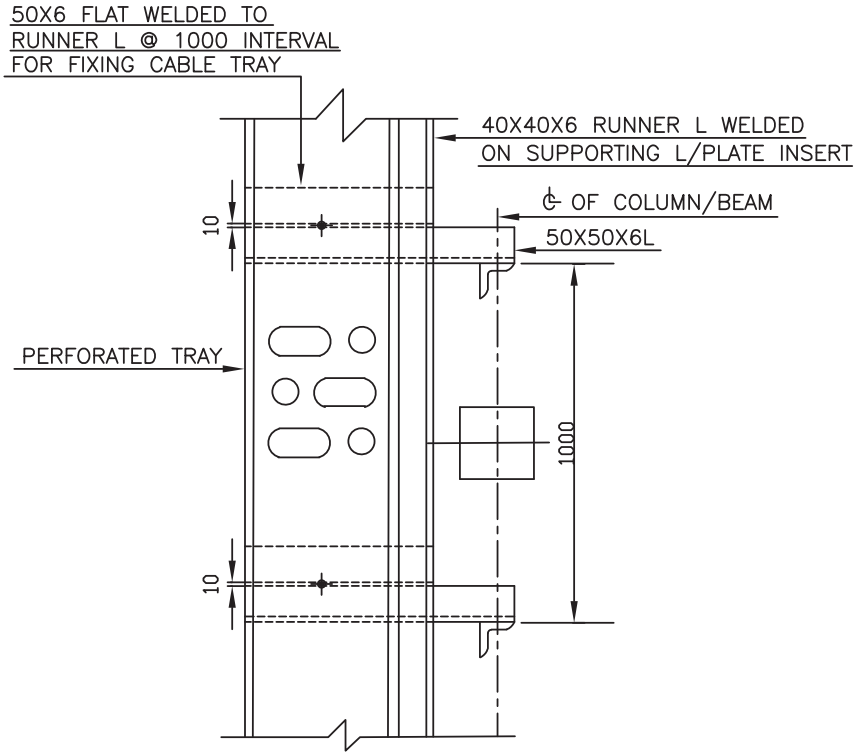

PLAN

NOTE:—

1. THE TRAY SHALL BE FIXED AT 1000 INTEREVAL BY 6 ø X 20 LONG ROOFING BOLT AND SHALL BE USED ONE NO. FOR 150 WIDE TRAYS & TWO NOS. FOR 300 WIDE TRAYS.
2. FOR MULTI TIERS RACK MINIMUM CLEARANCE BETWEEN THE TIER TO BE KEPT 300.
3. ALL DIMENSIONS ARE IN mm.

पी डी आई एल PDIL	FIXING ARRANGEMENT OF PERFORATED CABLE TRAY (HORIZONTAL FORMATION WALL / STRUCTURE SUPPORTED)	PDS: E 526	1
		DOCUMENT NO.	REV
		SHEET 1 OF 1	

WALL / STRUCTURE SUPPORTED RACK

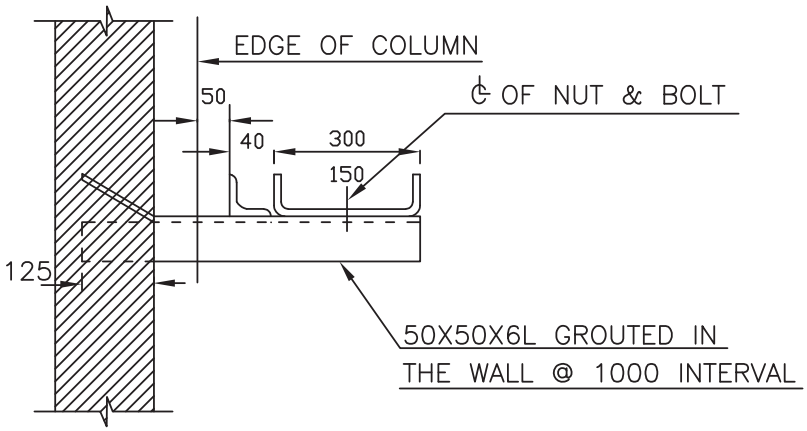

ELEVATION

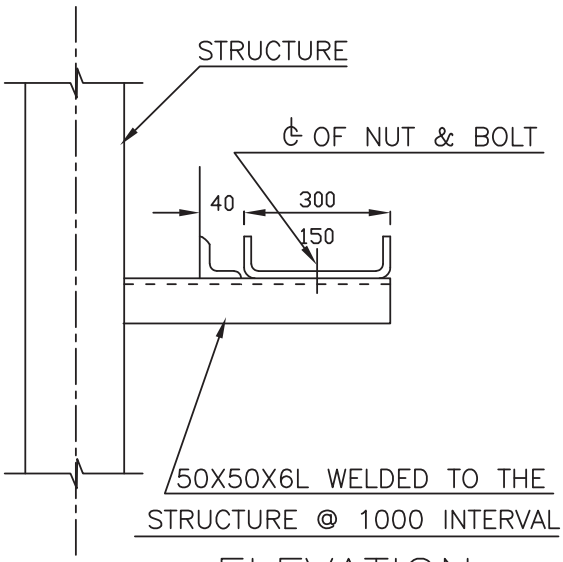

ELEVATION

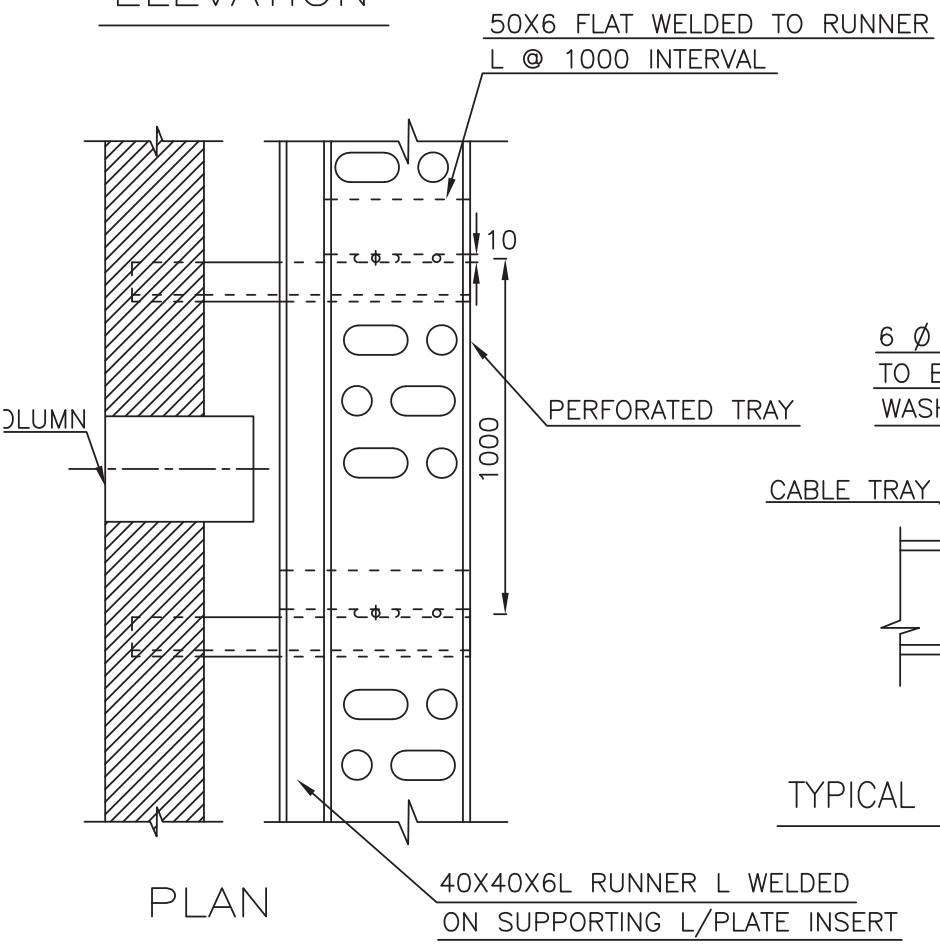

PLAN

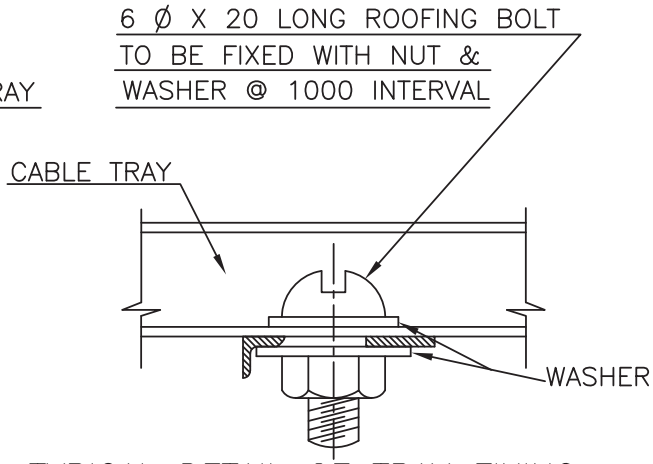

TYPICAL DETAIL OF TRAY FIXING

NOTES:–

1. THE TRAY SHALL BE FIXED AT 1000 INTERVAL BY 6 Ø X 20 LONG ROOFING BOLT. (ONE NO. FOR 150 & TWO NOS. FOR 300 WIDE TRAYS.)
2. FOR MULTI TIERS RACK MINIMUM CLEARANCE BETWEEN THE TIER TO BE KEPT 300.
3. ALL DIMENSION ARE IN mm.

पी डी आई एल PDIL	FIXING ARRANGEMENT OF PERFORATED CABLE TRAY (VERTICAL FORMATION)	PDS: E 527	1
		DOCUMENT NO.	REV
		SHEET 1 OF 1	

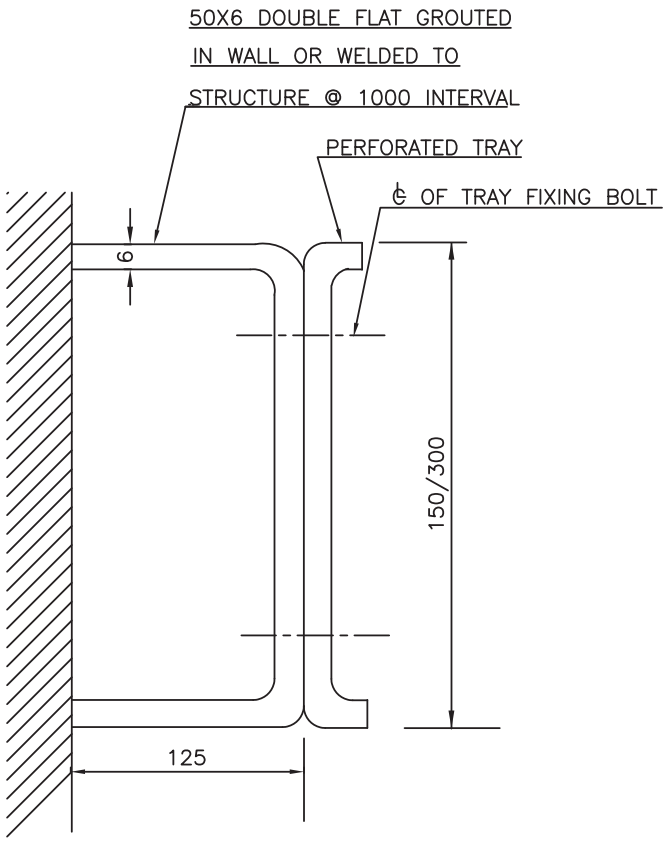

PLAN

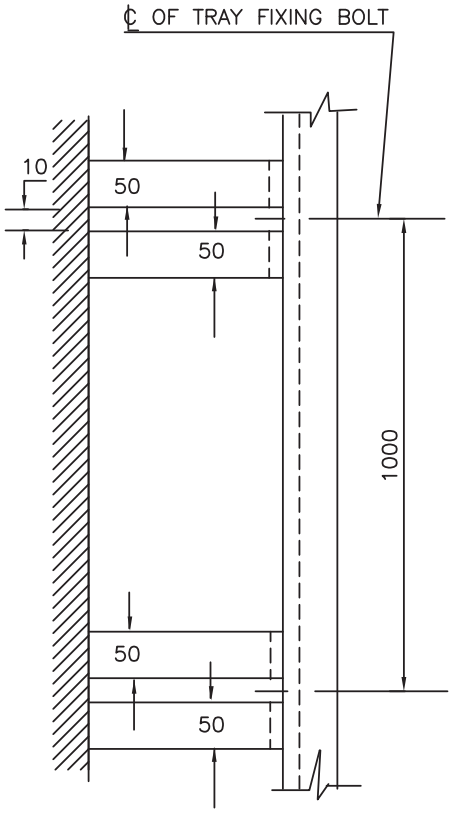

ELEVATION

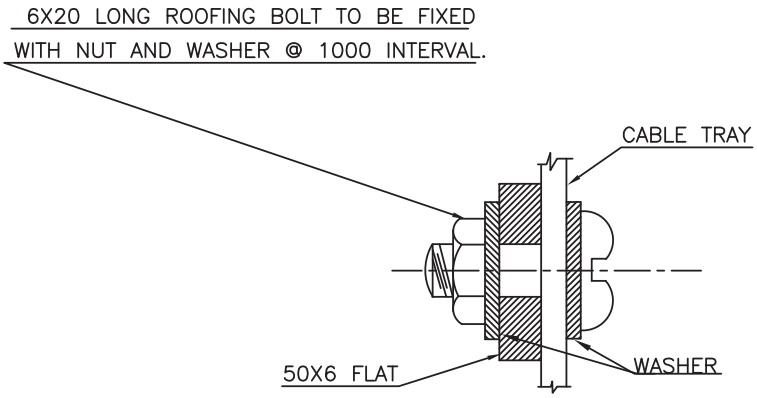

TYPICAL DETAIL OF TRAY FIXING

ALL DIMENSIONS ARE IN mm.

पी डी आई एल PDIL	PRE–FABRICATED CABLE TRAY STRAIGHT RUN	PDS: E 530	0
		DOCUMENT NO.	REV.
		SHEET 1 OF 1	

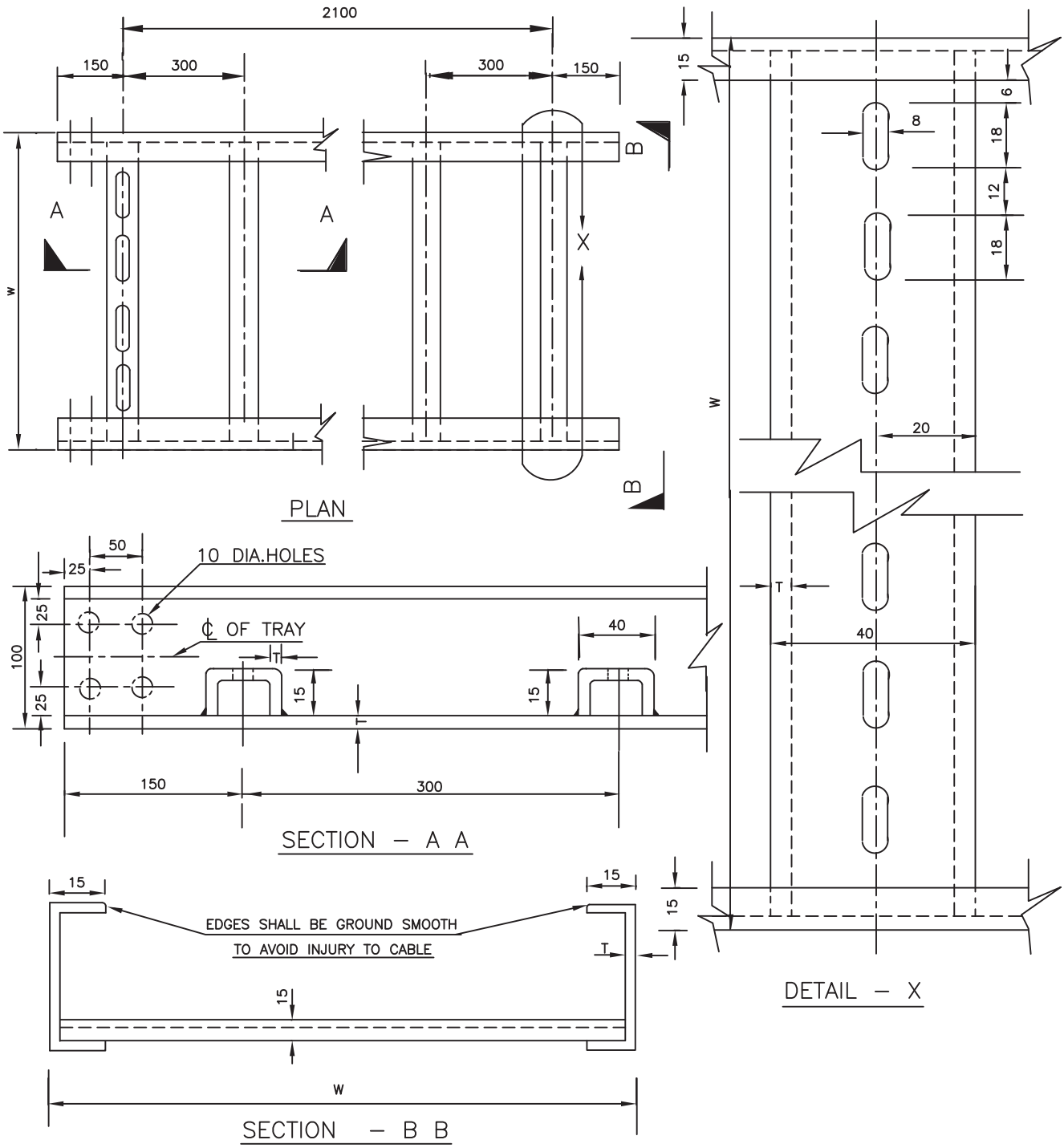

DESIGN TYPE (WIDTH)	MAX.SUPPORTING SPAN		WEIGHT/METER APPROX. IN Kg.	
	G. I.	A. L	G. I.	A. L
SR 900	2000	2000	10.5	3.6
SR 600	2000	2000	8.9	3.05
SR 450	2000	2000	8.0	2.75
SR 300	2000	2000	7.6	2.6
SR 150	2000	2000	6.8	2.33

NOTE:–

THICKNESS " T " SHALL BE 3mm FOR G.I AND 4mm.FOR AL.

पी डी आई एल PDIL	PRE–FABRICATED CABLE TRAY HORIZONTAL TEE	PDS: E 531	0
		DOCUMENT NO.	REV.
		SHEET 1 OF 1	

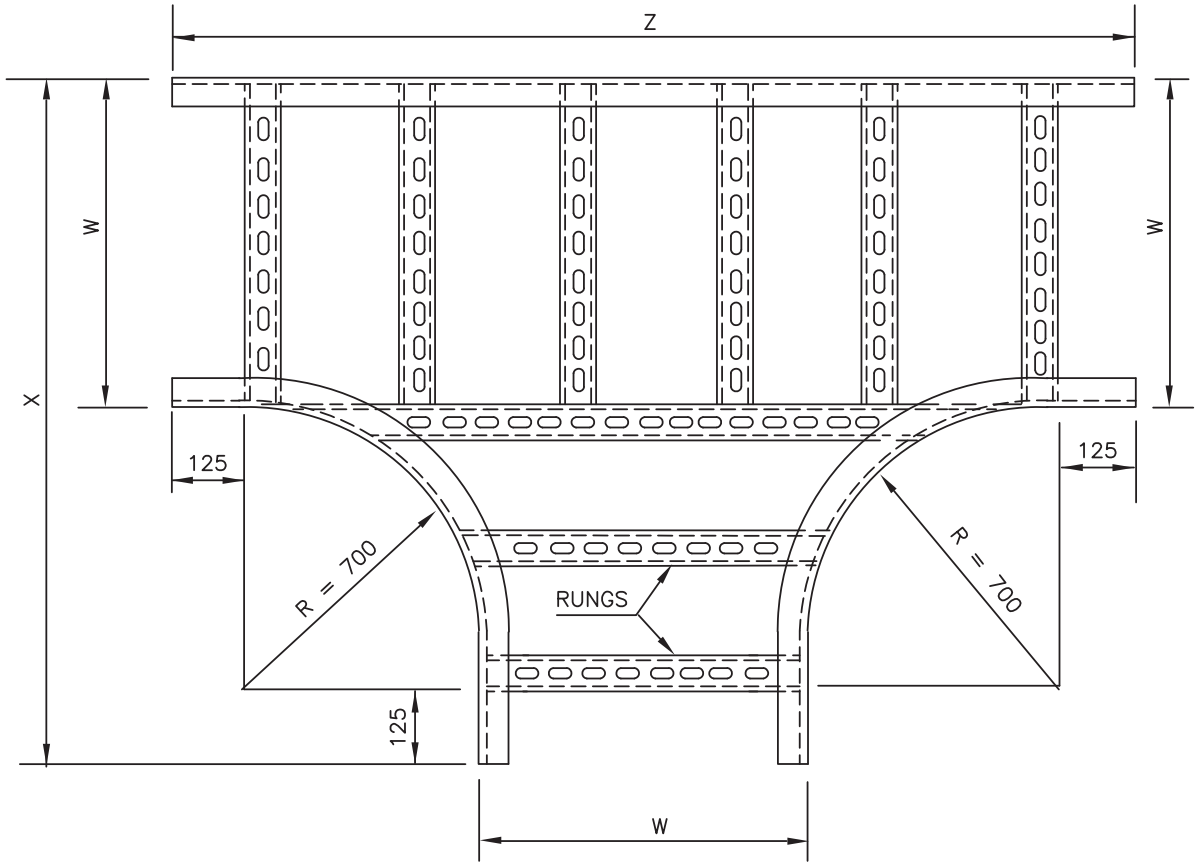

PLAN

DESIGN TYPE	W	X=R+W+125	Z=2R+W+250
HT 900	900	1725	2550
HT 600	600	1425	2250
HT 450	450	1275	2100
HT 300	300	1125	1950

NOTES :–

1. DISTANCE BETWEEN TWO RUNGS SHOULD BE APPROX. 300mm.
2. ALL DIMENSIONS ARE IN mm.

पी डी आई एल PDIL	PRE–FABRICATED CABLE TRAY HORIZONTAL CROSS	PDS: E 532	0
		DOCUMENT NO.	REV.
		SHEET 1 OF 1	

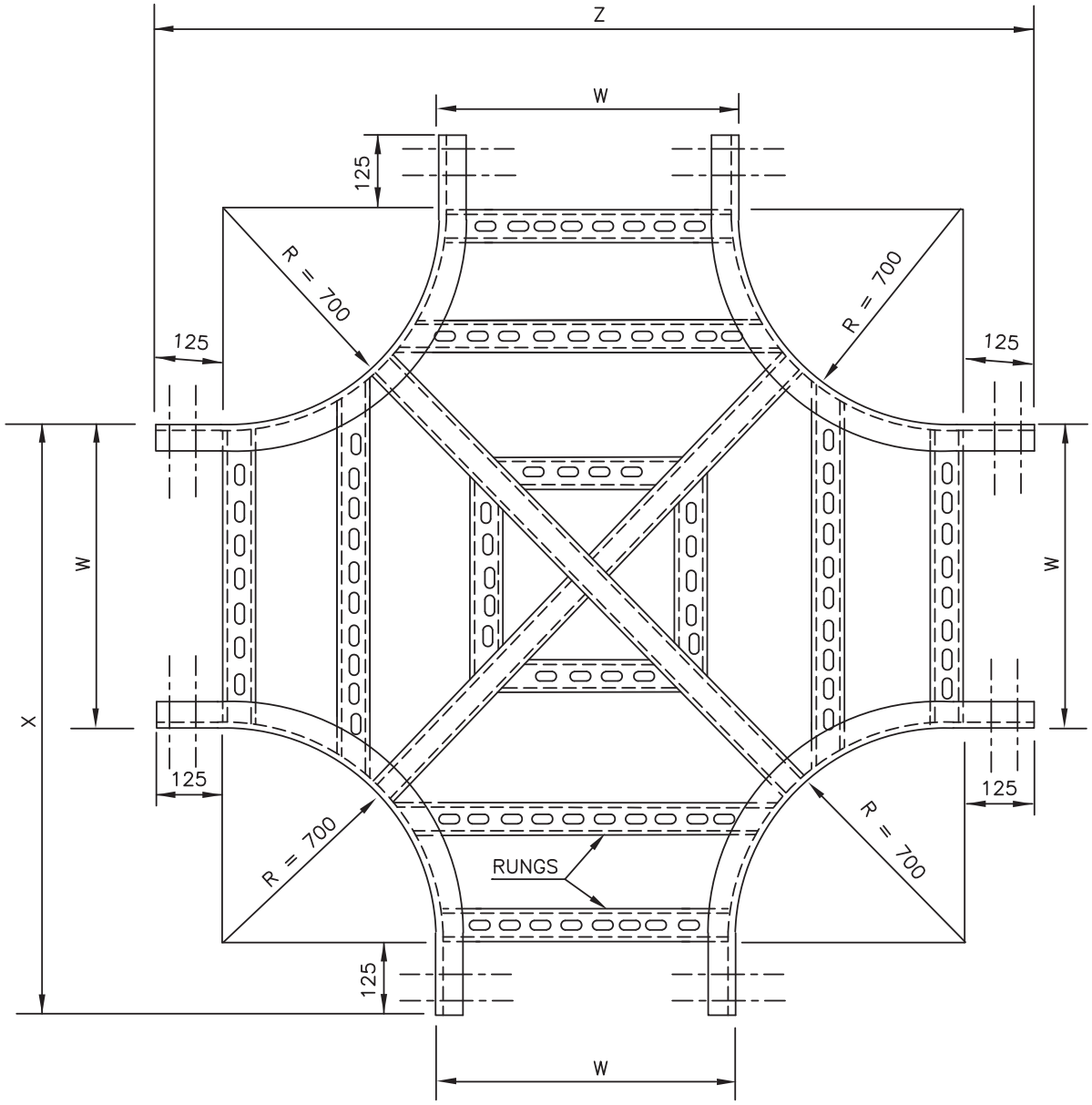

PLAN

DESIGN TYPE	W	X=R+W+125	Z=2R+W+250
HC 900	900	1725	2550
HC 600	600	1425	2250
HC 450	450	1275	2100
HC 300	300	1125	1950

NOTES :–

1. DISTANCE BETWEEN TWO RUNGS SHOULD BE APPROX. 300mm.
2. ALL DIMENSIONS ARE IN mm.

पी डी आई एल PDIL	PRE–FABRICATED CABLE TRAY 90° HORIZONTAL BENDS	PDS: E 533	0
		DOCUMENT NO.	REV.
		SHEET 1 OF 1	

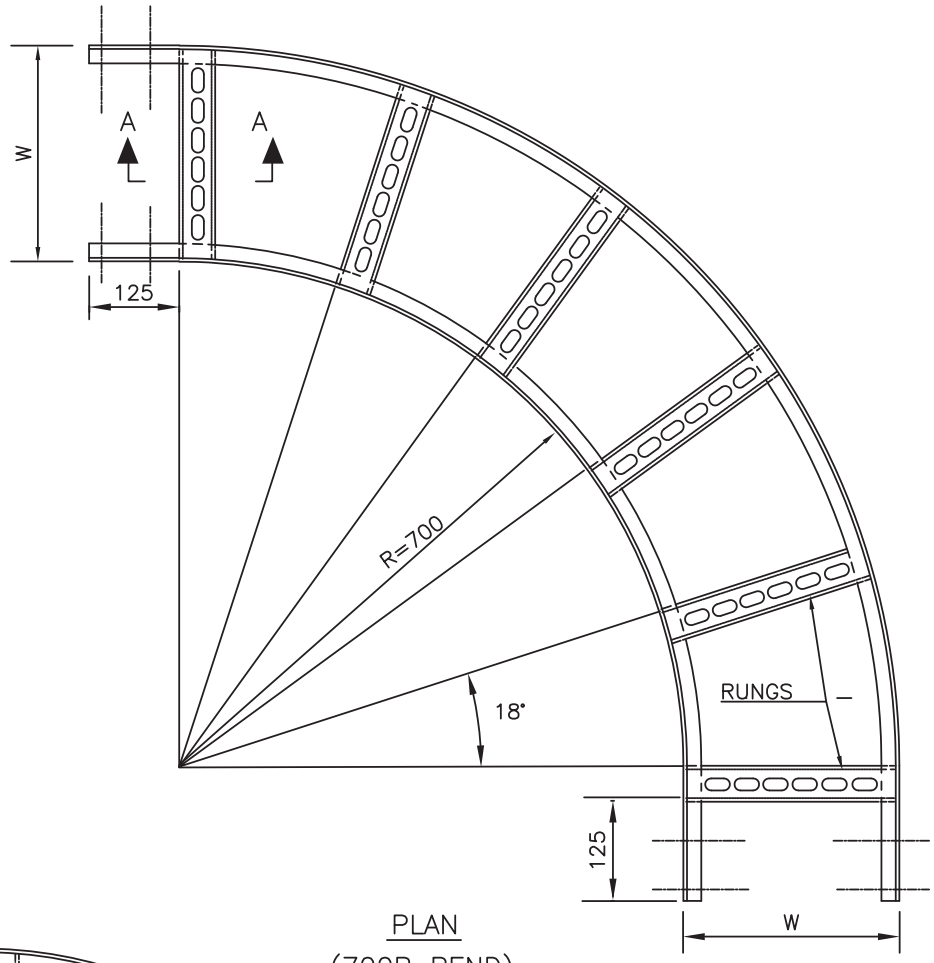

PLAN
(700R BEND)

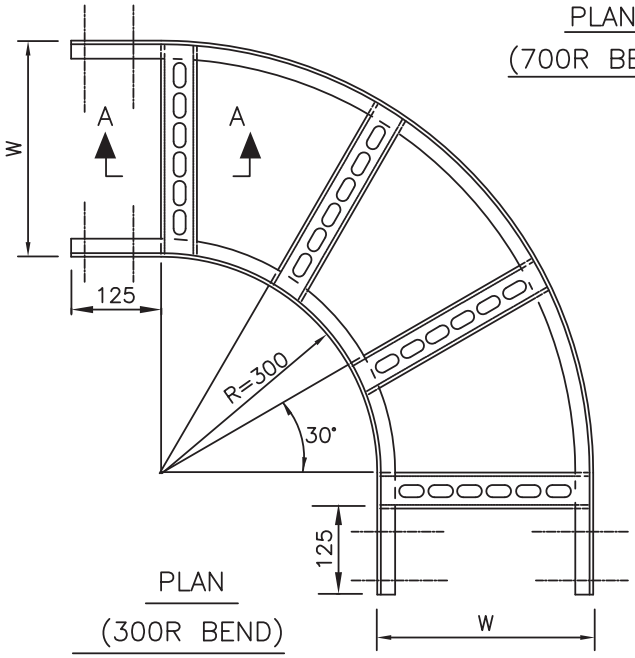

PLAN
(300R BEND)

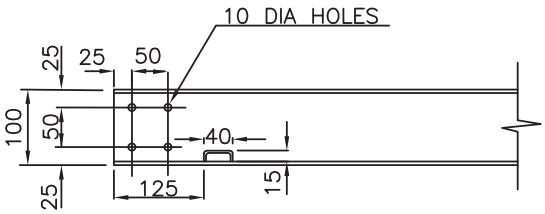

SECTION A–A

ALL DIMENSIONS ARE IN mm.

पी डी आई एल PDIL	PRE–FABRICATED CABLE TRAY 90° VERTICAL BEND BENDING RADIUS 1000 mm	PDS: E 534	0
		DOCUMENT NO.	REV.
		SHEET 1 OF 1	

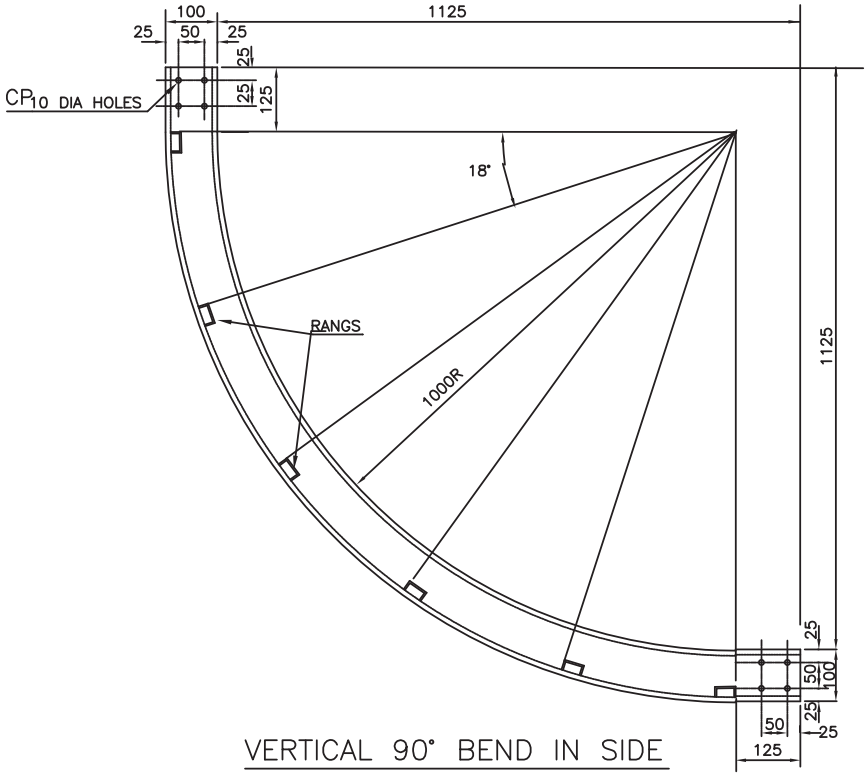

VERTICAL 90° BEND IN SIDE

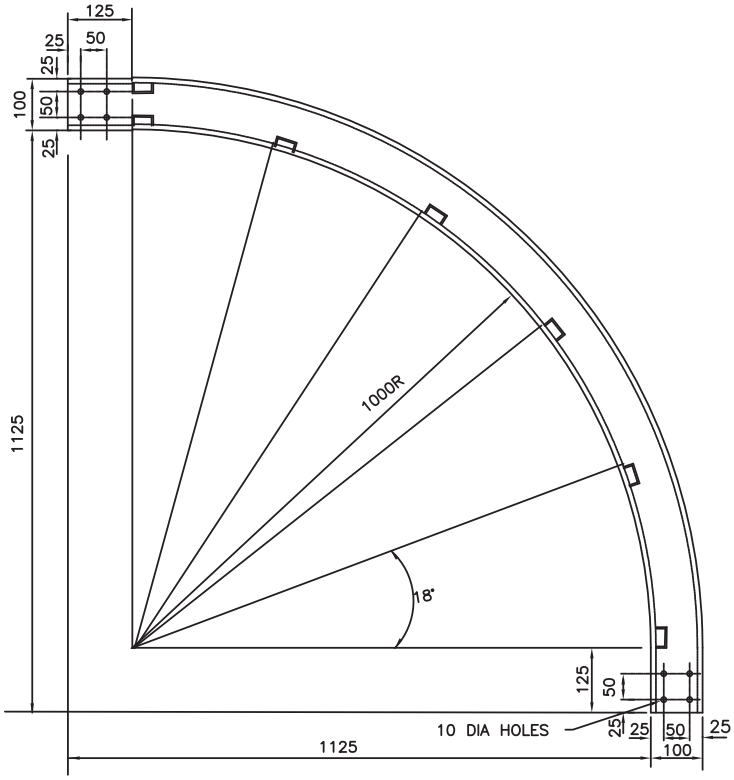

VERTICAL 90° BEND OUT SIDE

DIMENSIONS ARE IN mm.

पी डी आई एल PDIL	PRE–FABRICATED CABLE TRAY 90° VERTICAL BENDS BENDING RADIUS 600 mm	PDS: E 535	0
		DOCUMENT NO.	REV.
		SHEET 1 OF 1	

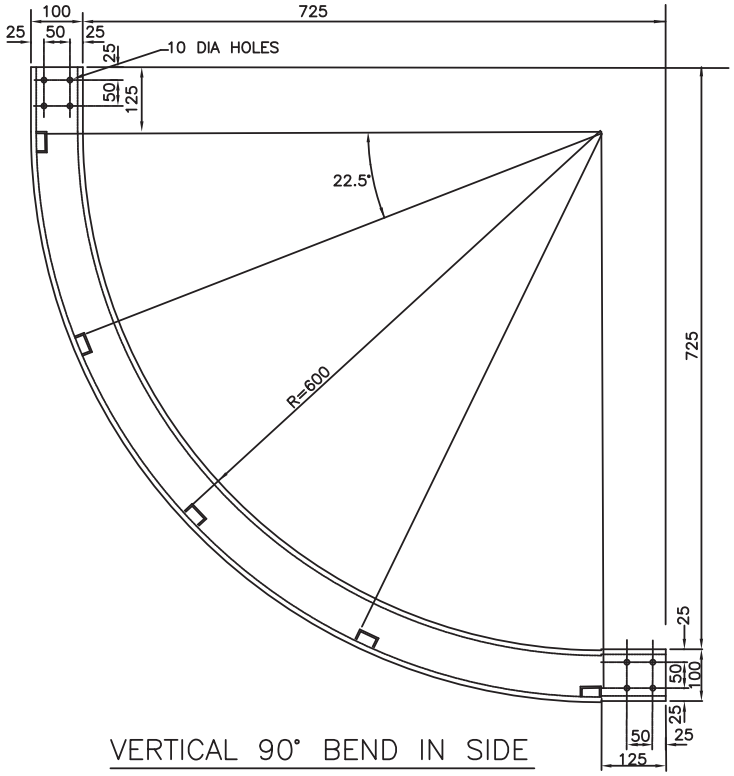

VERTICAL 90° BEND IN SIDE

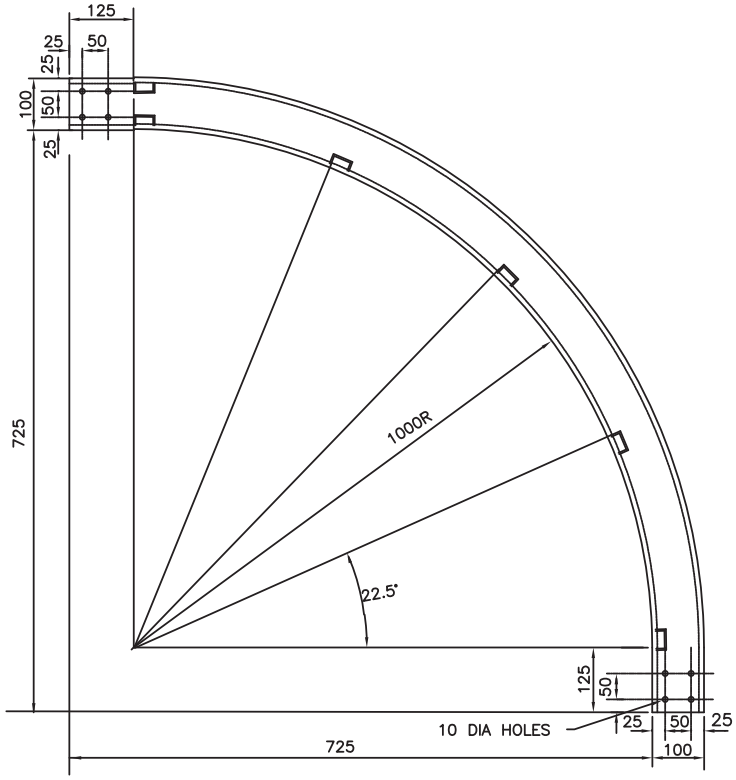

VERTICAL 90° BEND OUT SIDE

ALL DIMENSIONS ARE IN mm.

पी डी आई एल PDIL	PRE–FABRICATED CABLE TRAY COUPLING ARRANGEMENT	PDS: E 536	0
		DOCUMENT NO.	REV.
		SHEET 1 OF 1	

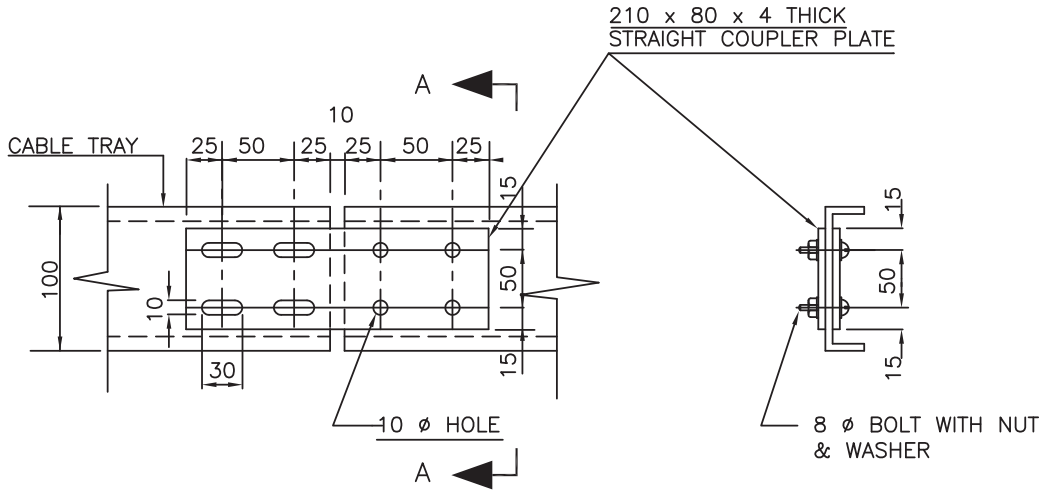

STRAIGHT RUN

SECTION A–A

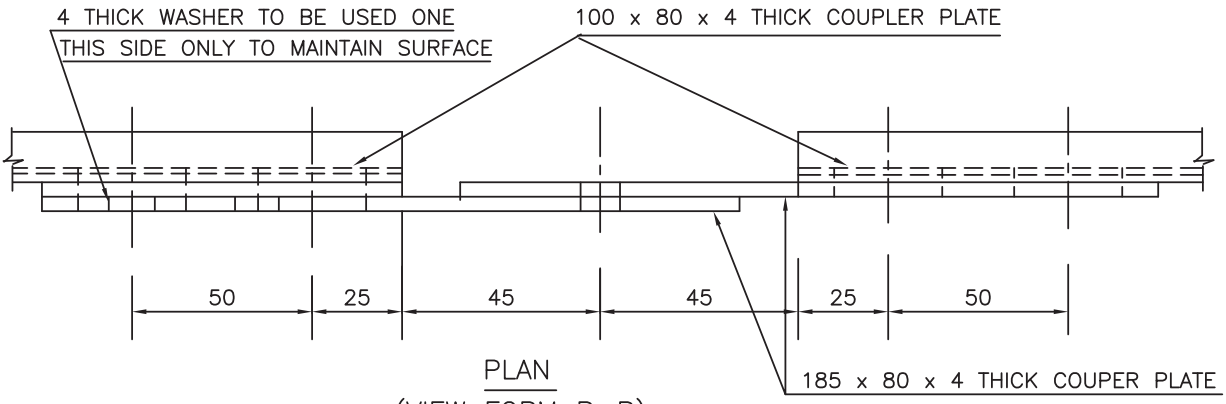

PLAN
(VIEW FORM B–B)

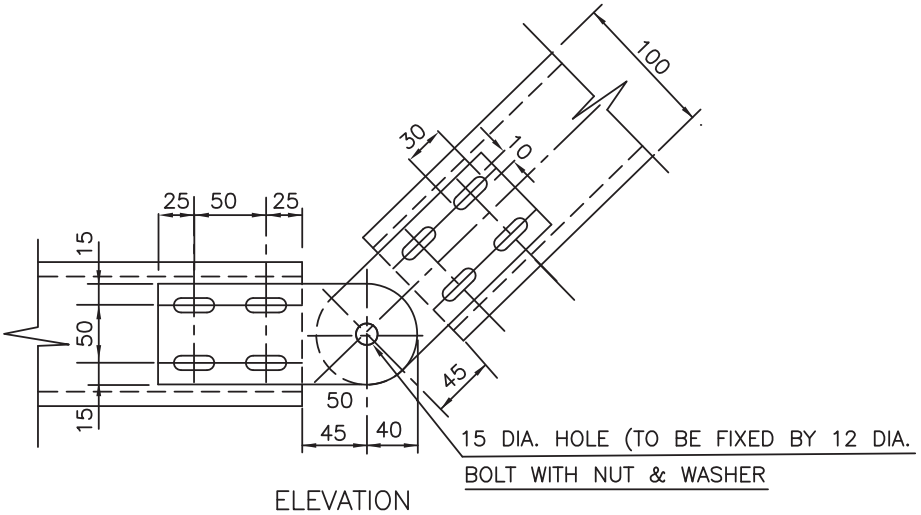

ELEVATION
(ADJUSTABLE BEND)

ALL DIMENSIONS ARE IN mm.

पी डी आई एल PDIL	PRE–FABRICATED CABLE TRAY FIXING ARRANGEMENT	PDS: E 537	0
		DOCUMENT NO.	REV.
		SHEET 1 OF 1	

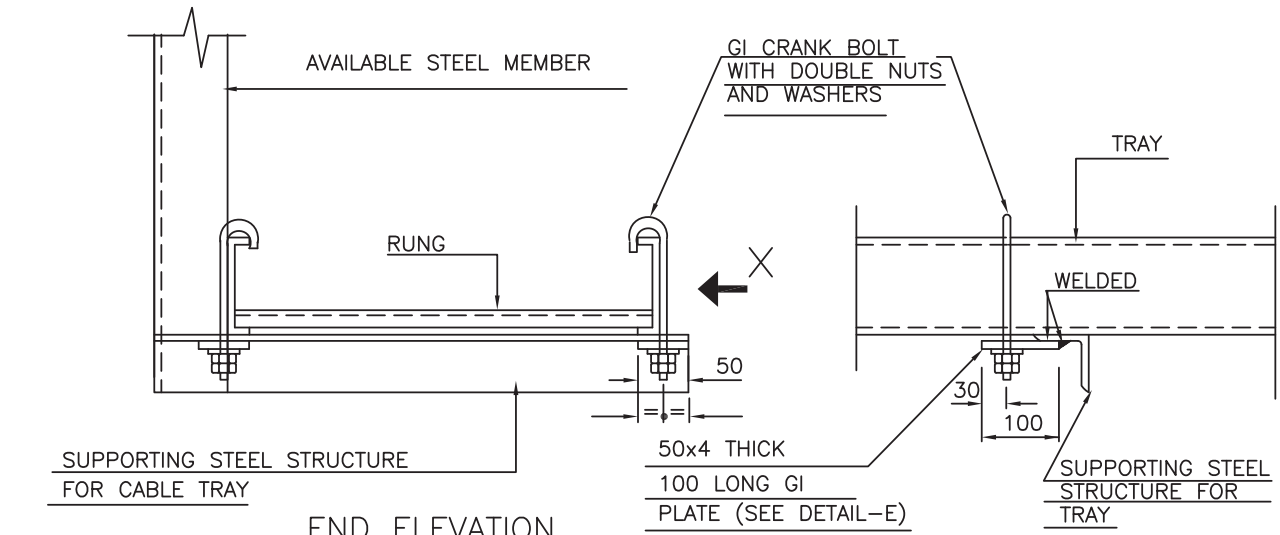

END ELEVATION

(HORIZONTAL RUN)

VIEW AT –X

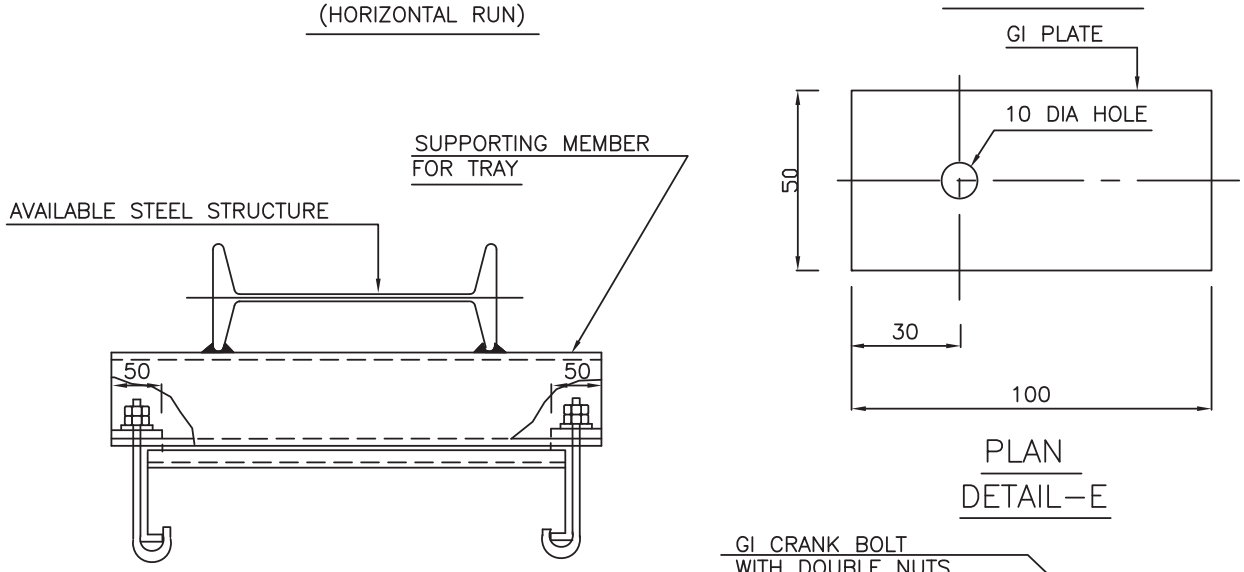

PLAN

DETAIL–E

PLAN

VERTICAL RUN (RISER)

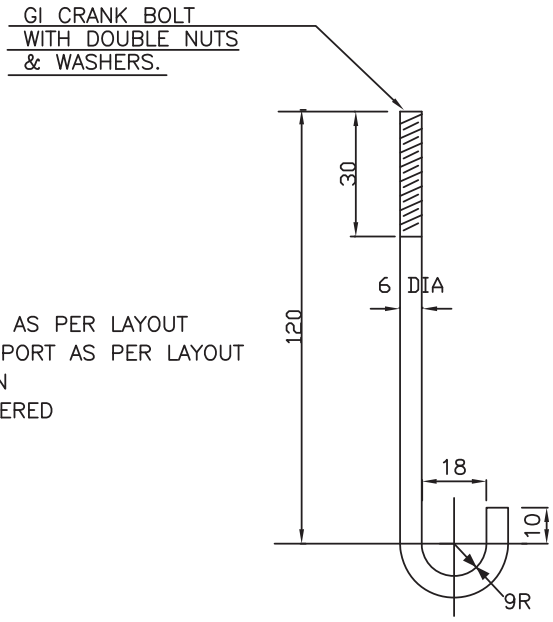

NOTES:–

1. HORIZONTAL RUN TO BE CLAMPED WITH EVERY SUPPORT AS PER LAYOUT
2. VERTICAL RUN/ RISER TO BE CLAMPED WITH EVERY SUPPORT AS PER LAYOUT
3. EACH CRANK HOOK SHALL BE SUPPLIED WITH ONE PLAIN WASHER, ONE SPRING WASHER AND TWO DOUBLE CHAMFERED HEX NUTS. THESE SHAL BE GALVANISED ITEMS.
4. ALL DIMENSIONS ARE IN mm.

पी डी आई एल PDIL	PRE–FABRICATED CABLE TRAY REDUCING COUPLER PLATE	PDS: E 538	0
		DOCUMENT NO.	REV.
		SHEET 1 OF 1	

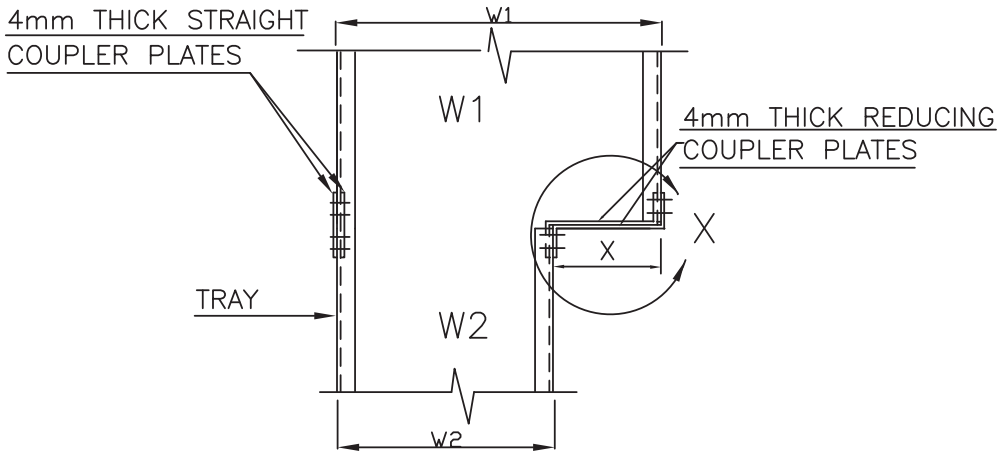

PLAN

(REDUCING TRAY JOINT)

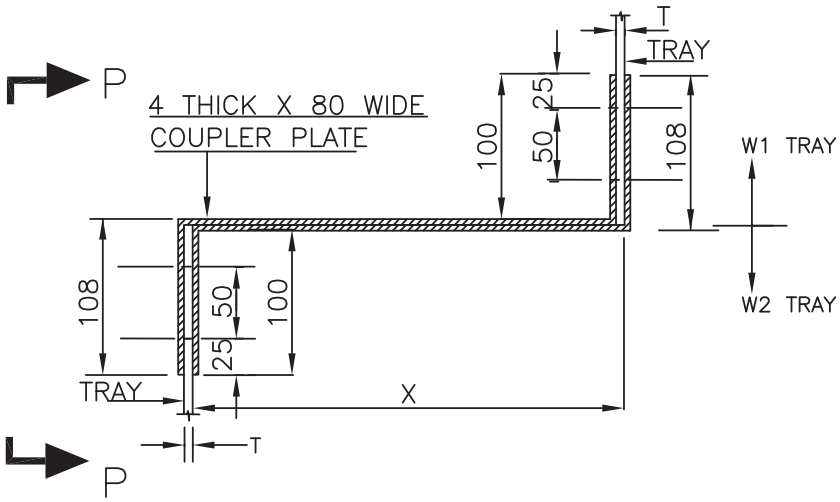

DETAIL– X

DETAIL OF REDUCING

COUPLER PLATE (4 THICK)

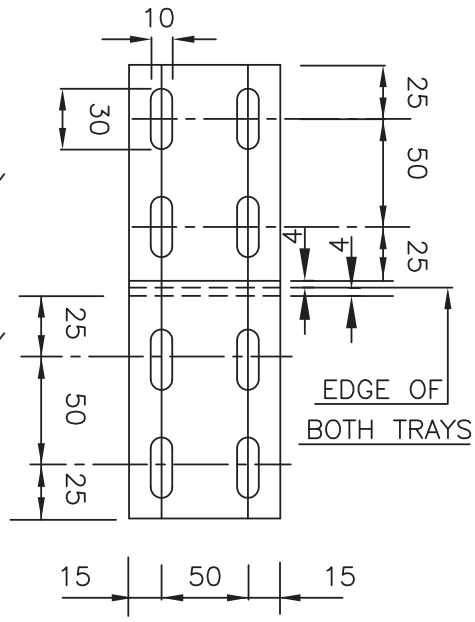

VIEW – P–P

SL. NO.	W1	W2	X
1	900	600 450 300	300 450 600
2	600	450 300	150 300
3	450	300 150	150 300

ALL DIMENSIONS ARE IN mm.

पी डी आई एल PDIL	ALUMINIUM JUNCTION BOX	PDS: E 547	0
		DOCUMENT NO.	REV.
		SHEET 1 OF 3	

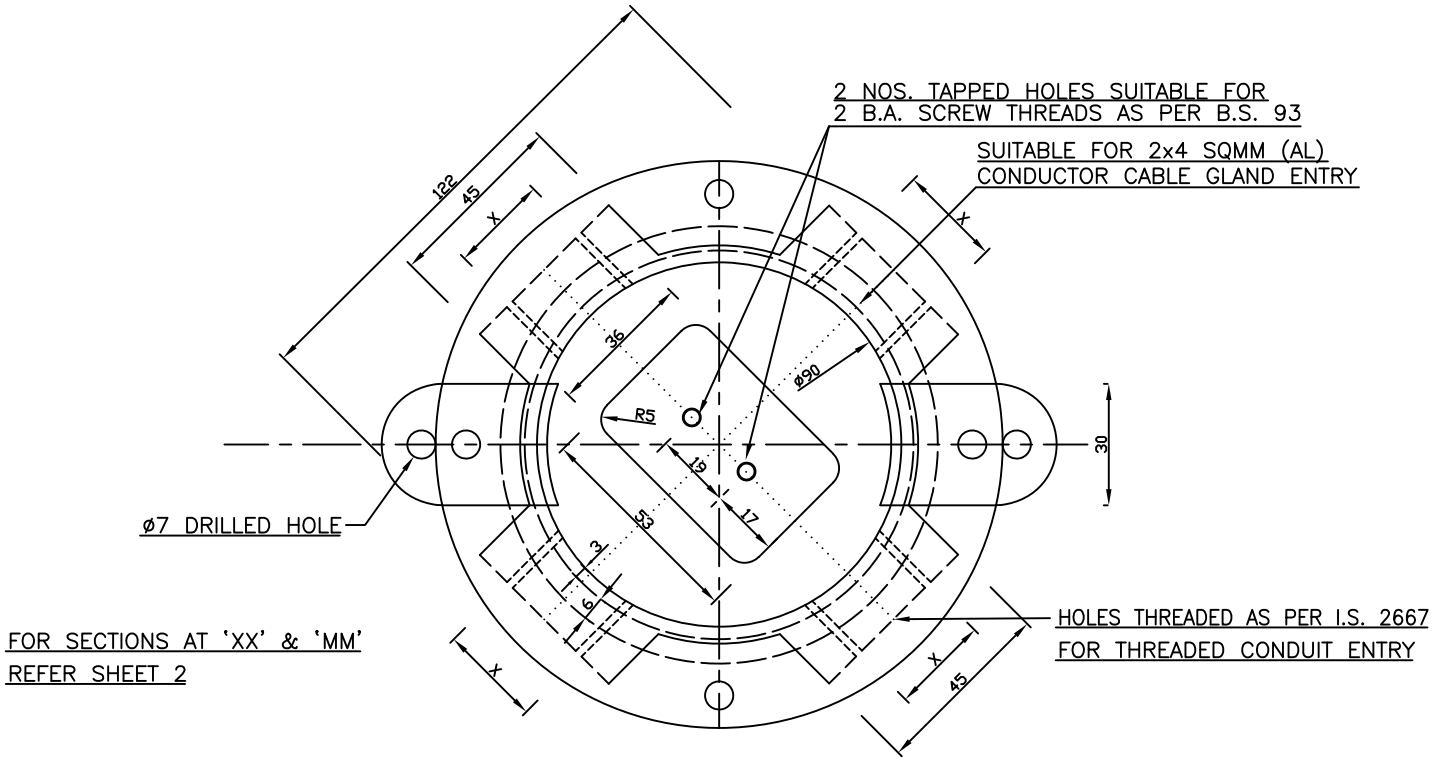

ALUMINIUM JUNCTION BOX (ASSEMBLY)

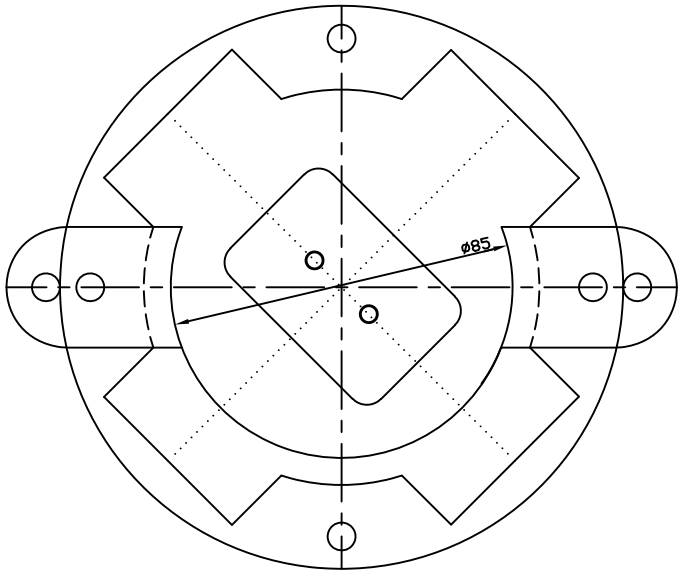

BOTTOM PLAN

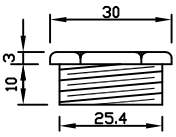

* CABLE GLAND DIMENSIONS FOR 2x4 SQMM (AL) CONDUCTOR CABLE										
SL. NO.	SIZE OF CABLE CORE x SQMM (ARMOUE CABLE)	O. D. OF CABLE A	DIA. UNDER ARMOUR OF CABLE	INCOMING DIA. OF COM. RING B	OUTGOING DIA. C	T	S	LENGTH L	THREADED NIPPLE TO IS: 1653 D	INSIDE DIA. OF NEOPRENE RING
1	2 x 4	17.5	11.0	18.0	12.0	12	10	28.5	19.0	15.5

* FOR SKETCH REFER PDS:E 541 (SHEET-1)

पी डी आई एल PDIL	ALUMINIUM JUNCTION BOX	PDS: E 547	0
		DOCUMENT NO.	REV.
		SHEET 2 OF 3	

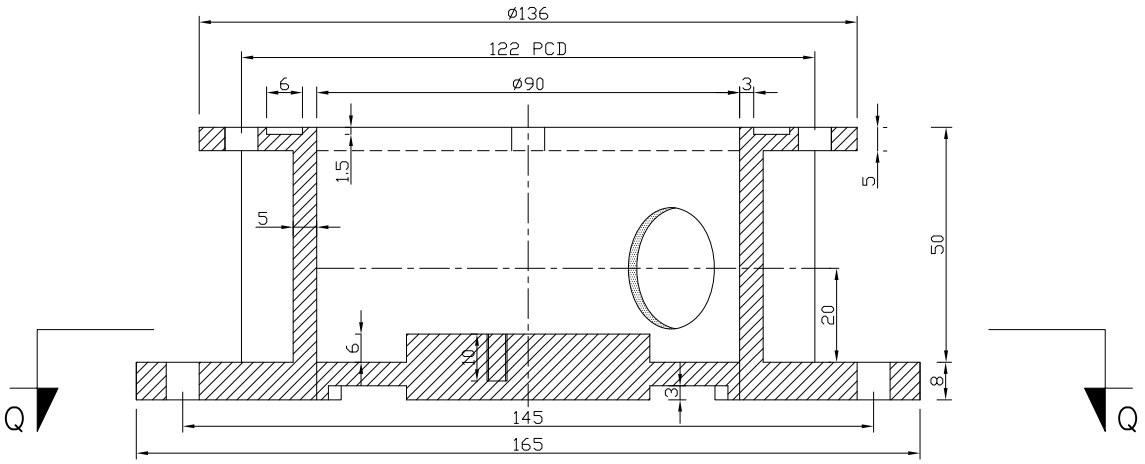

SECTIONAL ELEVATION AT ''XX''

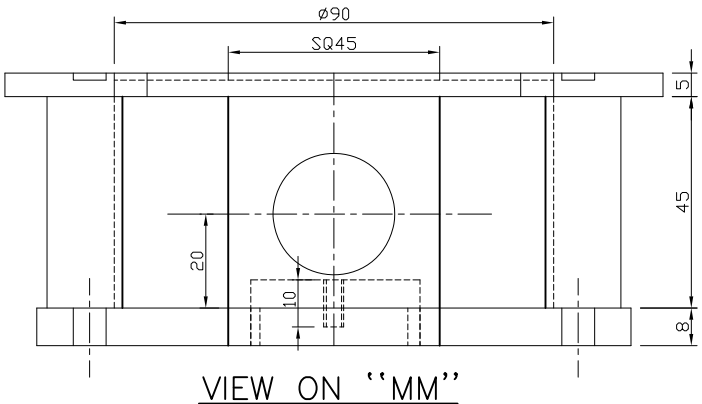

VIEW ON ''MM''

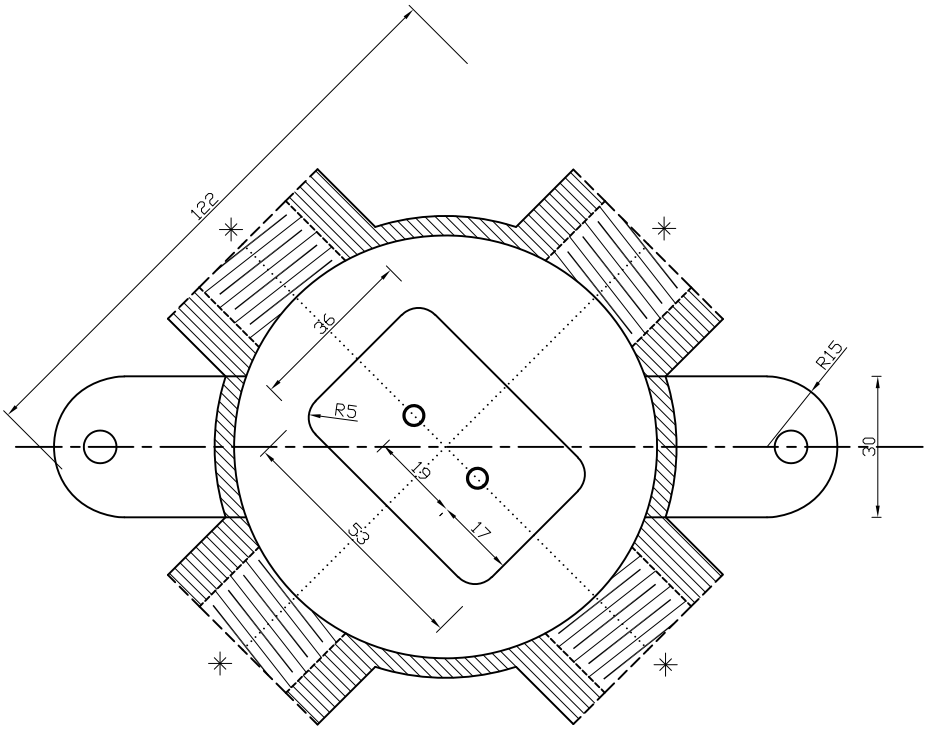

SECTION AT 'QQ'

NOTE:-

1). ✳ THREADING SHOULD BE SUITABLE FOR ELECTRICAL CONDUIT THREADS ON CABLE GLAND AS SHOWN IN PDS: E 541.

पी डी आई एल PDIL	ALUMINIUM JUNCTION BOX	PDS: E 547	0
		DOCUMENT NO.	REV.
		SHEET 3 OF 3	

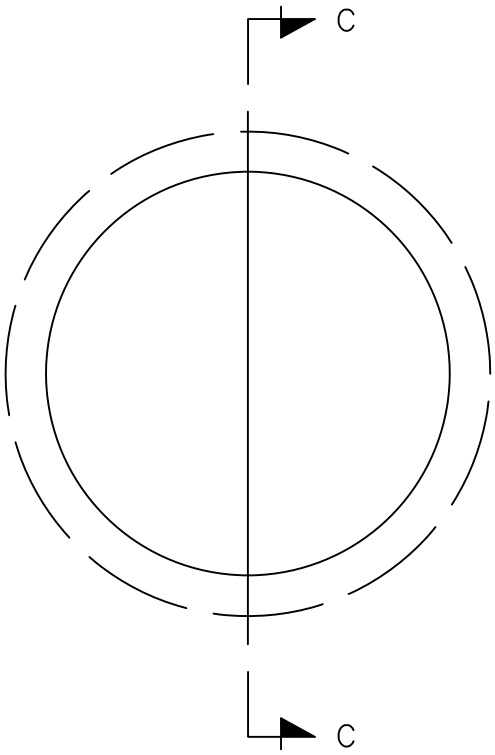

PLAN

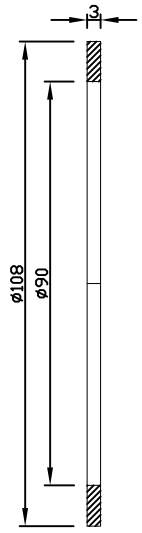

SECTION AT ''CC''

RUBBER INSERTION GASKET

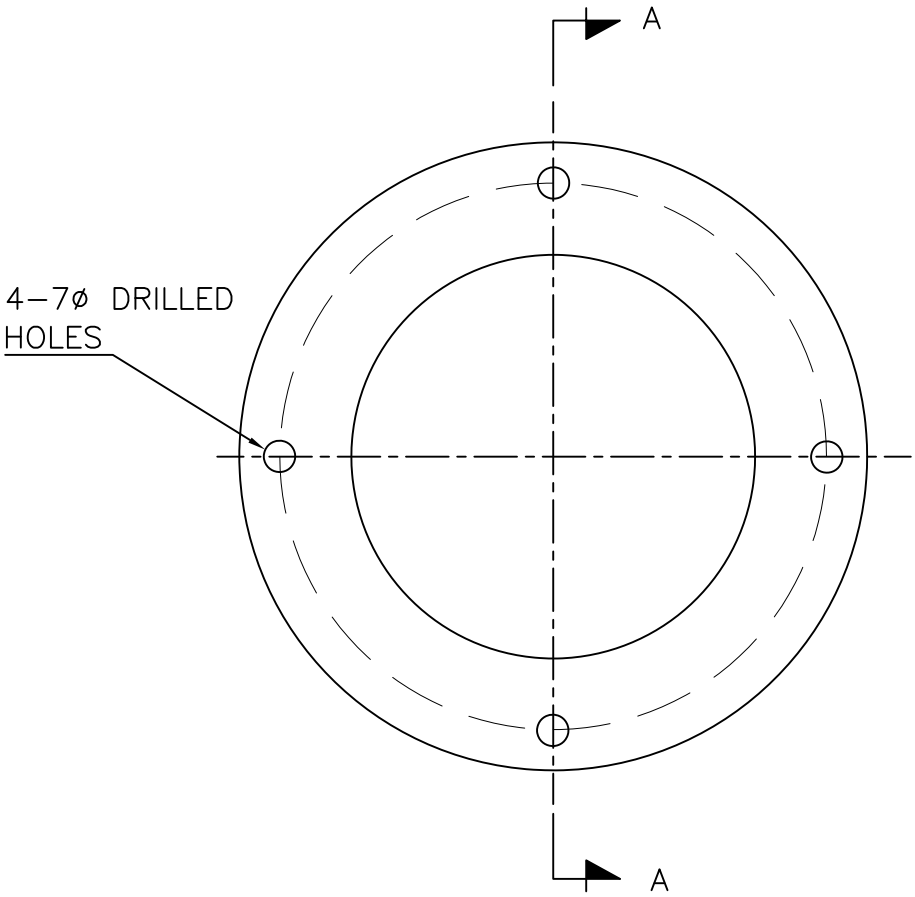

PLAN

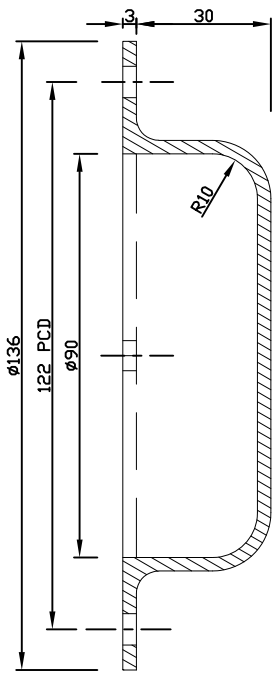

SECTION AT ''AA''

ALUMINIUM DOMED COVER

पी डी आई एल PDIL	TERMINAL BLOCK FOR ALUMINIUM JUNCTION BOX (SIX TERMINALS)	PDS: E 557	0
		DOCUMENT NO.	REV.
		SHEET 1 OF 1	

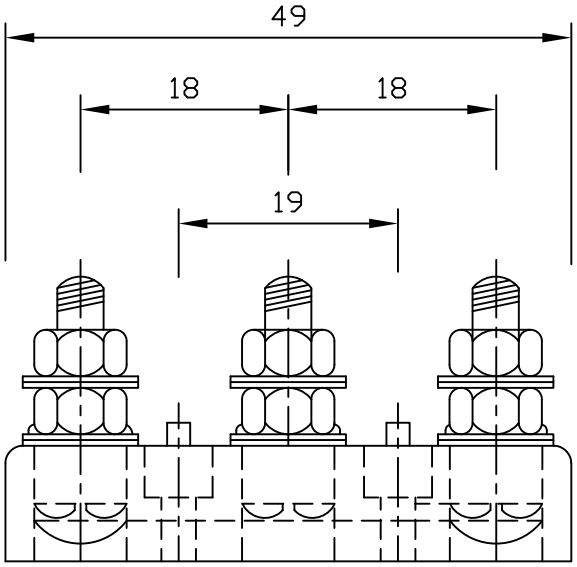

ELEVATION

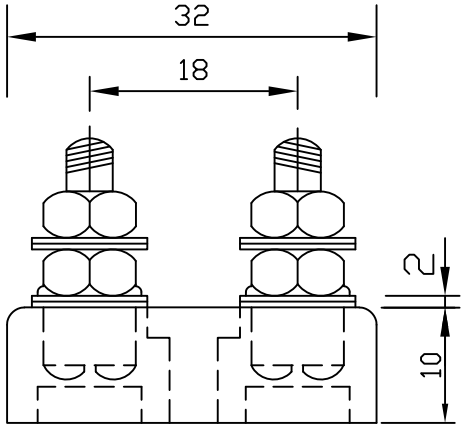

END VIEW

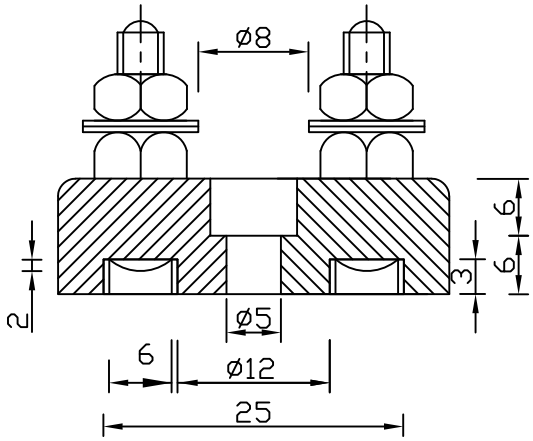

SECTION AT A-A

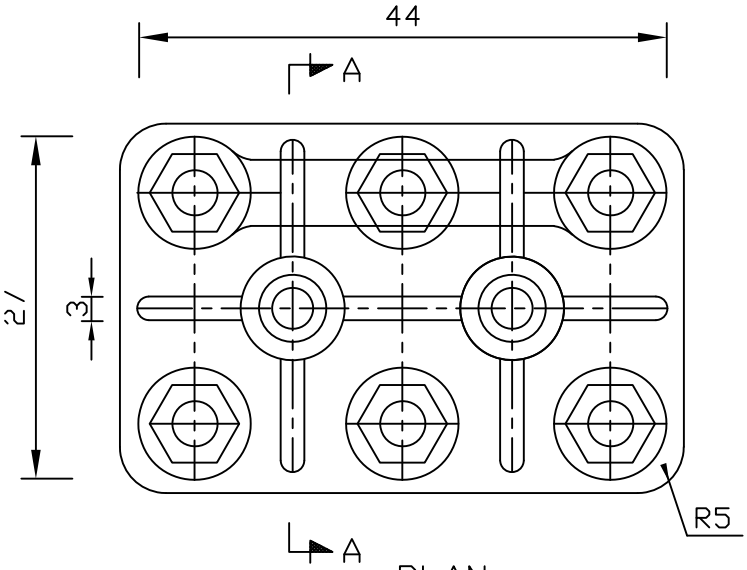

PLAN

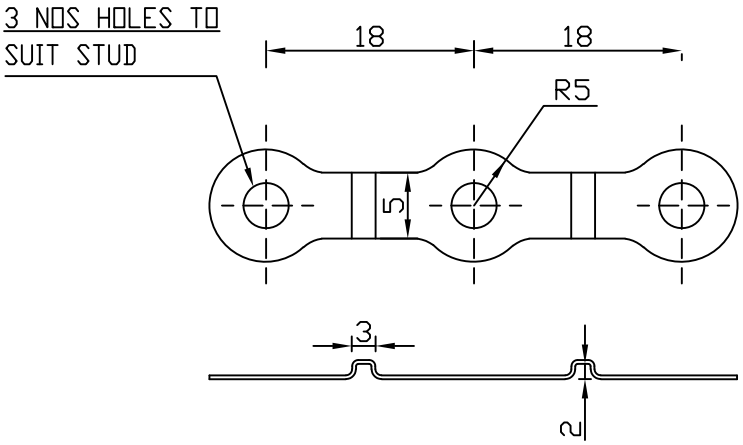

2 NOS LINKS CADMIUM PLATED

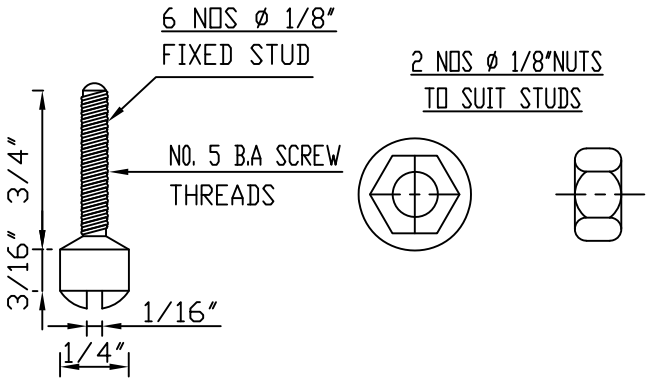

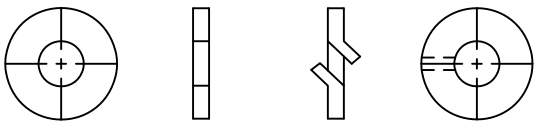

24 NOS WASHERES TO SUIT STUDS

6 NOS SPRING WASHERES TO SUIT STUDS

NOTES :

1. STUDS , NUTS & WASHERS ARE BRASS CADMIUM PLATED.
2. ALL DIMENSIONS ARE IN MM UNLESS OTHER WISE STATED.

SL. No.	EQUIPMENT TO BE EARTHED	FAULT LEVEL (MVA)	G.I.STRIPS/WIRES			ALUMINIUM					REMARKS
			MIN.SIZE (mm²)	SIZE TO BE USED (mm²)	SYMBOL	MIN.SIZE (mm²)	STRIPS/WIRES SIZE TO BE USED (mm²)	STRIPS/WIRES SYMBOL	1.1kv PVC SINGLE CORE CABLE SIZE (mm²)	1.1kv PVC SINGLE CORE CABLE SYMBOL	
1A.	FOR PLANTS HAVING SWITCHYARDS/ GENERATING STATION										
I.	SWITCH YARD EQUIPMENT,GENERATORS,H.T.SWITCH BOARDS,TRANSFORMERS,MAIN EARTHING GRID, CONNECTION FROM EARTH BUS TO EARTHING GRID.	750 AT 11KV	706	2-50x8	2 (2)	491	2-38.1x6.35=484	2 (12)	500	21	AS PER CLAUSE 17.3.2 OF IS:3043
II.	SWITCH YARD EQUIPMENT,GENERATORS,H.T.SWITCH BOARDS,TRANSFORMERS,MAIN EARTHING GRID, CONNECTION FROM EARTH BUS TO EARTHING GRID.	500 AT 11KV 300 AT 6.6KV 150 AT 3.3KV	471	60x8	1	328	50.8x6.35=323	11	400	22	-DO-
III.	SWITCH YARD EQUIPMENT,GENERATORS,H.T.SWITCH BOARDS,TRANSFORMERS,MAIN EARTHING GRID, CONNECTION FROM EARTH BUS TO EARTHING GRID.	250 AT 6.6KV 125 AT 3.3KV	392	50x8	2	272	50.8x6.35=323	11	300	23	-DO-
IV.	SWITCH YARD EQUIPMENT,GENERATORS,H.T.SWITCH BOARDS,TRANSFORMERS,MAIN EARTHING GRID, CONNECTION FROM EARTH BUS TO EARTHING GRID.	350 AT 11KV 200 AT 6.6KV 100 AT 3.3KV	330 314 314	50x8	2	229 218 218	38.1x6.35=242	12	240	24	-DO-
V.	SWITCH YARD EQUIPMENT,GENERATORS,H.T.SWITCH BOARDS,TRANSFORMERS,MAIN EARTHING GRID, CONNECTION FROM EARTH BUS TO EARTHING GRID.	250 AT 11KV 150 AT 6.6KV 75 AT 3.3KV	235	50x6	3	163	31.75x4.78=152	13	185	25	-DO-
1B	FOR PLANTS WITHOUT SW.YARD/GENERATING STN. H.T.SWITCH BOARDS,TRANSFORMERS,MAIN EARTHING GRID, CONNECTION FROM EARTH BUS TO EARTHING GRID.	ANY FAULT LEVEL AT ANY VOLTAGE	210	50x6	3	120	38.1x3.18=121	14	120	27	AS PER CLAUSE 12.3.2 OF IS:3043
1C	ALL M.V.SWITCH BOARDS		210	50x6	3	120	38.1x3.18=121	14	120	27	AS PER CLAUSE 12.3.2 OF IS:3043
2	H.V. MOTORS		210	50x6	3	120	38.1x3.18=121	14	120	27	-DO-
3	TRANSFOMER NEUTRALS		–	–	–	120	–		150	26	–
4	M.V. MOTORS RATED 75KW & ABOVE		210	50x6	3	120	38.1x3.18=121	14	120	27	AS PER CLAUSE 12.3.2 OF IS:3043
5	M.V. MOTORS ABOVE 30KW &LESS THAN 75KW		175	35x6	4	93	31.75x3.18=101	15	95	28	-DO-

पी डी आई एल PDIL

EARTHING CONDUCTOR DETAILS

PDS: E 602

DOCUMENT NO.

REV. 0

SHEET 1 OF 2

SL. No.	EQUIPMENT TO BE EARTHED	FAULT LEVEL (MVA)	G.I.STRIPS/WIRES			ALUMINIUM					REMARKS
			MIN.SIZE (mm^2)	SIZE TO BE USED (mm^2)	SYMBOL	MIN.SIZE (mm^2)	STRIPS/WIRES		1.1kv PVC SINGLE CORE CABLE		
							SIZE TO BE USED (mm^2)	SYMBOL	SIZE (mm^2)	SYMBOL	
6	M.V.MOTORS ABOVE 5.5KW & LESS THAN 30KW 63A SW.SOCKETS,BATTERY CHARGERS,LIGHTING SUB-DIST.BDS.,D.C.BDS.		44	25x6	5	25	2 SWG=38.6	17	25	29	AS PER CLAUSE 12.3.2 OF IS:3043
7	M.V.MOTORS RATED 5.5KW & BELOW		7	8 SWG= 13	6	5	10 SWG=8.3	18	6	30	-DO-
8	ALL MINOR EQUIPMENT RATED FOR 250V & BELOW		–	10 SWG= 8.3	7	–	10 SWG=8.3	18	6	30	
9	NON ELECTRICAL EQUIPMENT,SUCH AS VESSELS STRUCTURES IN HAZARDOUS AREA & LIGHTNING PROTECTION CONDUCTORS		32x6	35x6	4	–	25.4x3.18=81	16	–	–	AS PER IS:2309

NOTE:-EARTHING CODUCTOR SIZES FOR ITEMS AT SL.No.4,5,6 & 7 SHOULD BE CHOSEN AS HALF THE POWER CABLE SIZES ACTUALLY USED.

पी डी आई एल PDIL

EARTHING CONDUCTOR DETAILS

PDS: E 602

DOCUMENT NO.

REV. 0

SHEET 2 OF 2

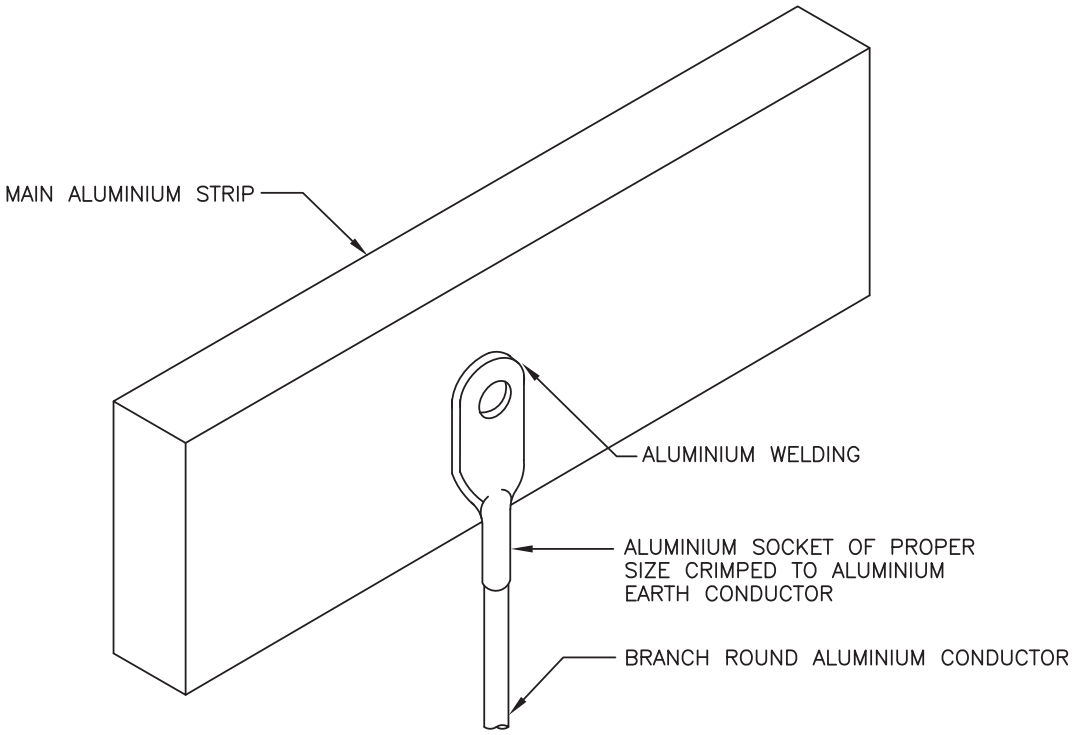

' T ' JOINT ALUMINIUM STRIP TO ROUND ALUMINIUM CONDUCTOR

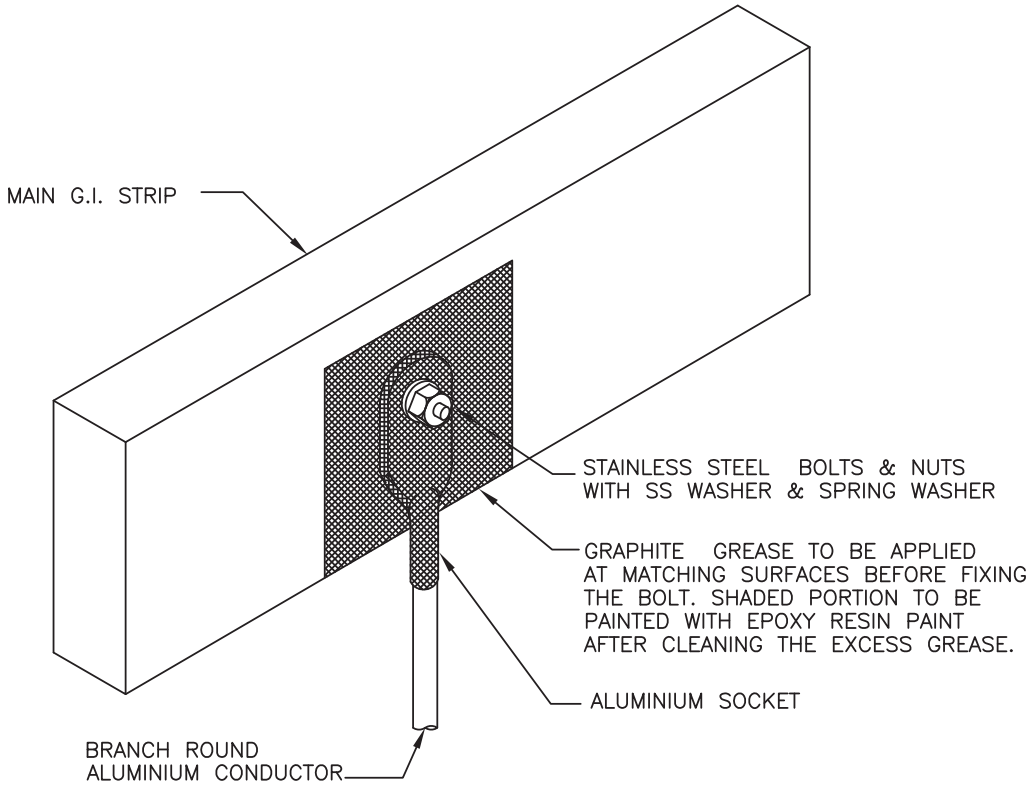

' T ' JOINT G.I. STRIP TO ROUND ALUMINIUM CONDUCTOR

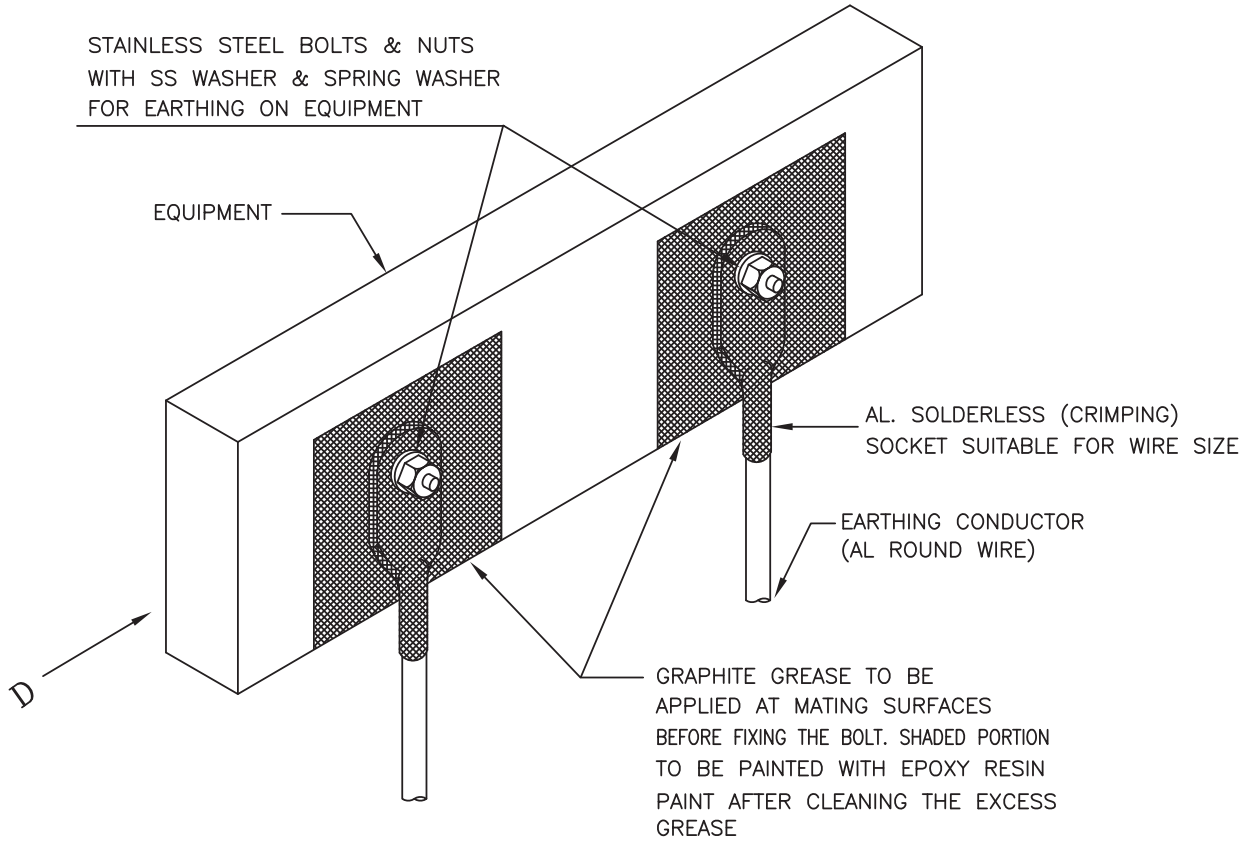

ARRANGEMENT OF DOUBLE EARTH CONNECTIONS TO EQUIPMENT

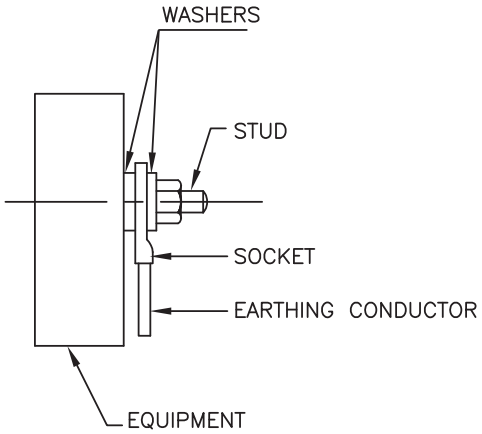

VIEW FROM – D

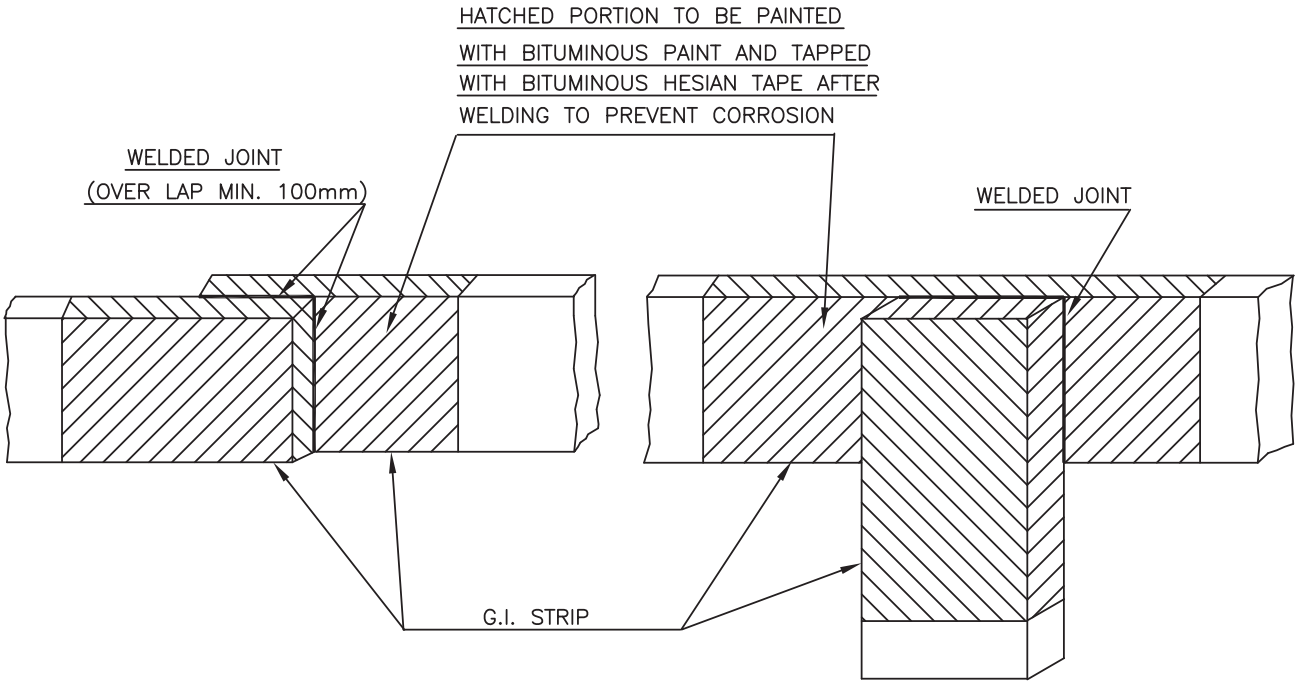

STRAIGHT JOINT G.I TO G.I. STRIP

" T " JOINT G.I. TO G.I. STRIP

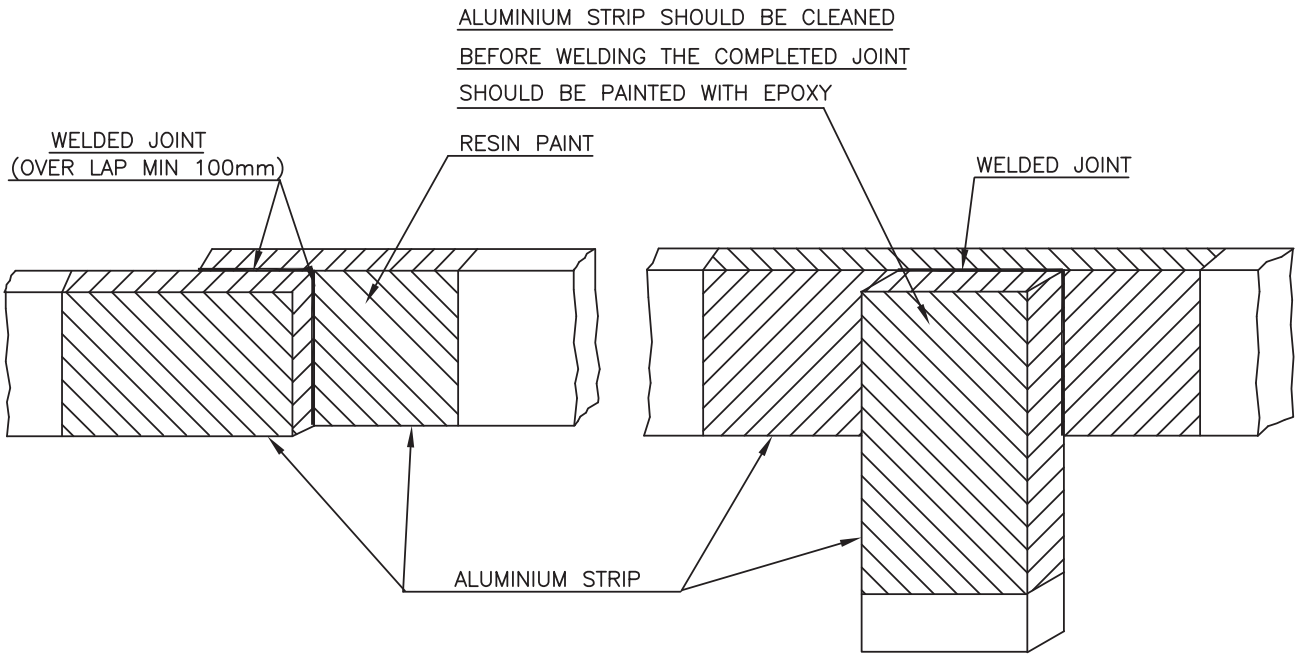

STRAIGHT JOINT AL. TO AL. STRIP

" T " JOINT AL TO AL STRIP

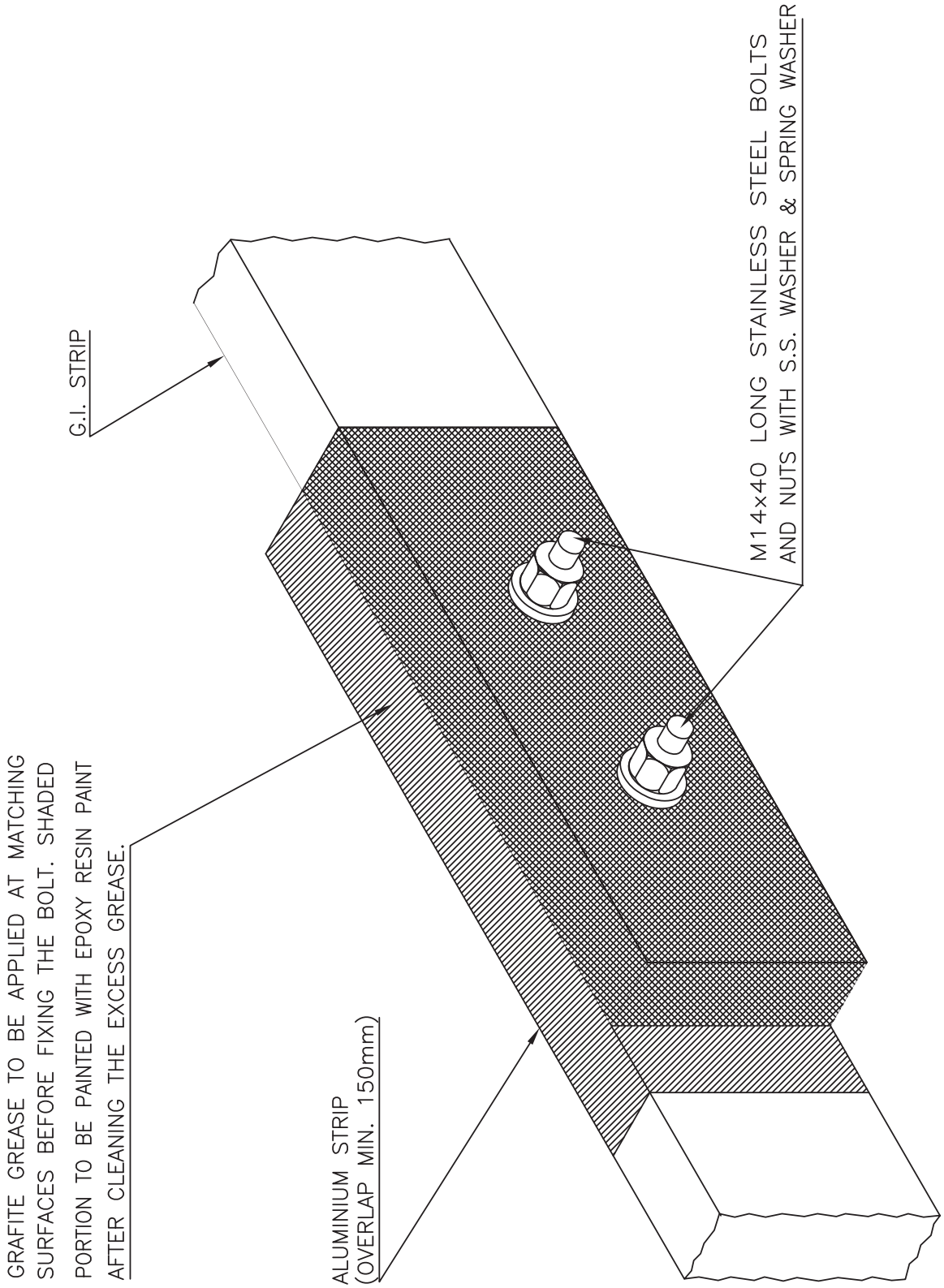

ARRANGEMENT OF LAP JOINT BETWEEN

Al. EARTH STRIP TO G.I. EARTH STRIP

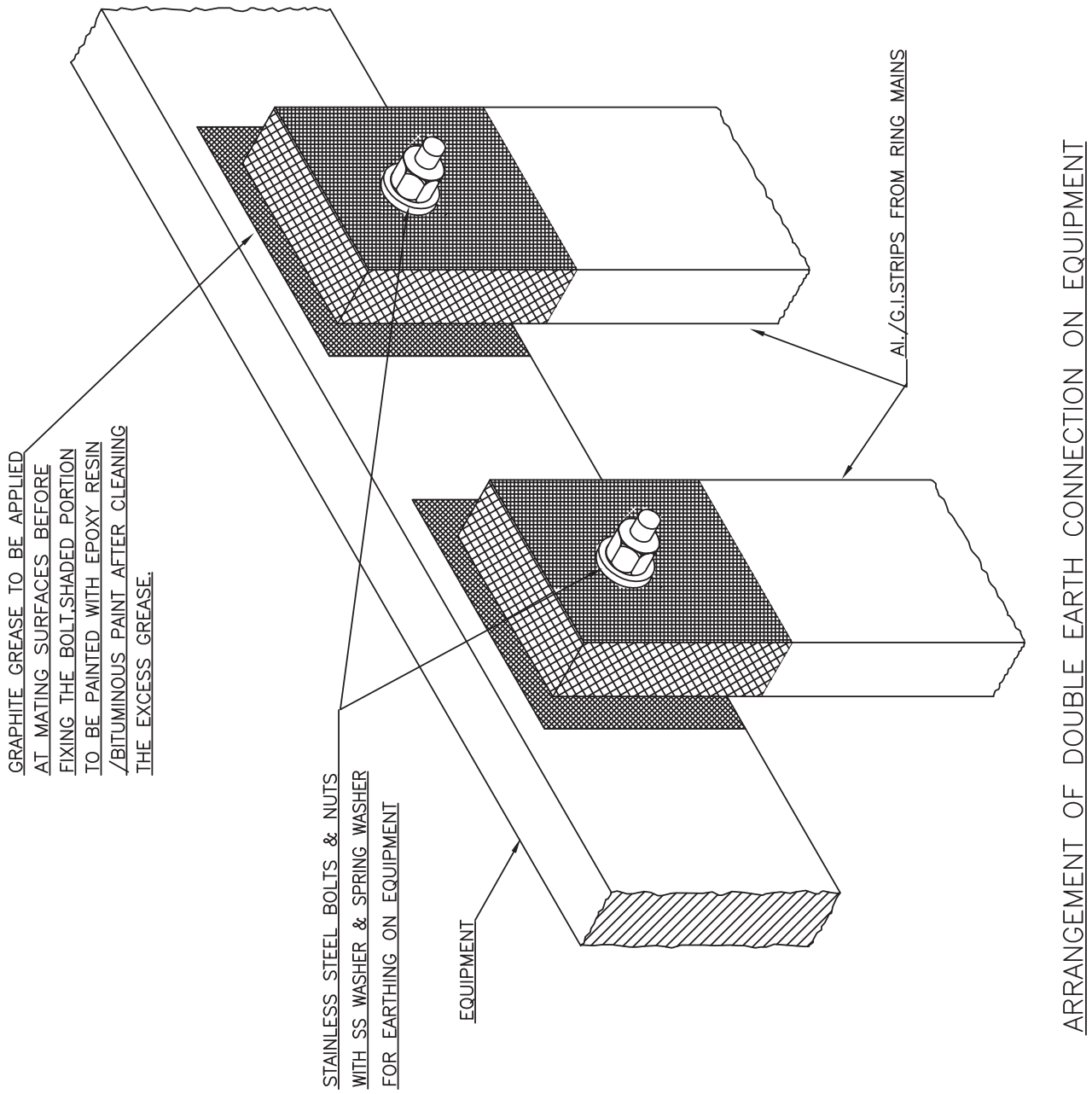

ARRANGEMENT OF DOUBLE EARTH CONNECTION ON EQUIPMENT

NOTE:–

EPOXY RESIN PAINT SHALL BE USED FOR AL STRIP AND BITUMINOUS PAINT FOR G.I.STRIP.

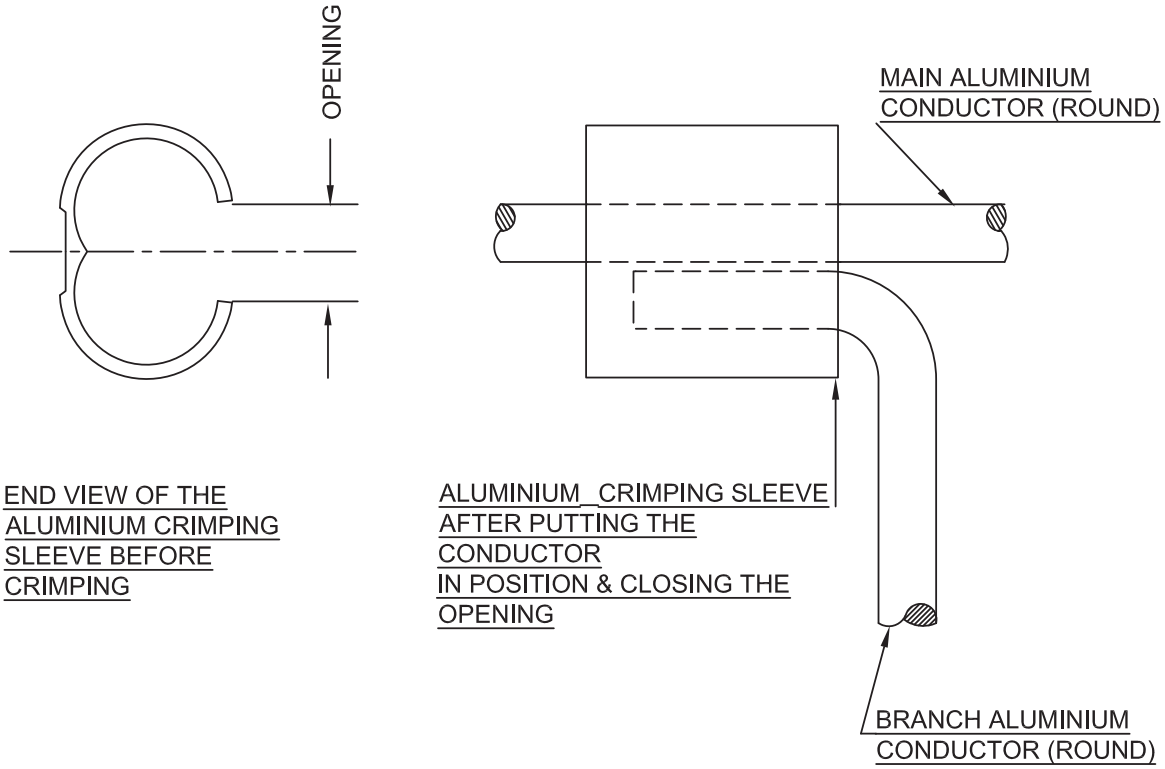

"T" JOINT ROUND ALUMINIUM CONDUCTOR TO ROUND ALUMINIUM CONDUCTOR (CRIMPING TYPE)

NOTE :-

USE CORRECT SIZE OF COMPRESSION DIES.

पी डी आई एल PDIL	TYPICAL DETAILS OF CONNECTIONS IN EARTH PIT	PDS: E 604	0
		DOCUMENT NO.	REV.
		SHEET 1 OF 1	

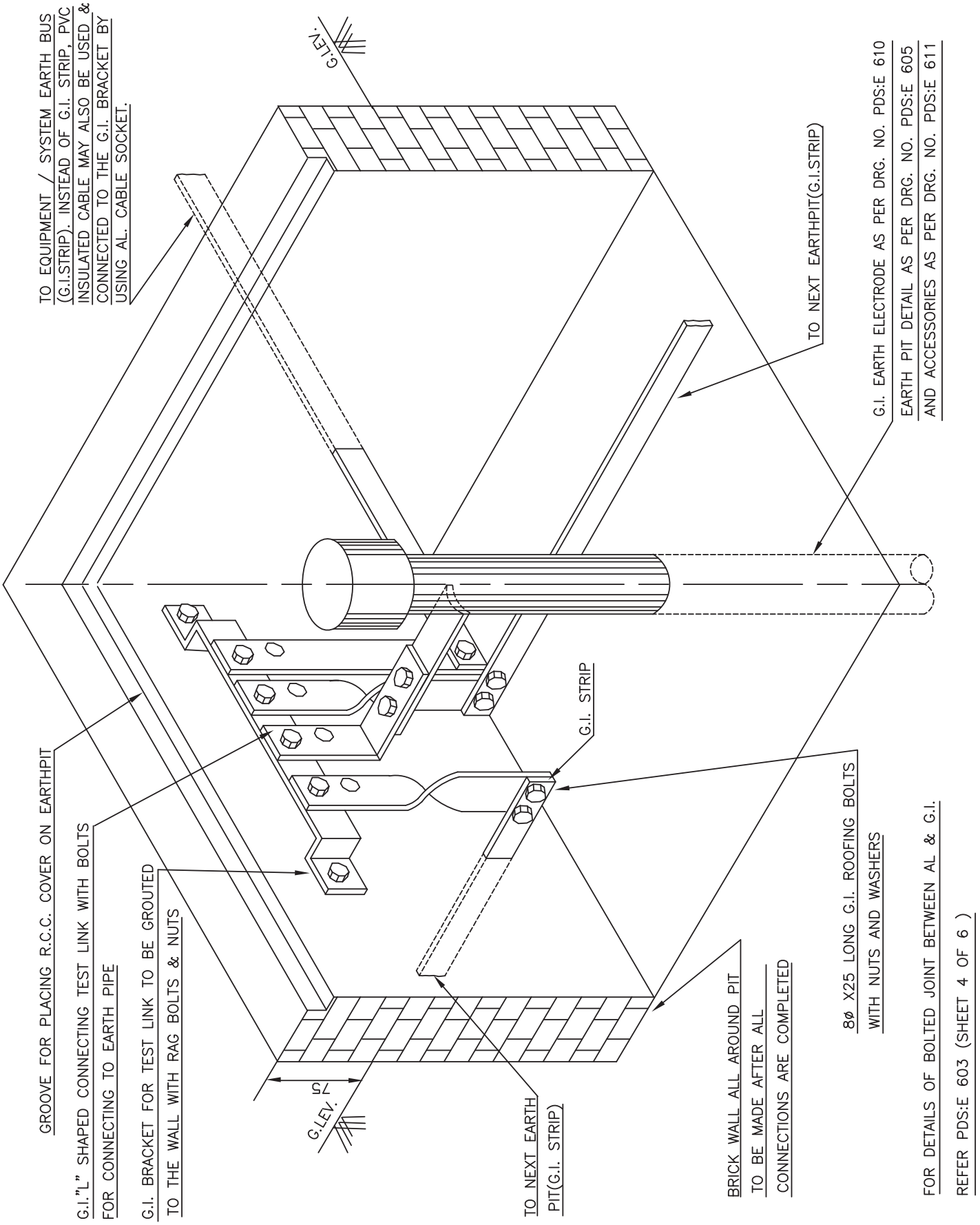

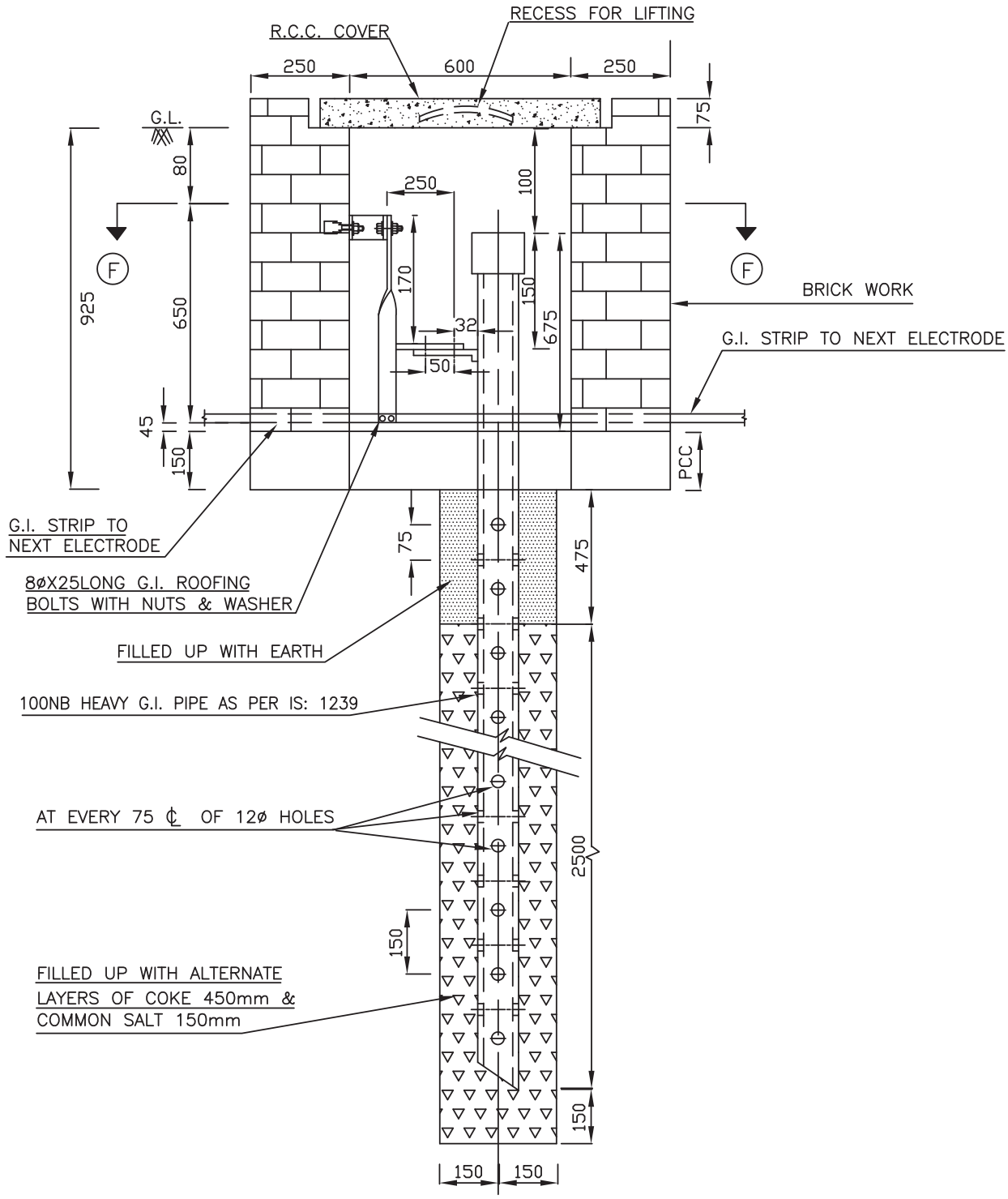

SECTIONAL ELEVATION OF EARTH PIT

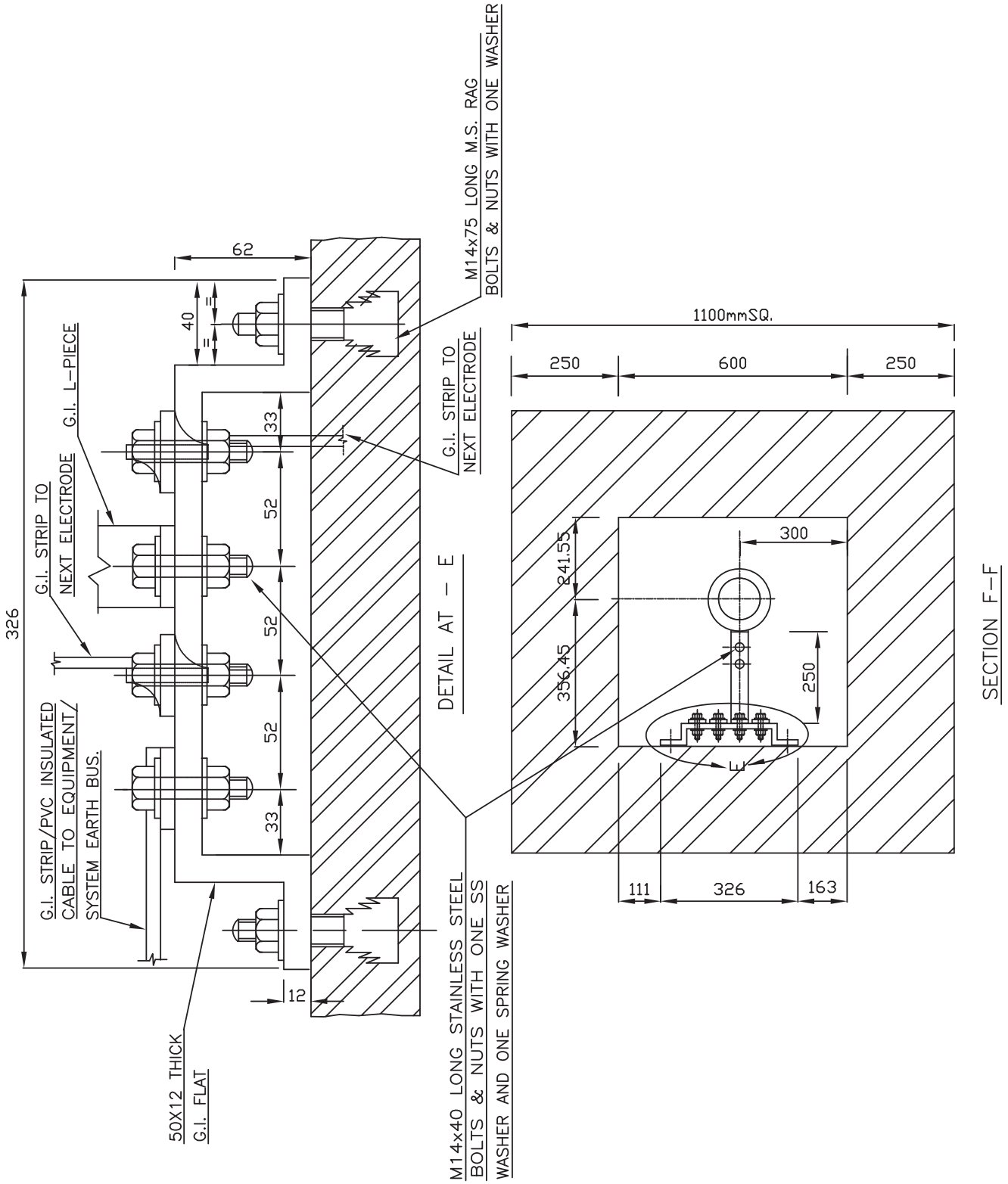
M14x75 LONG M.S. RAG
BOLTS & NUTS WITH ONE WASHER
G.I. STRIP TO
NEXT ELECTRODE
G.I. L-PIECE
G.I. STRIP TO
NEXT ELECTRODE
G.I. STRIP/PVC INSULATED
CABLE TO EQUIPMENT/
SYSTEM EARTH BUS.
50X12 THICK
G.I. FLAT
M14x40 LONG STAINLESS STEEL
BOLTS & NUTS WITH ONE SS
WASHER AND ONE SPRING WASHER
DETAIL AT - E
SECTION F-F
1100mmSQ.
250
600
250
62
40
33
52
52
52
33
326
12
241.55
356.45
300
250
111
326
163

पी डी आई एल PDIL	TYPICAL ARRANGEMENT OF EARTHING FOR MOTOR AND START STOP PUSH BUTTON STATION	PDS: E 606	0
		DOCUMENT NO.	REV.
		SHEET 1 OF 2	

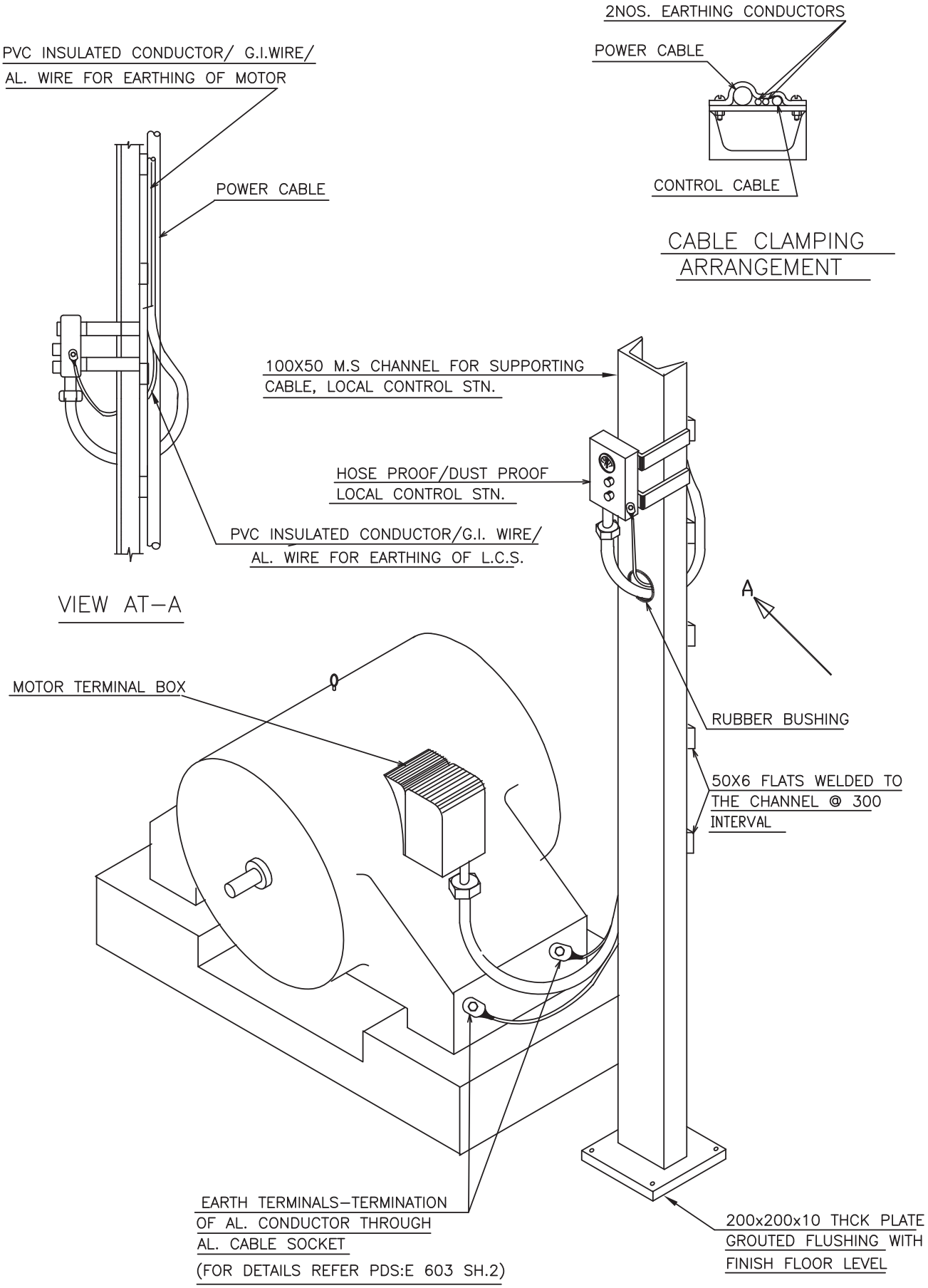

पी डी आई एल PDIL	TYPICAL ARRANGEMENT OF EARTHING FOR MOTOR AND START STOP PUSH BUTTON STATION	PDS: E 606	0
		DOCUMENT NO.	REV.
		SHEET 2 OF 2	

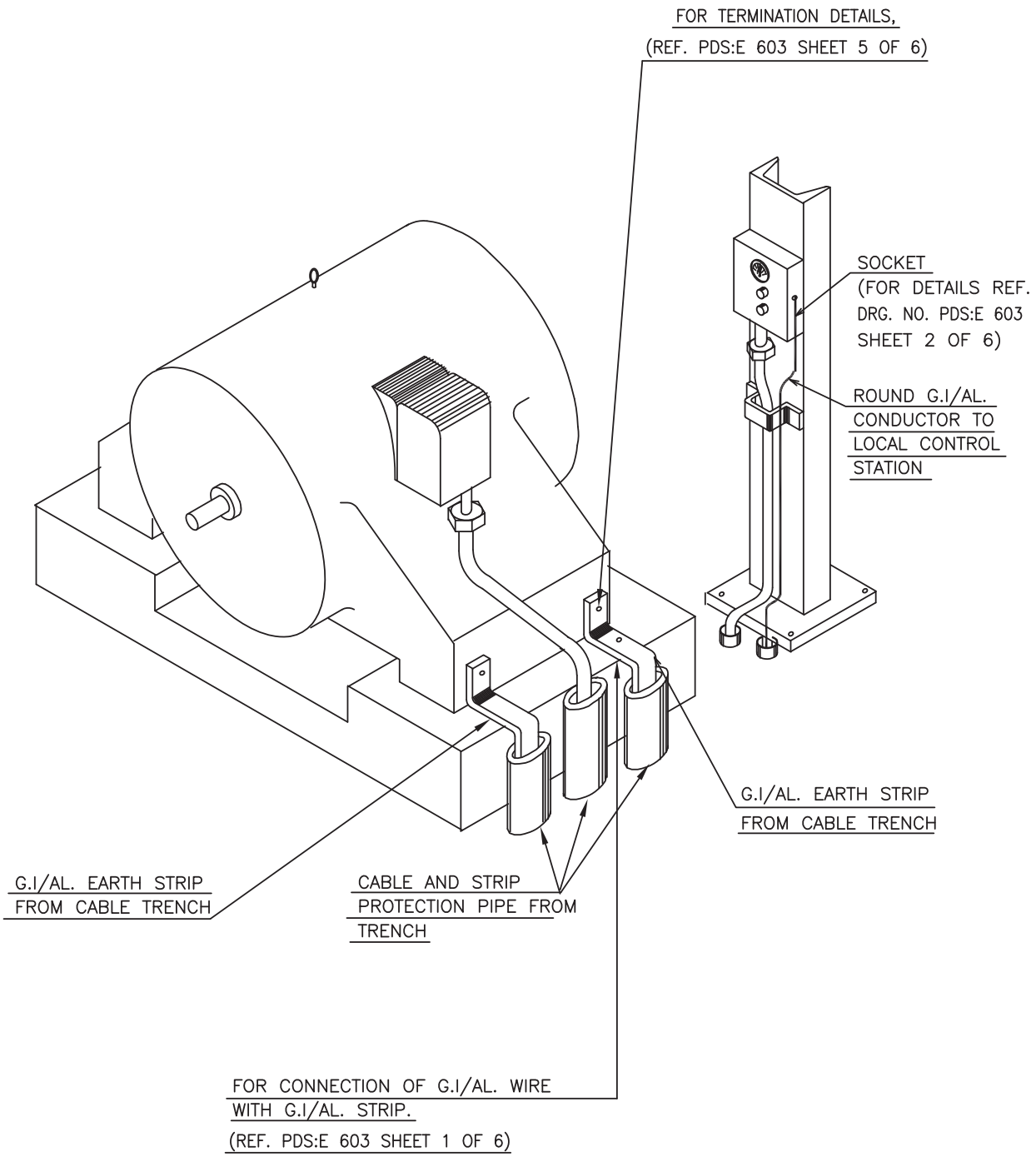

पी डी आई एल PDIL	G.I. CRANK BOLTS & NUTS WITH WASHER FOR LIGHTNING PROTECTION	PDS: E 607	0
		DOCUMENT NO.	REV.
		SHEET 1 OF 1	

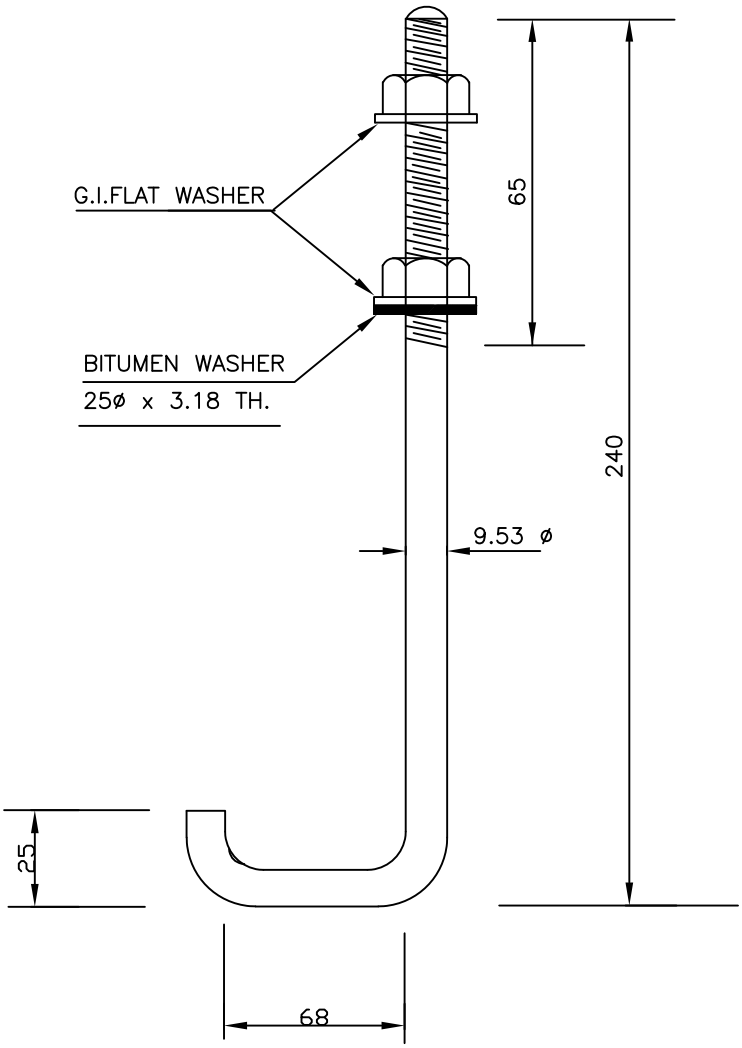

NOTE:–

1. THESE BOLTS SHALL BE USED FOR SUPPORTING & RUNNING OF LIGHTNING CONDUCTOR ON A.C. SHEET ROOF. FOR DETAILS REF. PDS: E 614 (SHEET 3 AND 5 OF 5)
2. ALL DIMENSIONS ARE IN mm

पी डी आई एल PDIL	TYPICAL EARTHING ARRANGEMENT OF RAILS	PDS: E 609	0
		DOCUMENT NO.	REV.
		SHEET 1 OF 1	

FIG NO. 1

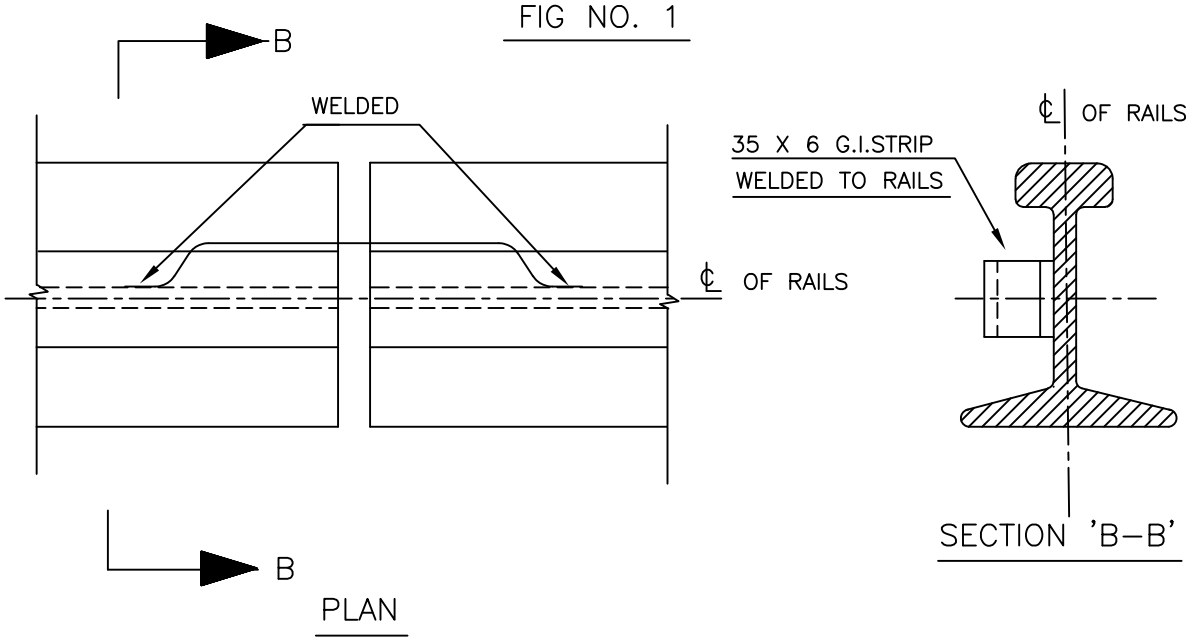

TYPICAL ARRANGEMENT OF EARTH STRIP
PROVIDING EARTH CONTINUITY AT RAILS

FIG NO. 2

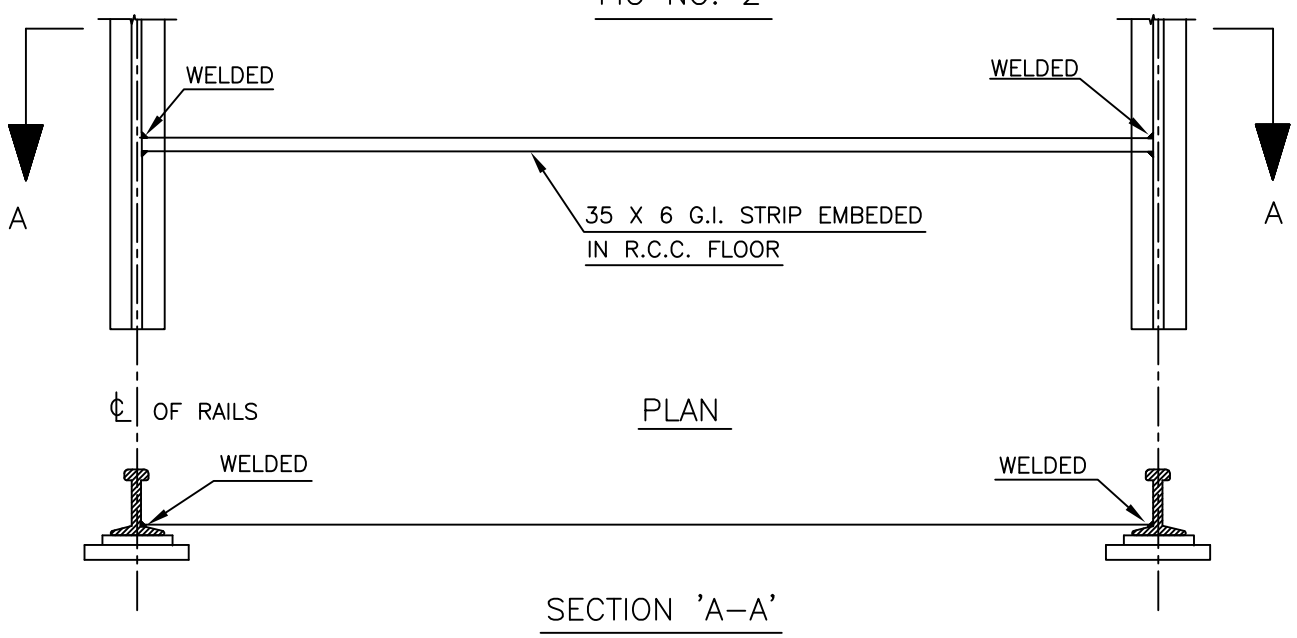

INTER CONNECTION OF EARTHING OF THE TWO
TRACK RAILS

ALL DIMENSIONS ARE IN mm

पी डी आई एल PDIL	3.8M G.I. ELECTRODE FOR EARTHING	PDS: E 610	0
		DOCUMENT NO.	REV.
		SHEET 1 OF 1	

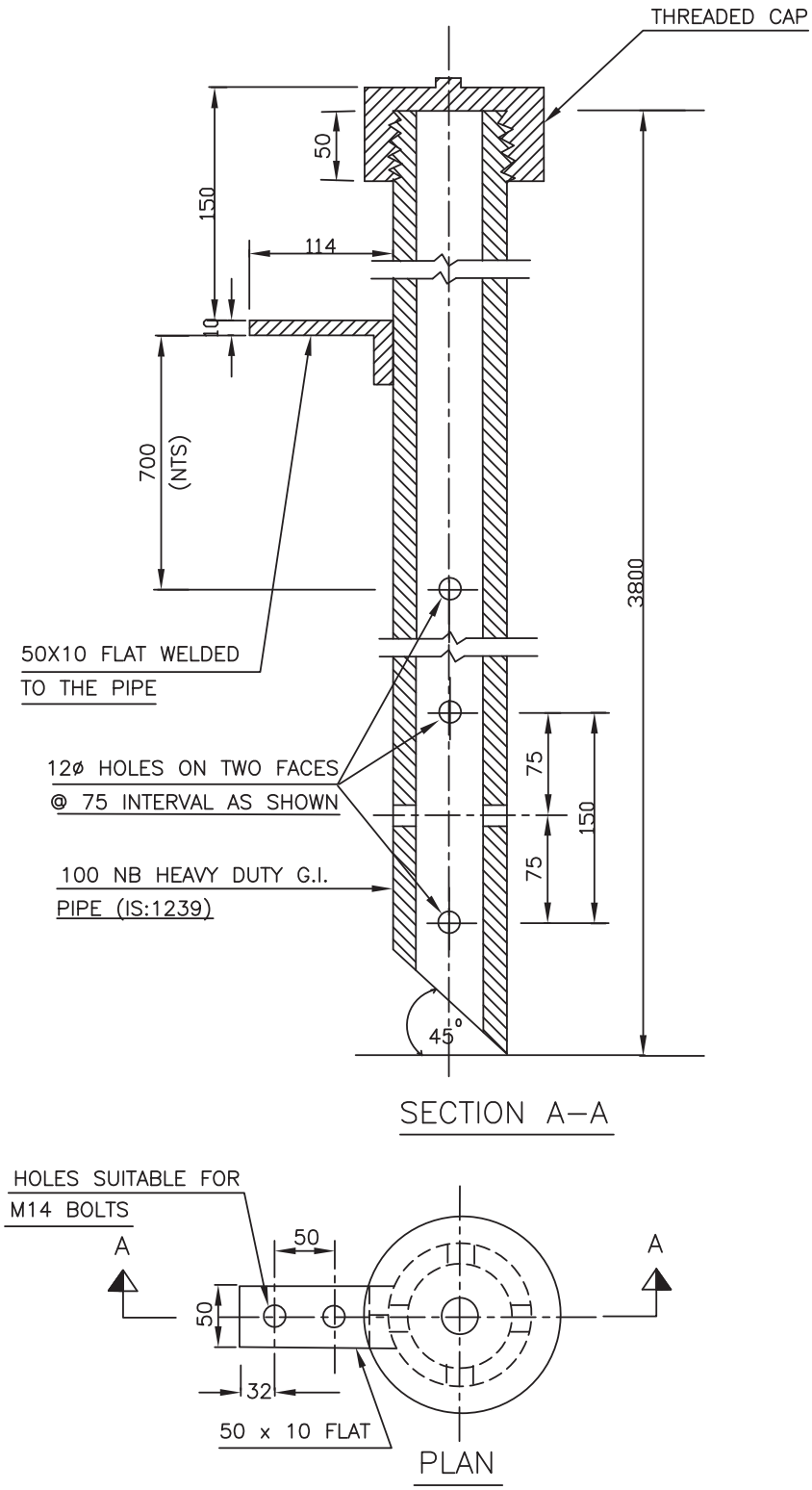

NOTE:–

1. 12ø HOLES WILL BE PROVIDED AT 75mm INTERVAL ON TWO FACES THROUGHOUT THE LENGTH OF PIPE. THE FIRST ONE SHALL START 700mm BELOW THE WELDED FLAT.
2. ALL DIMENSIONS ARE IN mm.

पी डी आई एल PDIL	GI / AL ACCESSORIES FOR EARTH PIT	PDS: E 611	0
		DOCUMENT NO.	REV.
		SHEET 1 OF 2	

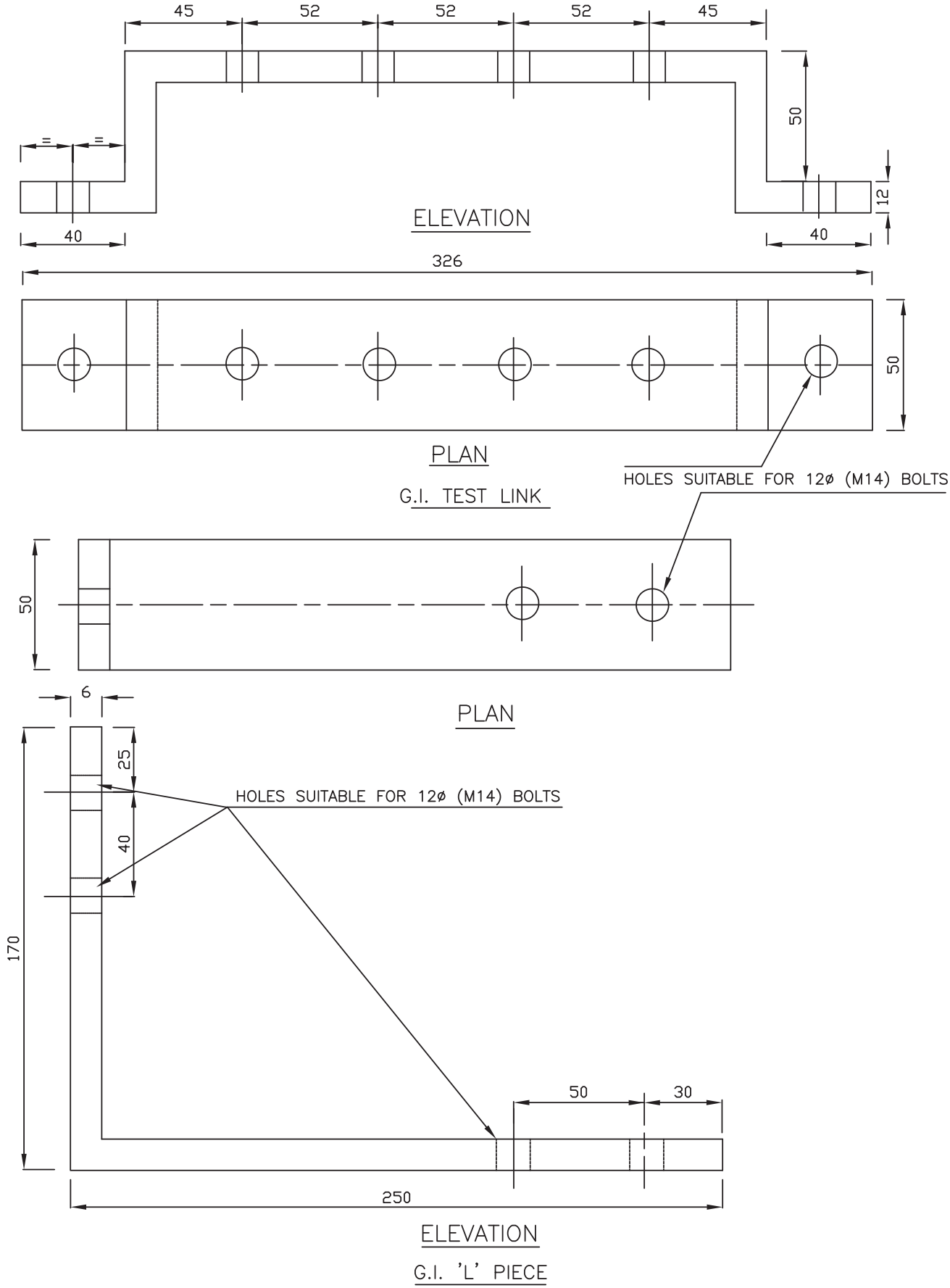

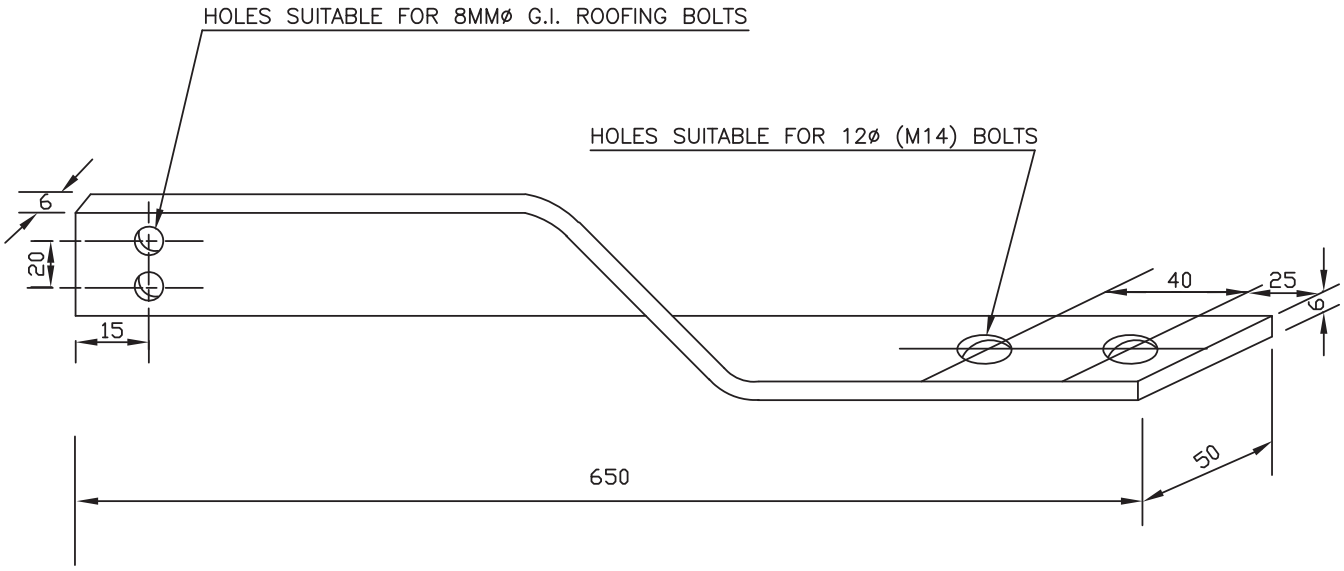

CONNECTING TWISTED ALUMINIUM FLAT PIECE

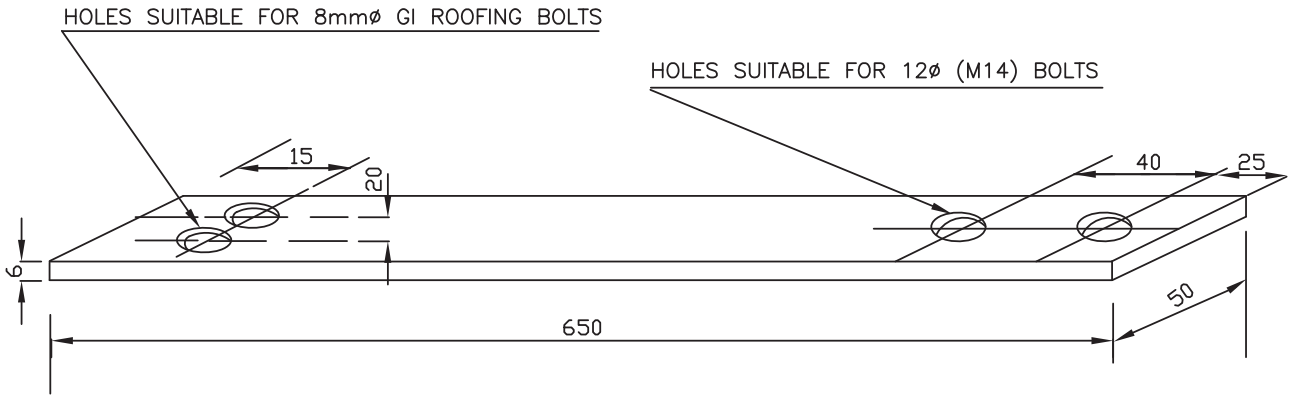

CONNECTING ALUMINIUM / G.I. FLAT PIECE

पी डी आई एल PDIL	TYPICAL EARTHING ARRANGEMENT ACROSS PIPE JOINT/VALVES	PDS: E 612	0
		DOCUMENT NO.	REV.
		SHEET 1 OF 1	

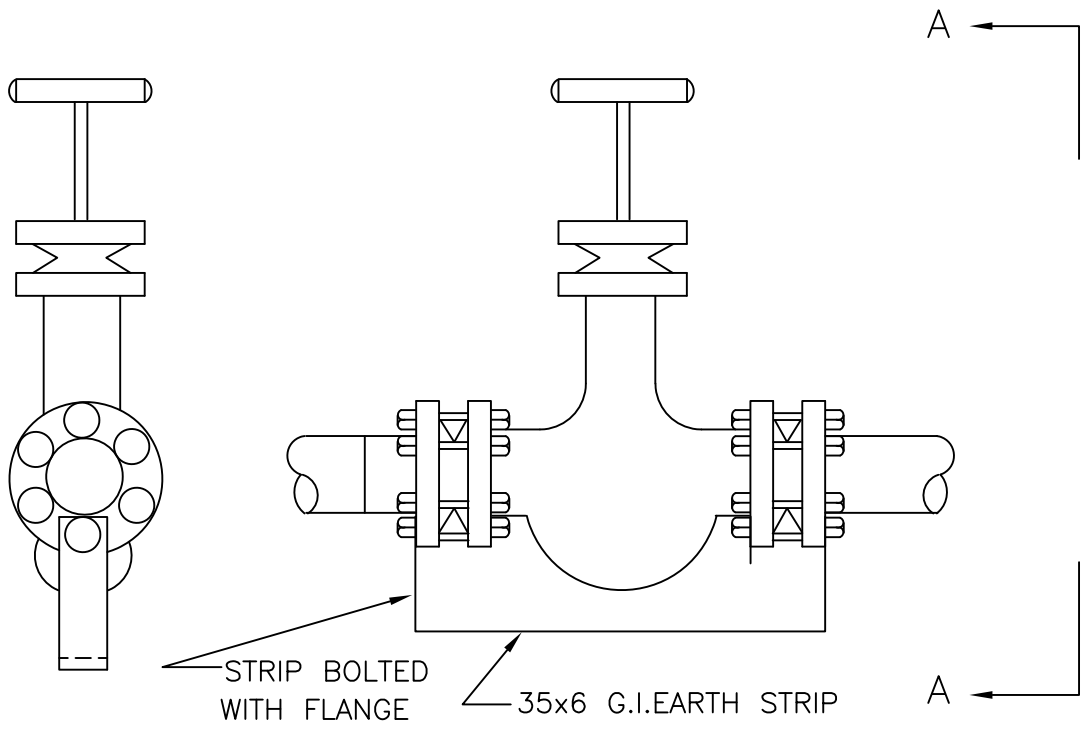

VIEW AT A–A

ELEVATION

ALL DIMENSIONS ARE IN mm

पी डी आई एल PDIL	EARTHING OF STORAGE TANK & VESSEL	PDS: E 613	0
		DOCUMENT NO.	REV.
		SHEET 1 OF 1	

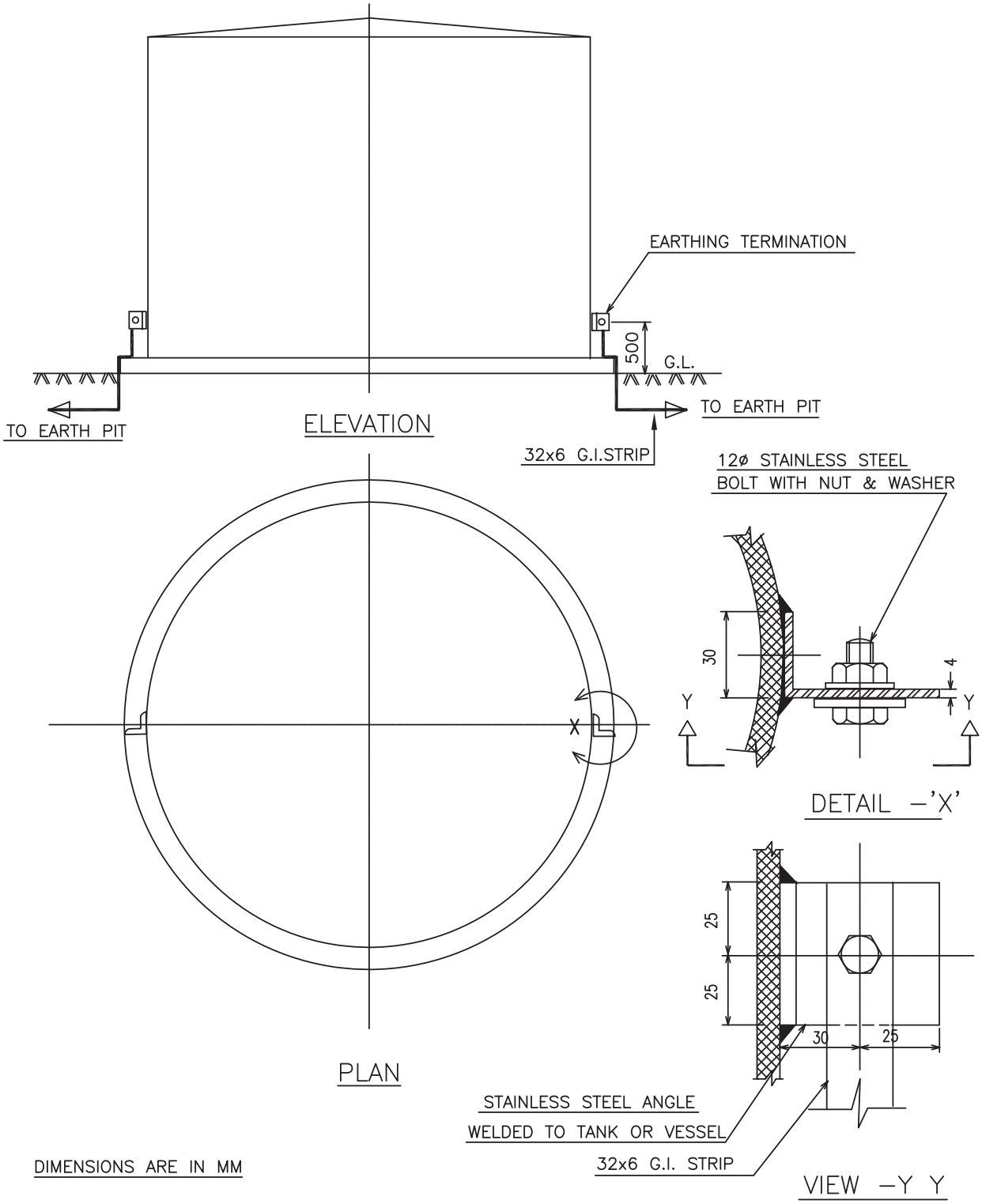

DIMENSIONS ARE IN MM

THE NO. OF EARTH CONDUCTOR SHALL BE AS FOLLOWS

EQUIPMENT WITH ANY DIMENSION	HAZARDOUS AREA	NON–HAZARDOUS AREA
≤ 3 Mts.	1	1
> 3 Mts. ≤ 30 Mts.	2	1
> 30 Mts.	3	2

पी डी आई एल PDIL	FIXING ARRANGEMENT OF AIR TERMINATION AND ROOF/DOWN CONDUCTOR FOR LIGHTNING PROTECTION SYSTEM	PDS: E 614	0
		DOCUMENT NO.	REV.
		SHEET 1 OF 6	

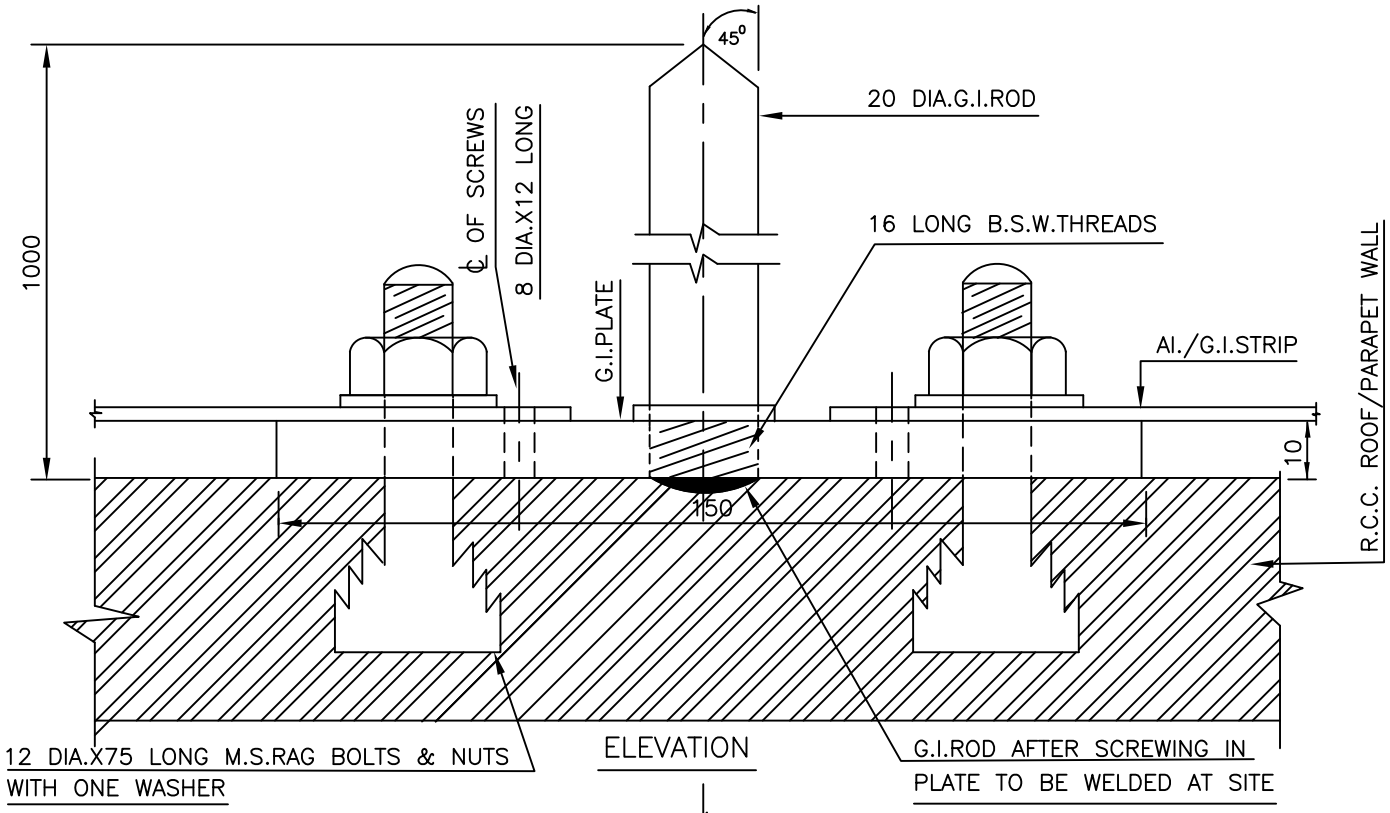

ELEVATION

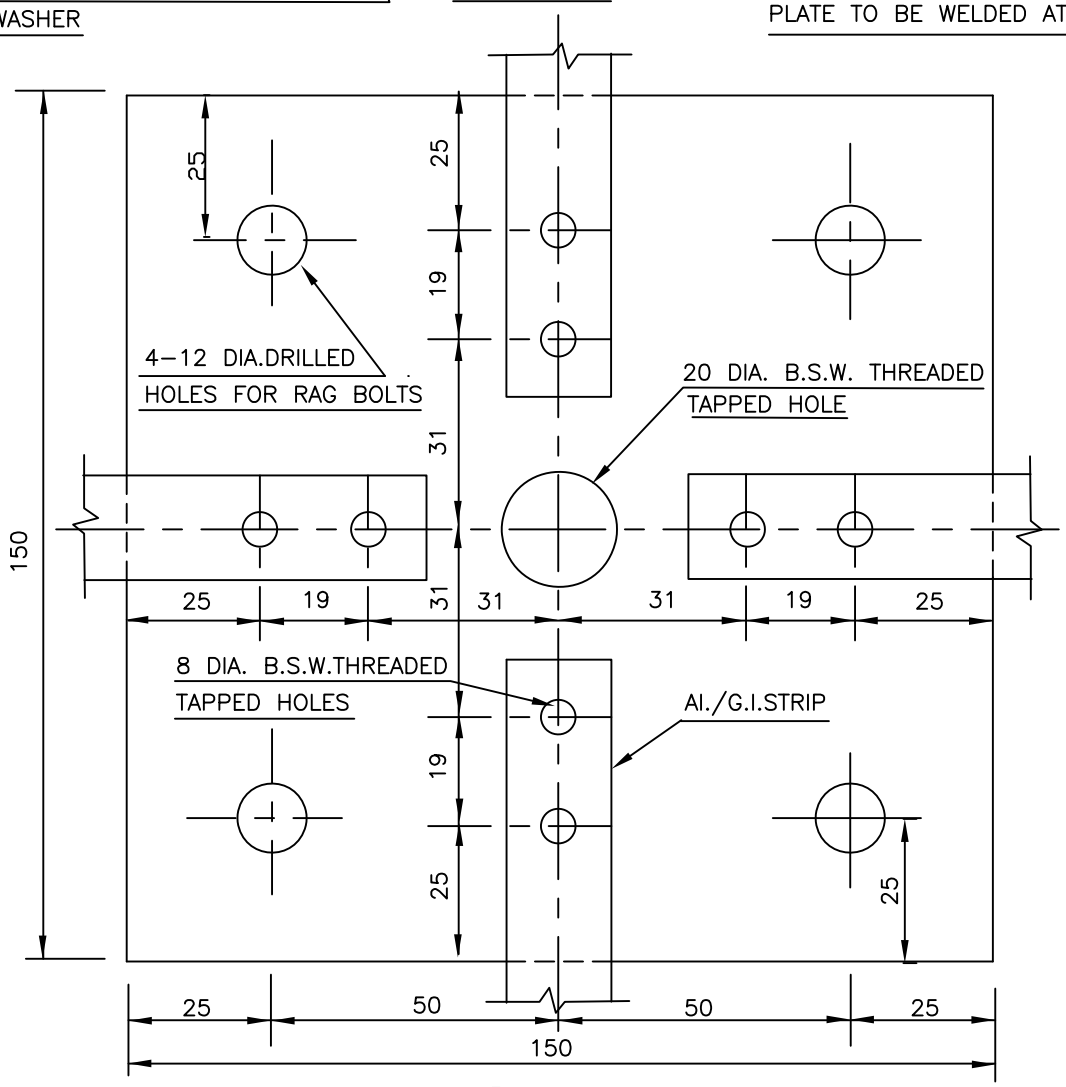

PLAN

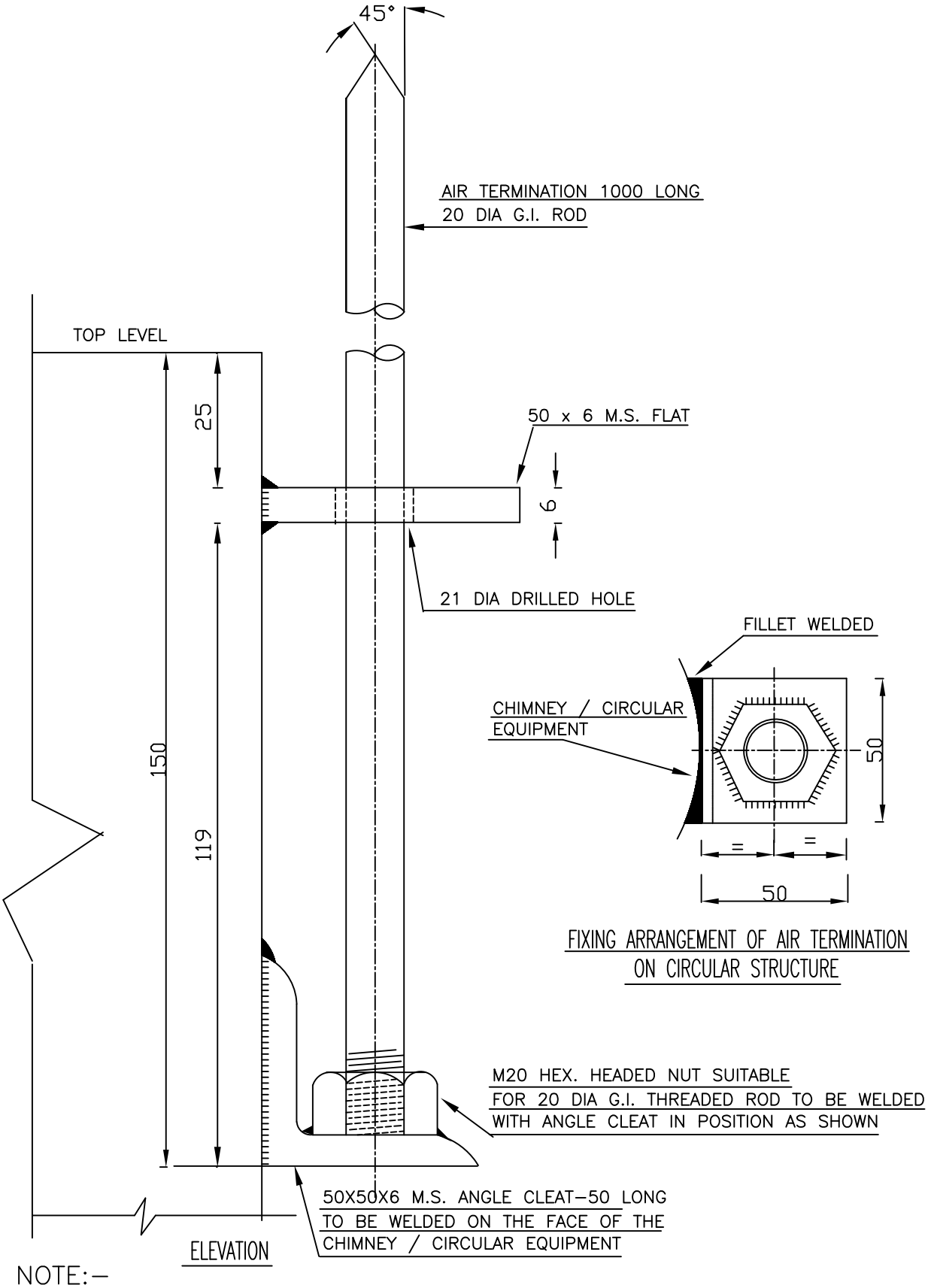

FIXING ARRANGEMENT OF AIR TERMINATION ON CIRCULAR STRUCTURE

NOTE:–

1. FOR DETAILS OF DOWN CONDUCTOR WELDED TO THE BOTTOM OF CHIMNEY / CIRCULAR STRUCTURE REFER PDS:E 613
2. ALL DIMENSIONS ARE IN mm

पी डी आई एल PDIL	FIXING ARRANGEMENT OF AIR TERMINATION AND ROOF/DOWN CONDUCTOR FOR LIGHTNING PROTECTION SYSTEM	PDS: E 614	0
		DOCUMENT NO.	REV.
		SHEET 3 OF 6	

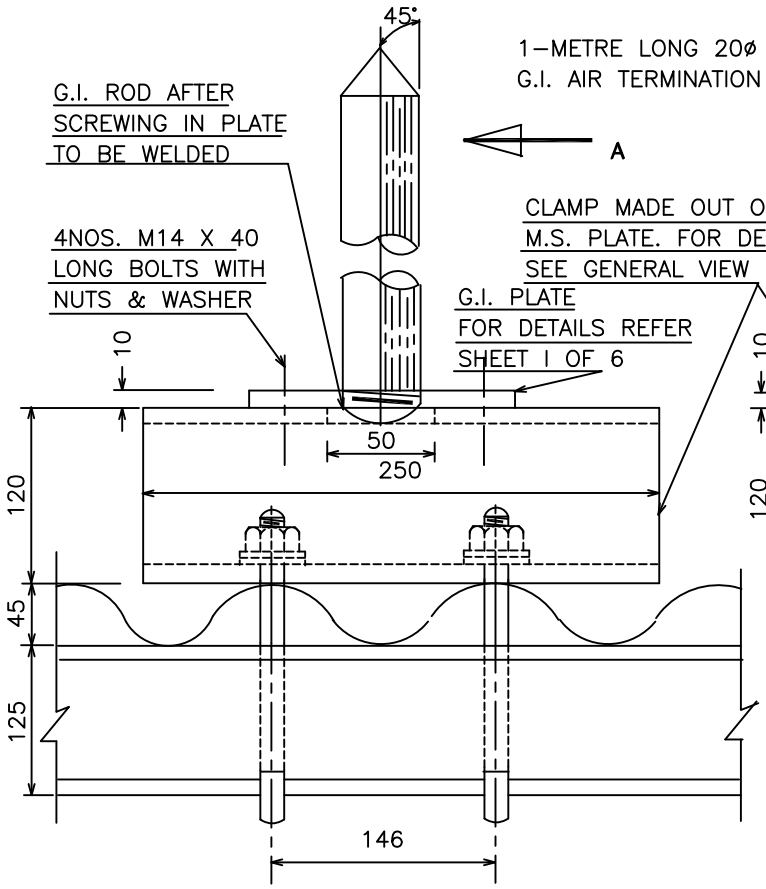

FIXING ARRANGEMENT OF AIR TERMINATION ON A.C.SHEET

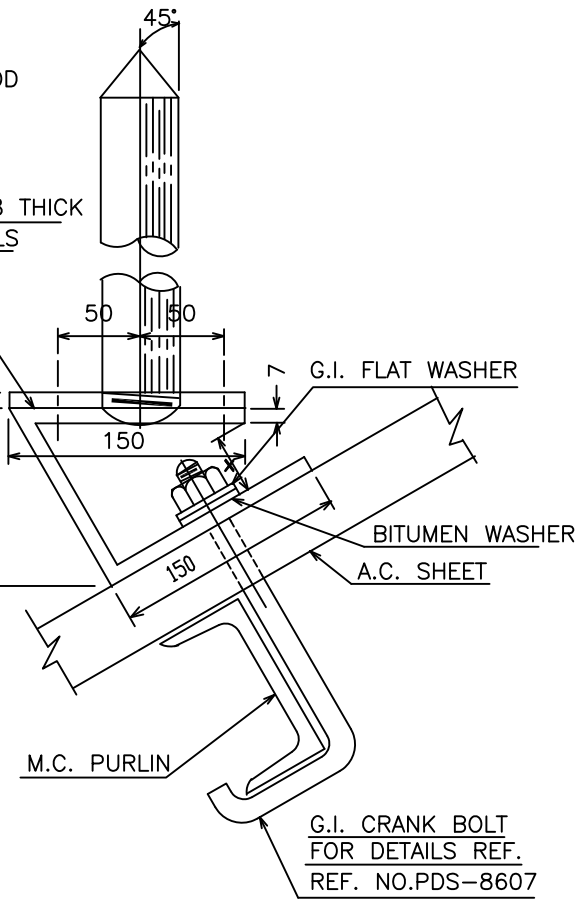

SIDE VIEW AT-A

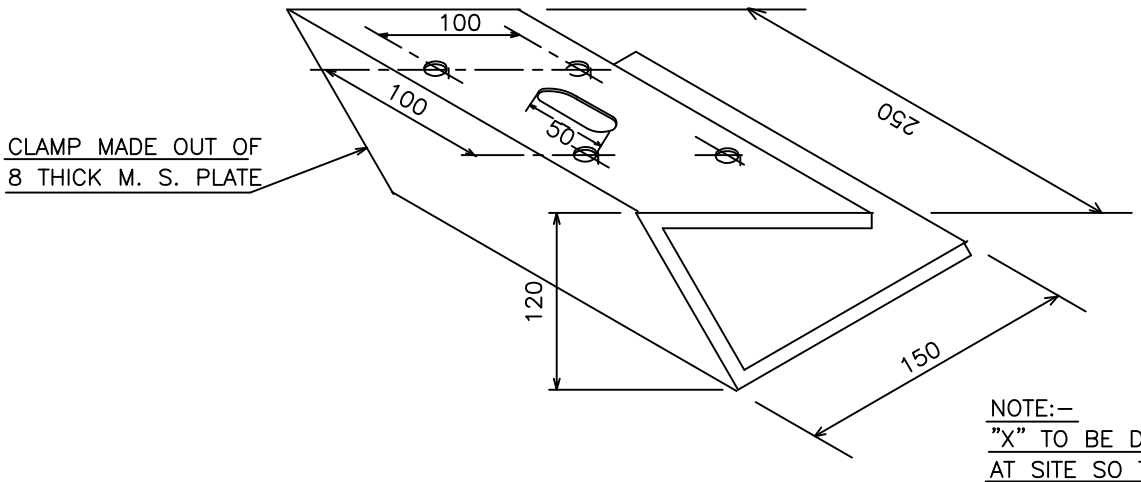

GENERAL VIEW OF CLAMP

NOTE:-
"X" TO BE DECIDED AT SITE SO THAT TOP EDGE WHEN INSTALLED WILL BE STRAIGHT.

DIMENSIONS ARE IN MM.

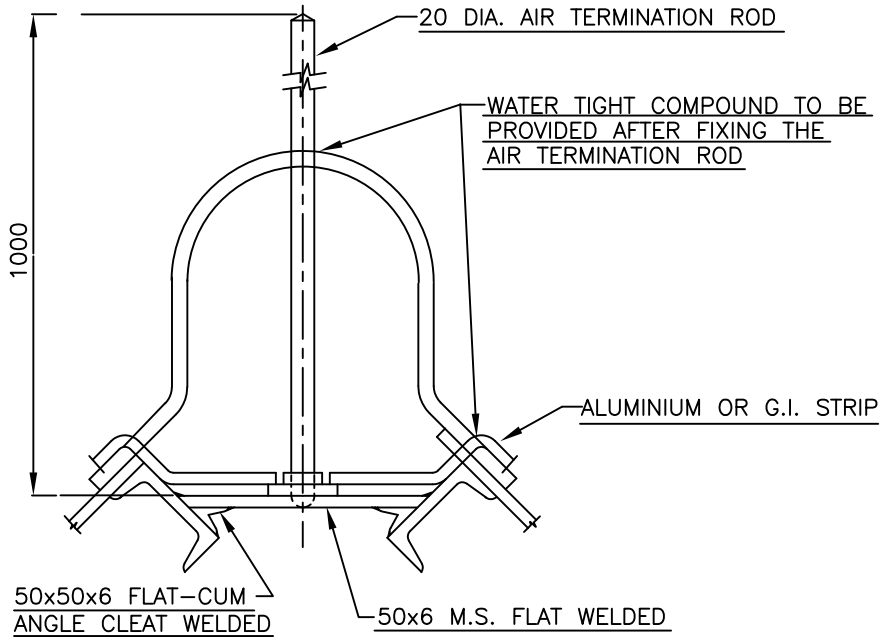

ELEVATION

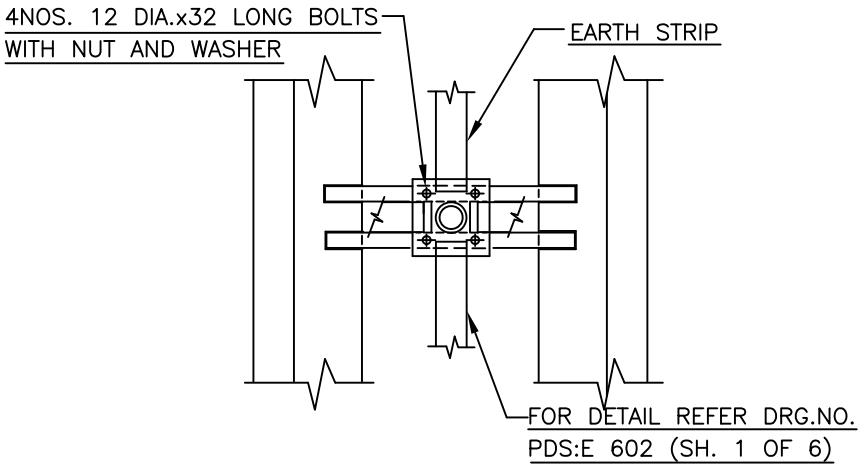

PLAN (RIDGE REMOVED)

FIXING ARRANGEMENT OF AIR TERMINATION ON RIDGE OF A.C. SHEET ROOF

NOTE :

ALL DIMENSIONS ARE IN mm.

पी डी आई एल PDIL	FIXING ARRANGEMENT OF AIR TERMINATION AND ROOF/DOWN CONDUCTOR FOR LIGHTNING PROTECTION SYSTEM	PDS: E 614	0
		DOCUMENT NO.	REV.
		SHEET 5 OF 6	

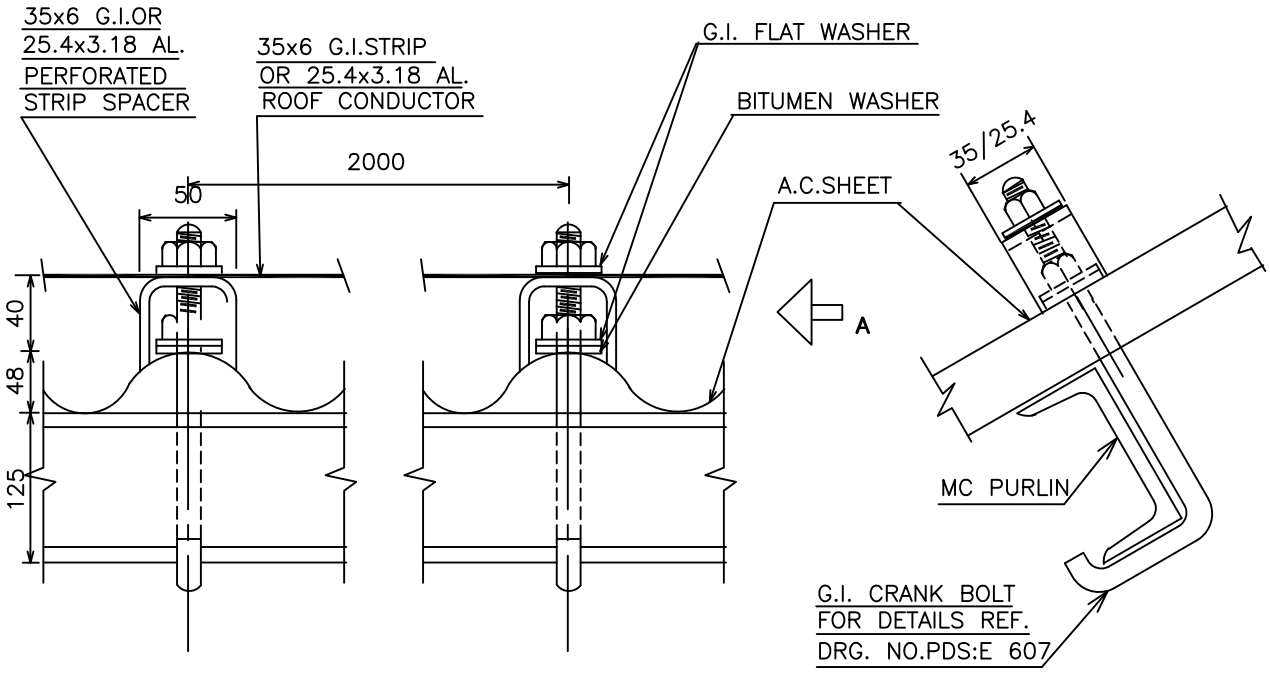

FIXING ARRANGEMENT OF ROOF/DOWN CONDUCTOR ON A.C. SHEET

SIDE VIEW AT–A

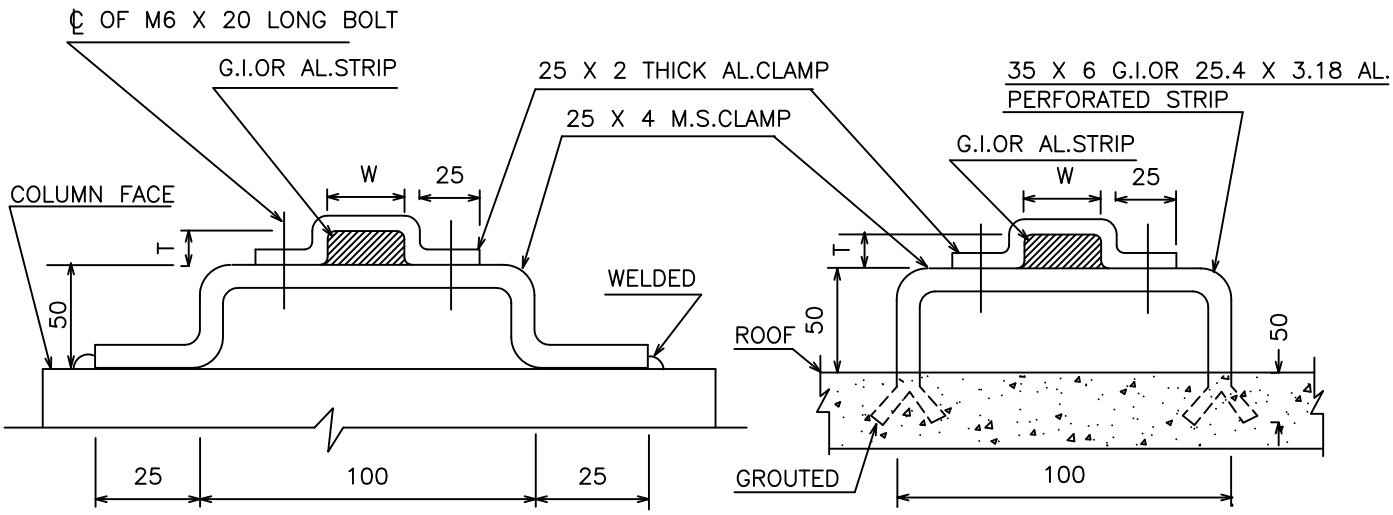

FIXING ARRANGEMENT OF ALUMINIUM OR G.I. DOWN CONDUCTOR ALONG STEEL COLUMN

FIXING ARRANGEMENT OF G.I. OR ALUMINIUM ROOF/DOWN CONDUCTOR ALONG ROOF OR R.C.C.WORK

NOTE:–

1. a) W = WIDTH OF G.I.OR ALUMINIUM EARTHING STRIP
   b) T = THICKNESS OF G.I.OR ALUMINIUM EARTHING STRIP
2. ROOF/DOWN CONDUCTOR TO BE CLAMPED @ 1 METRE INTERVAL TO THE MEMBER OF COLUMN/R.C.C. WORK
3. DIMENSIONS ARE IN MM

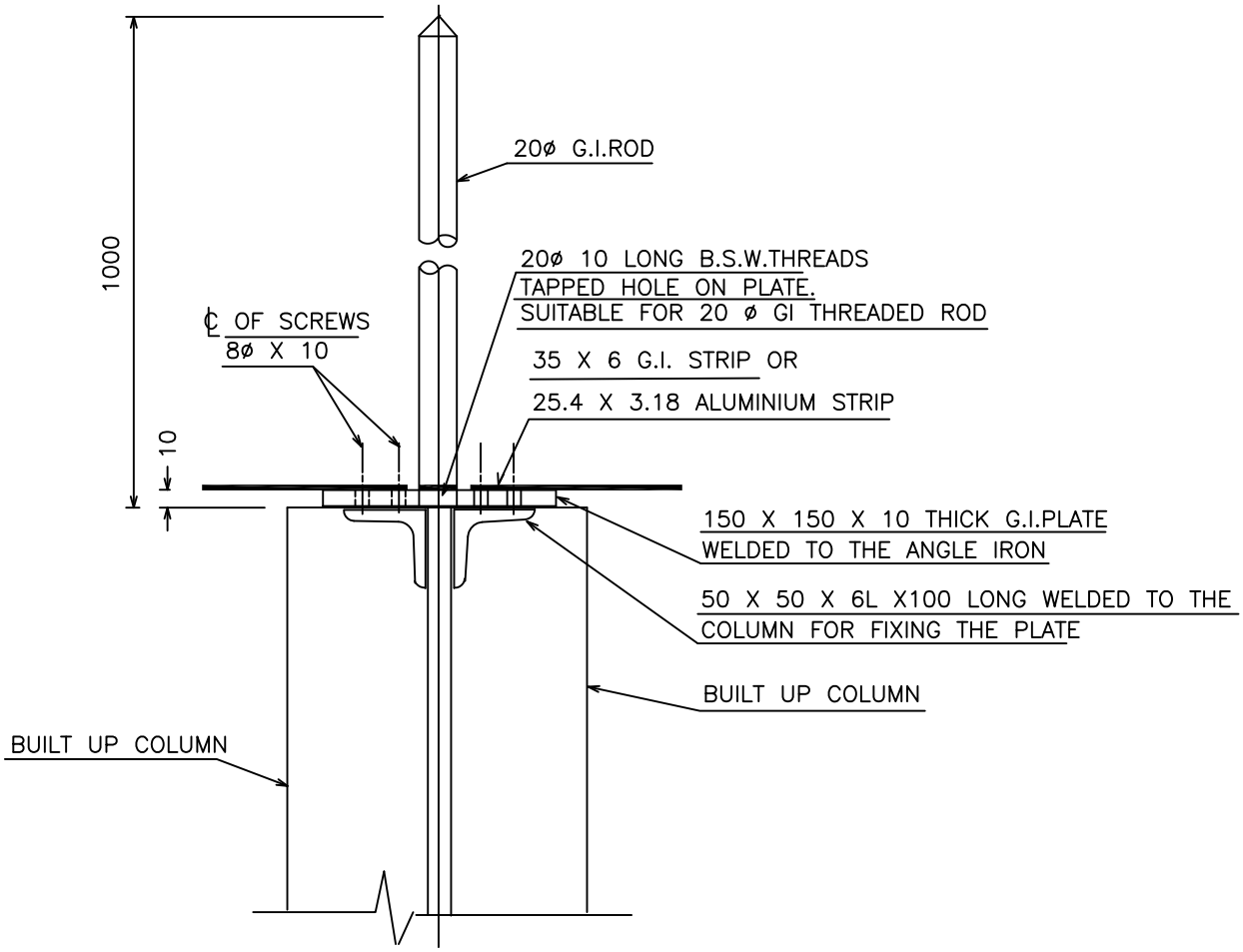

SEC. ELEVATION

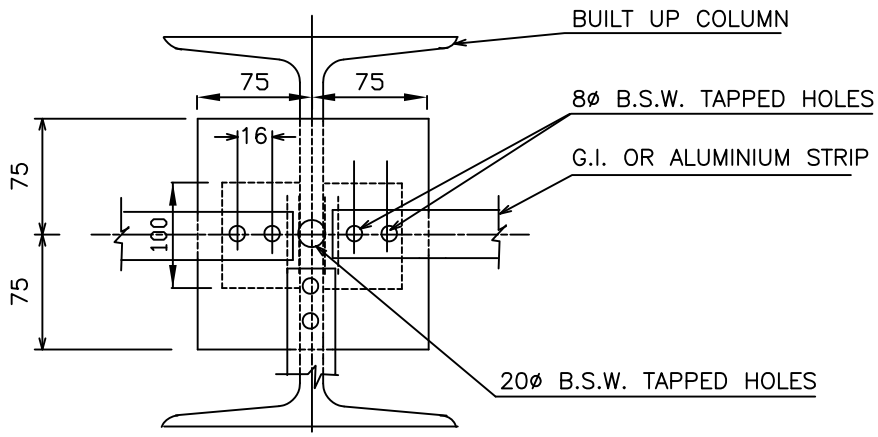

PLAN

FIXING ARRANGEMENT OF AIR TERMINATION ON BUILT UP COLUMN

पी डी आई एल PDIL	G.I. EARTH BUS	PDS: E 615	0
		DOCUMENT NO.	REV.
		SHEET 1 OF 1	

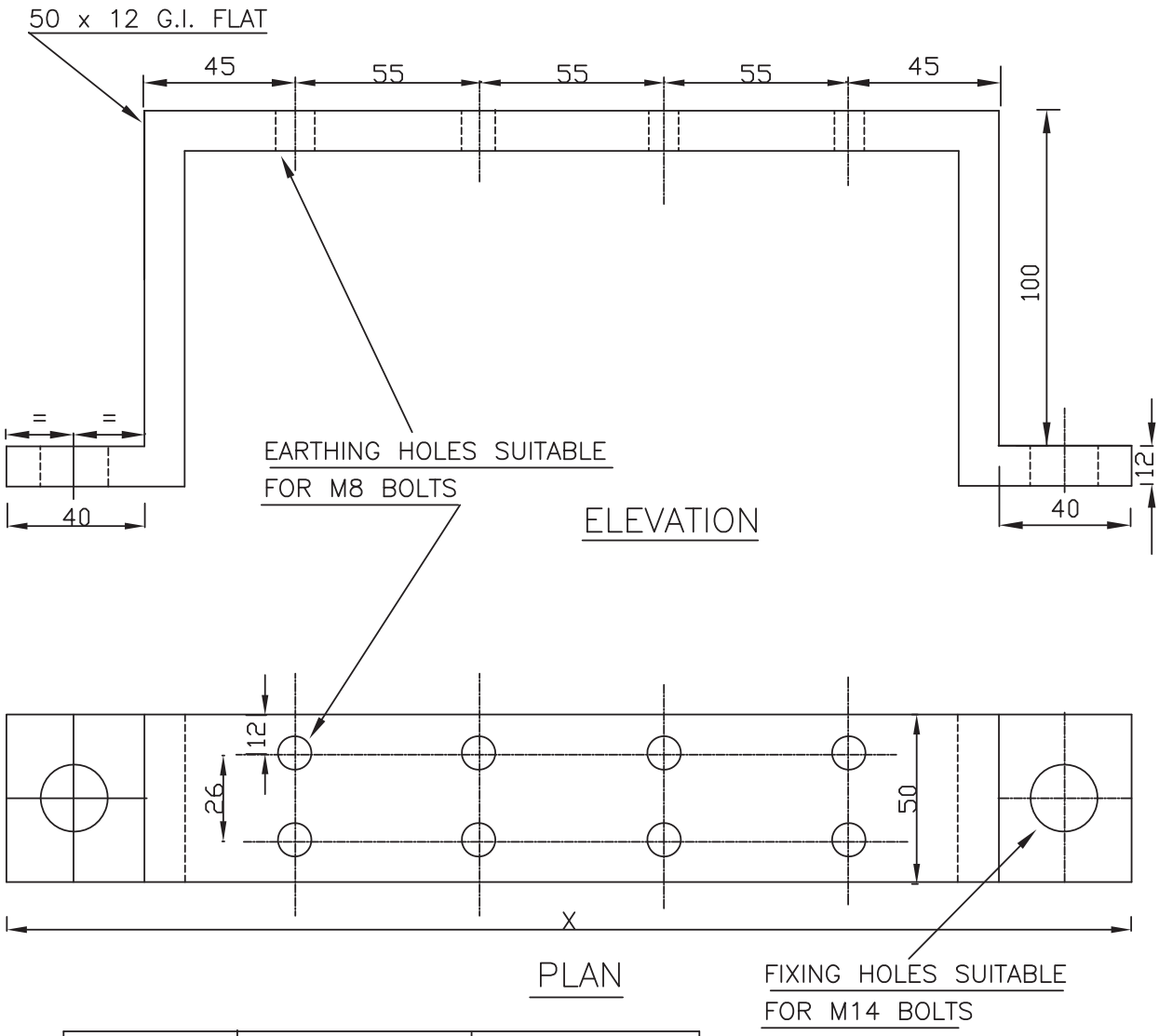

TYPE OF EARTH BUS	NO.OF EARTHING HOLES	OVERALL LENGTH x (mm)
1	8	335
2	10	390

NOTES:–

1. LOCATION OF EARTH BUS TO BE DECIDED AS PER EQUIPMENT POSITION AT SITE.
2. EARTH BUSES SHALL BE LOCATED ON STRUCTURES/COLUMNS WALLS/EQUIPMENT FOUNDATION ETC.
3. MOUNTING HEIGHT OF EARTH BUS SHALL NOT BE LESS THAN 500mm FROM FINISHED FLOOR LEVEL
4. ALL DIMENSIONS ARE IN mm

पी डी आई एल PDIL	TYPICAL ARRANGEMENT FOR NEUTRAL AND EQUIPMENT EARTHING	PDS: E 617	0
		DOCUMENT NO.	REV.
		SHEET 1 OF 1	

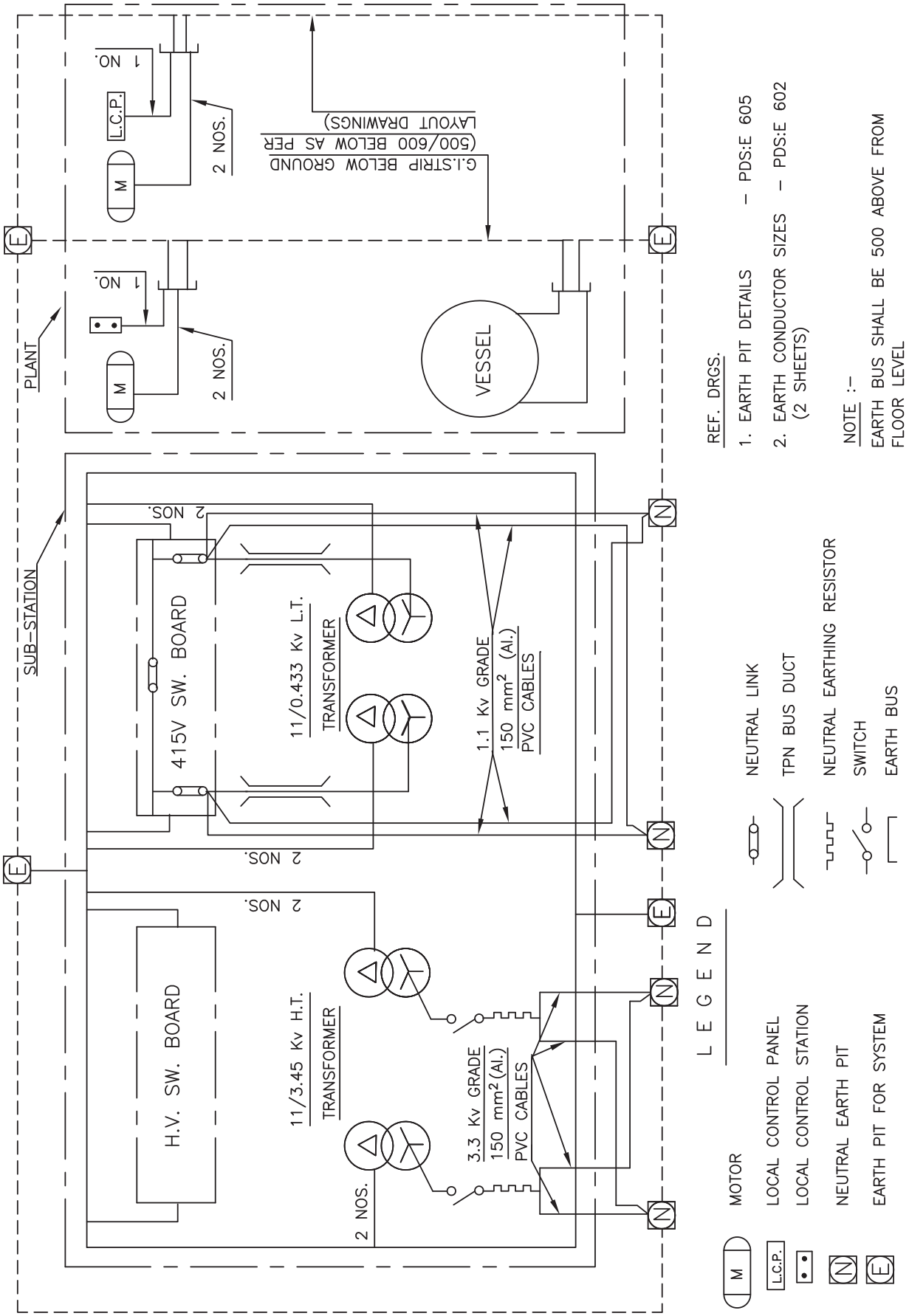

SECTION –5.4

DESIGN SPECIFICATION - INSTRUMENTATION

IMPLEMENTATION OF ZERO LIQUID DISCHARGE (ZLD) UNIT

AT

RAMAGUNDAM FERTILIZERS AND CHEMICALS LIMITED (RFCL),

TELANGANA, INDIA

 All rights reserved

CONTENTS

A. List of Annexure:

B. List General Specification

 All rights reserved

1. INSTRUMENT PHILOSOPHY

SCOPE

The description and requirements contained in this specification are concise by necessity and cannot include all details. However, it is the responsibility of the contractor to execute the job on a turnkey basis in accordance with the specifications and internationally recognized good engineering practices for smooth and successful operation of various units of the plant.

Any activity specifically not listed in this document, does not absolve the contractor of their responsibility to include such activities in their scope of work and supply, which otherwise is necessary, to complete instrumentation work for the **ZLD** plant. Approval of purchase specification does not absolve the contactor from supplying equipment of proven design as per the tender requirement. All such activities shall be carried out by the contractor without any implication.

This section outlines the general requirements and specifications for Instrumentation and Control System for Design, Engineering, Manufacture, Shop test, third party Inspection, Supply, erection and commissioning of **ZLD** plant along with associated facilities. The Instrumentation and Control System shall consist of but not limited to the following:

- **ZLD** plant plant shall be provided with DMR PLC based control system. This control system will accommodate all control/trip and monitoring signal/functions for the Plant.
- Single DMR PLC has been considered for complete system and bidder to ensure segregation of individual plant level signals at AI/AO/DI/DO card level so as to ensure the reliability of the system.
    - The Complete PLC control system i.e. Marshalling panels, Cabinets (System, I/O, PDB, IRP etc.) HMI/Consoles, printers, furniture etc. for the above package shall be housed in the new air conditioned Rack room. 2 nos. OS, 1 no. ES cum OS with SOE, with dual LED monitors will be supplied. 1 no. ES cum OS with SOE will be placed in engineering room & 2 OS shall be in console area of control room.
    - One no. Aux. Console with Ann. window, push buttons, switches for critical trip and alarm shall also be provided.
- **Bidder to note that ES &OS for ZLD plant shall be accommodated in the existing Water block control room. ES & OS shall be provided with furniture .However, existing rack room will need to be extended on the east side (without breaking the wall) for accommodating panels for ZLD with split type air conditioning system. Dimension of Extended portion of Rack room shall be approx 15mx10m.**
- 2 Nos. Corrosion monitoring (copper & silver) with temperature and humidity measurement of M/S PURAFIL make shall be mounted in control room. The location of the monitors must be near the duct and cable entry. The four different

 All rights reserved

AI signals corresponding to above measurements from these two monitors shall be connected to contractor control system with suitable soft alarms.

- All the required protections & interlocks shall be carried out in PLC. All the features such as graphics, alarms, and process parameters display diagnosis for plant equipment shall be displayed in package's operator station installed in the CR.

- For important operating data and indications required for surveillance and monitoring, a provision shall be made to repeat the signals in Client's DCS/ ESD from ZLD package PLC control system , wherever applicable. For this bidder to provide communication redundant port, MODBUS TCP/IP. Bidder to provide necessary interfacing cards in the Rack room. All the hardware & software required for the same shall be in bidder scope.

- Network securities shall be provided by Vendor in control room as per IEC 62443 for protection of the system from both internal and external threat. The requirement includes all USB port blocking (including all monitors / CPU), provision of sufficient firewalls, and antivirus update for one year, patch update; unauthorized logging recording with events etc. must be addressed by Vendor.

- The Instruments in general shall be Electronic Micro processor based type with latest revision of software. The field instrumentation i.e. Flowmeters, Transmitters, Smart Positioner, etc. shall have latest HART protocol latest version as minimum.

- All equipments/instruments/system oriented items (with all its sub-systems) shall be of field proven quality both with respect to design and materials. Prototype instruments or instruments of an experimental nature shall not be offered or supplied. In general, all the supplied items by supplier shall have a well proven performance record of operating satisfactorily in Petrochemical/ Fertilizer/Refinery/ Power Plant for minimum of one year. No instrument requiring special maintenance or operating facilities shall be offered or supplied as far as possible. PTR for field instruments shall be considered min for 2 years.

Bidder to carry out:

- Preparation of engineering and construction documents like functional schematics, I/O list, logic diagrams for interlocks as per ISA 5.2 with functional descriptions, configuration diagram, electrical load list, cable schedule, cable tray/trench layout, instrument air requirement, nameplate schedule, JB schedule, instrument location layout, electrical instrument signal interface, instrument index, layout drawings, loop diagrams, primary and secondary sketches and bill of materials, any other drawing or documents which is required for package erection & commissioning and SAT as well.

- Preparation of all engineering documents for PLC like graphic schemes, instrument loop data base, log formats and any other documents necessary to carry out the system engineering of PLC.

 All rights reserved

- Co-ordination with Control system vendor for system engineering, implementation, software testing, supply and final commissioning and site acceptance tests.

- Co-ordination with all instrumentation vendors for obtaining sufficient information in the form of documents, drawings for engineering and approval from OWNER.

- Preparation of specification for erection materials like cables (Signal, power, control, Optical fiber etc), cable trays, pipe & pipe fittings, air tubing, junction boxes, air distribution pots etc.

- All system cables/fiber optic cables in the field to Rack room/control room shall be routed through separate tray and separate route. Fillings shall be used for joining the HDPE pipe. HDPE pipes shall be ORANGE in colour with BLACK fillings. All system cables/fiber optic cables shall be routed in the middle 150mm portion of the tray. Wherever it is absolutely necessary to route these cables underground, it should be routed in the RCC Trenches only. Separate route should be followed for redundant system cables. Supply of Cable trays and laying of cables through trenches upto Rack Room are in bidder scope. Outside battery limit of ZLD system, cable laying (contractor scope) upto Rack Room/control room shall be routed through available existing Pipe Track and Trench, wherever route facility is not available for cable laying, the same to be decided during detail engineering and it will be in contractor scope.

- No copper or copper alloy shall be used for the parts coming either in contact with process fluid or outside atmosphere.

- Package vendor shall be responsible for local instruments, controls, local panels, installation & wiring, trays & cable laying & termination to junction boxes within the battery limit. Bidder's scope shall also supply, laying, termination of multi-core cable in the junction boxes within battery limit as well as multi-core cable and other inst. /power cables in package PLC located at Rack Room/Control Room.
- On line continuous monitoring analyzers system shall be provided to measure Sodium, Silica and Chlorine to ensure that water is not contaminated.
- All instruments and equipments shall be suitable for use for specified site climatic conditions and industrial environment in which corrosive gases and/or chemicals may be present. As a minimum, all instruments and enclosures in field shall be dust proof and weatherproof to IP-65 or better as per IEC-60529 or equivalent NEMA 4X enclosure rating or better and secure against the ingress of fumes, dampness, insects and vermin. All external surfaces shall be suitably treated to provide protection against corrosive plant atmosphere.

- All Inst. JB's shall be of FRP material with minimum 4 mm thickness with proper support to protect against corrosive environment and cable entry shall be from bottom only.

- The design of electronic instruments shall be in compliance with the electromagnetic compatibility requirements as per IEC 61000-4 "Electromagnetic compatibility for Industrial Process measurement and Control equipment".

 All rights reserved

- Process switches, shall be realized through field transmitters only. If for some packages, process switches are unavoidable same shall be provided, with Client/PMC approval, with sealed micro switch contacts rated for the specified application. Contacts shall be 1 no. DPDT preferably. Otherwise 2 nos. SPDT can be considered. All switch contacts except those used in intrinsically safe circuits shall be silver plated. Contacts used in intrinsically safe circuits shall be suitable for the applications. Switches shall be hermetically sealed type. Switches shall be connected through interposing relays. The material of its construction shall be resistant to acid environment.

- All Field transmitter supports should be properly clamped with SS304 accessories to the pipe for pre-fabricated wherever required and closed couple installation. No air gap shall be kept between support clamp and pipe.

- All Solenoid valves shall be Intrinsically Safe type (24 V DC), with details inside the design basis. Solenoid valve body material shall be SS316. All critical loops must have redundant SOV's.

- All online/offline process analysers and gas detectors shall be supplied complete with proper calibration apparatus / calibration gas cylinders, local indication etc. Auto calibration facility need to be provided for the analysers and gas chromatographs, if applicable. Wherever auto calibration features are not available for any analysers from the approved manufacturers, manual calibration shall be considered.

- Other specification like panel earthing, instrument earthing, MCT material, temp monitoring inside panels, inside Rack room, the scope of vendor shall still be as per contract, UPS monitoring alarms in control system, H2 detector in battery room etc. shall be provided.

- In the event of any conflict between this specification, related standards and codes, any other attachment to this package or process packages, the contractor shall follow the following documents in the order of their priority:

  - ✓ Design Specification-Instrumentation
  - ✓ Statutory requirements and codes & standards
  - ✓ General Standard specification attached

 All rights reserved

2. DOCUMENTATION

Sl.No	Description	With Bid (Y/N)	For Review/ Approval	For Information	Final/ Approved/ As-built
	INSTRUMENTATION				
1	Drawing & document schedule		Y		Y
2	Instrument Index			Y	
3	Instrument sizing calculations (control vales, safety valves & flow elements)			Y	
4	Utility requirements			Y	
5	Level sketches			Y	
6	Material Requisition		Y		Y
7	Purchase Requisition			Y	
8	Vendor Drawings			Y	
9	Functional Schematic			Y	
10	Logic Diagrams as per ISA 75.2			Y	
11	Instrument loop drawings			Y	
12	Rack room layout		Y		Y
13	Layout of equipment inside Rack room		Y		Y
14	Power supply distribution		Y		Y
15	Wiring diagram for panels			Y	
16	Configuration diagram		Y		Y
17	I/O assignment		Y		Y

 All rights reserved

18	PLC graphics, report/log formats & other PLC docs.		Y		Y
19	Instrument duct / tray layout			Y	
20	Instrument cable schedule			Y	
21	Instrument location plans			Y	
22	Instrument installation drawings			Y	
23	Bill of material for installation items			Y	
24	Spare part list for :				
	a. Mandatory Spares			Y	
	b. Start up & commissioning			Y	
25	Inspection & test procedures			Y	
26	Complete catalogues with part list for all vendor supplied instruments, control etc.			Y	
27	Installation, operation & maintenance manuals			Y	
28	As Built Drawings			Y	
29	System Architecture	Y		Y	
30	Instrument Control Philosophy	Y		Y	

3. CONTROL PHILOSOPHY (GENERAL)

3.1 Design and installation of instrumentation shall comply with codes and recommendations listed in item 4.0.

3.2 The instrumentation shall be designed to provide stable and accurate plant control ensure safe plant operation and to facilitate plant maintenance, Control and Monitoring. The operating interface to the process shall be colour dual (stacked monitors) screen 22” LED

 All rights reserved

TFT Colour (Minimum) display units with touch facility, presenting overview, group and point displays as well as process graphics with live data. The operator will manipulate all facilities through dedicated operator's keyboard and using the touch panel.

3.3 I/O units, marshalling cabinets, power distribution cabinets shall be housed in Rack room.

3.4 ES cum OS (dual stacked) with SOE shall be placed on the console of engineering room.

3.5 Package Unit PLCs :

Bidder to provide PLC with redundancy at all levels and with latest model. It shall have provision to communicate with main DCS system through Modbus protocol and connected by Serial cable in redundant mode. Main programmable Logic controller based system for the package including marshalling cabinets, relay cabinets, MCC Interface cabinets, power supply distribution cabinets, instrument isolator, alarm cards, terminals, relays with accessories duly mounted, wired & tested to meet specified requirements.

3.6 DIs/DOs from MCC to control system or from control system to MCC shall be with relays only (no fuse shall be considered). Separate panels for DI/DO and AI/AO. The details will be discussed during detailed engineering.

3.7 Alarm and Annunciation System (LED type only):

Annunciation system is used to indicate and sound alarm for any process abnormality, trip/status change of Electric drive. Annunciation system shall be of modular design & programmable type. Electrical circuit is designed to read the change of state of discrete signal and generate the output to illuminate the window and give the alarm. The alarm can be silenced by acknowledge switch. Window light can be reset after acknowledgement and, when the state of signal returns to the prior alarm state. Annunciation system can be configured for any of sequences of ISA standard. There shall be a provision in circuit design to change the state of signal required to generate alarm (from Open to Close or vice versa) simply by changing the jumper position on circuit board. Lamps in window shall be replaceable from the front.

Hooter in general, shall be solid state type with audibility of the order of 100 dB at the distance of 3 meters. An interruption of power supply up to 20 msec shall not affect the functioning of unit.

The minimum instrument accuracy shall be as defined in Annexure-1.

3.8 SIL certification rating for all the instruments shall be minimum as per following list :-

- All Smart Positioners - SIL 2

 All rights reserved

- All Transmitters - SIL 2
- All Solenoids - SIL 3
- All Gas Detectors - SIL 2
- All switches - SIL-3 or maximum SIL rating available
- All Relays - SIL 3
- All Barriers - SIL 3

3.9 Universal HART Protocol with Latest Revision shall be used in all cases.

3.10 Card mounted Relays are acceptable but cards must have redundant power facility, with its power healthiness indication in diagnostic graphics.

3.11 Cable entry to Rack room, analyser shelter, substations shall be through MCT blocks with SS316 MOC only.

3.12 Entry into the Marshalling Panels in the Rack room shall be through bottom mounted 316SS MCT blocks.

3.13 General Earthing & Instrument Earthing shall be provided separately (Panel and power earthing, PLC system earth and Instrument signal earth is minimum envisaged).

3.14 All wetted part materials for all instruments (sensing elements) for corrosion prone area shall be min SS316L, Ni alloy, Tantalum, Titanium etc based on the process fluid type. Vendor shall submit the technical datasheets for Owner/Consultant review and acceptance during detail Engineering.

3.15 The Instrument item like control valve, pressure relief valve, orifice flanges, level instrument, thermowell etc., coming on pipe and vessel under IBR services shall be certified by IBR or IBR authorised representative, even for SS metallurgy.

3.16 Turbine Flowmeter shall not be used.

3.17 All Contacts shall be 2 SPDT or 1DPDT.

3.18 No Switches (Pressure / Level/ Flow / Temp.) shall be used.

3.19 All Field transmitters for pressure, d/p, level and flow shall be microprocessor based (dual compartment) SMART transmitters with “UNIVERSAL HART” protocol with latest revision. The transmitter selection shall be such that the operating maximum upper limit shall be around 70% of the total measurement range of the transmitter.

3.20 All Field transmitters for pressure, d/p, level and flow shall be provided with 10 years stability (0.1%).

 All rights reserved

3.21 Package vendor shall provide a common laptop (latest configuration 8th Generation Intel i7 8550U processor, Windows 10 Pro OS, 8GB RAM, 256 GB SSD+, 1TB HDD, Full HD display (15"),3 yr warranty with anti-virus and other engineering software) for configuration of dedicated vendor standard PLC

3.22 All equipment/materials supply shall include spares required for 2 years operation and separate consumable for commissioning.

3.23 Electrical Drive IO List :-

ON- feedback (DI), OFF-feedback (DI),, TRIP-Feedback(DI),, Ready to Start(DI),, L/R Selection(DI),, ON-command(DO), OFF-command(DO)

3.24 Motor / electrical equipment control philosophy

a. Field

- Ready to START (Lamp)
- START
- STOP
- L/R Switch

b. For Package PLC

- STOP Command
- Discrepancy Alarm
- Running Indication
- Motor Fault Alarm
- Current Indication (All motor > 3.7 KW)
- L/R Switch Indication
- Ready to START F/B

c. For start / stop of all electrical equipments, local/remote selector switch shall be located in field, A/M (Auto/ Manual) and stop push buttons on consoles in CR.

d. Local stop push button on LCS (local control station) shall be always effective.

e. In remote mode, motor can be stopped from control system.

f. In LOCAL mode, both START and STOP shall be possible only from LOCAL. Only in REMOTE, stopping is possible from control system.

g. Auto / manual selection shall be in PLC/Main Control System.

 All rights reserved

3.25 For all motors current indication shall be provided in control system for rating more than 3.7KW.Control system should have separate dialogue box or page showing process interlock condition for 3.7KW and above rating motors.

3.26 Auto start for pumps must be designed using 1oo2 philosophy.

3.27 All Instruments including volume bottle must be painted with Corrosive resistant epoxy paint.

3.28 Local indicators, start /stop switches, emergency stop switches shall also be provided near package units/rotating machines where local start up of the equipment is advisable.

3.29 For instrumentation electrical interface, input and output contacts shall be in separate multicables (should be signal cables).

3.30 Trip solenoids shall be dual redundant, and configured and hooked up properly in such a way that failure of one solenoid doesn't initiate a false trip. Trip solenoids shall be normally in energised condition and shall be de-energised to initiate trip.

3.31 All trip interlocks must be designed on 2oo3 philosophy.

3.32 Emergency stop and critical stops must have transparent protective cover.

3.33 PB's , Annunciator , EPB must be available on console placed in CR.

3.34 Air fail to open, Close or Hold of any control valve shall be as per Licensors document, to take care of process, plant and human safety. For Piston actuators necessary air volume chambers and lock up relay shall be provided to achieve the fail-safe condition.

3.35 All Analysers shall be Ex.proof irrespective of area of installation.

3.36 All control valves / On–Off Valves / MOVs shall be flanged type.

3.37 Control valve / on-off valve, pneumatic valve shall be designed for minimum 4 Kg/cm2 air pressure.

3.38 Actuator design shall be of 1.5 times of shut off pressure or design pressure, whichever is higher.

3.39 Valve body MOC in steam service shall be of WCC or better irrespective of pipe class.

3.40 Air distribution pots shall be of stainless steel (SS304). Inst. Impulse pipes / tube for process parameters shall be in accordance with piping specifications.

 All rights reserved

3.41 Hart Compatible gas-detectors to be provided. Electrochemical type gas detectors shall not be considered. Bidder to submit suitable gas detectors as per OEM recommendation/ as per ITB as specified elsewhere. Bidder to submit gas detectors quantity calculation along with layout. Bidder to provided hooters (electric type) & beacon (rotating type with light flash).

3.42 All line mounted instruments like in-line SOVs, Magnetic flow meter, Rotameter, Mass flow meters etc shall be provided with block & bypass arrangement, with their indications in system as per requirement, which will be discussed in detailed engineering.

3.43 Separate Sample handling system shall be used for each analyzer. Multi Channel with stream selector can be used, provided the total system including sample handling system shall be imported. Necessary sequence shall be inbuilt in the analyzer for draining the condensate.

3.44 For double acting valve, air accumulator (with MOC as SS304) shall be used for achieving fail safe operation.

3.45 FRP Canopies (UV stabilized 3 mm thick), 2” Pipe mountable, are required for Transmitter, JBs, LCPs, Control Valve positioner, Temp Elements, Proximity level switch, remote mounted electronics, mass flowmeter, ultrasonic flowmeter etc. FRP Canopy shall be Prefabricated type. Canopy for transmitters shall cover top and 3 sides. SS canopy instead of FRP, if offered by package vendor, shall also be acceptable. No separate canopy shall be required for instruments located under shed like compressor shed etc.

3.46 System / Marshalling/ Packages cabinet size shall be 2100 (H) X 1200 / 800 (W) X 800 (D) Rittal make.

3.47 Separate Tapping shall be used for each instrument coming for trip, control & monitoring, local display. Not more than 3 set of taps are allowed.

3.48 Smart positioner shall be considered for all Control Valves. For high temperature services (Above 200 Deg C) remote mounting shall be used for the smart positioner.

3.49 Positioner shall be of valve OEM or as per approved vendor list.

3.50 For all Local panels rain cover to be provided. The gasket of local panels must be acid resistant preferably Silicone/EPDM or better which will be discussed during detailed engineering.

3.51 For Analysers separate feeders to be directly taken from UPS. No sub-branching is allowed at any place.

 All rights reserved

3.52 No Switches to be used. If in pump seal plan, if level measurement is requirement, GWR to be used.

3.53 Fibre optic cables shall be armoured, multicore type. All fibre optics cable must be laid through HDPE conduit. The make of fibre optic cables shall be Belden / Leoni.

3.54 All cables inside package battery limit shall be supplied and laid by Package vendor through instrument cable trays supplied by Package vendor. All cables inside skids/modules shall be supplied in pre-wired & pre-tested condition.

3.55 All Instrument Hookups shall be approved by owner/PMC.

3.56 All fittings shall be SS316 and in inch only.

3.57 All tubing shall be SS316L .Vendor shall submit the technical data sheet of the tubing for Owner/Consultant review and acceptance during detail Engineering..

3.58 The manifolds (3 valve/5-valve/2 valve) material shall be SS316L.

3.59 All the soft parts of Local panels/JB/SOVs etc shall be of acid resistance, preferably silicone, EPDM or better which will be discussed during detailed engineering.

3.60 Level measurement in the acids tanks shall be of Ultrasonic type with Instrument and sensor material suitable for acid application.

3.61 For all Diaphragm Seal Type DP Transmitters/Gauges on Vessels, min size and rating shall be 3” 300# RF. Isolation valve shall be BALL type.

3.62 Level measurement in the acids tanks shall be of ultrasonic type.

4. INSTRUMENTATION CODE AND PRACTICES

IEC 13	Diagrams, Charts and Tables, Preparation of Logic Diagrams
IEC 534	Industrial - Process Control Valves
IEC 584	Thermocouples
IEC 605	Equipment Reliability Testing elements
IEC 611-12	Part 12 Graphical Symbols for Diagrams. Binary Logic
IEC 654	Measurement and Control equipment
IEC 751	Industrial Platinum Resistance Thermometer Sensor
IEC 801	Electromagnetic Compatibility for Industrial Process measurement and Control Eqpt.

 All rights reserved

IEC 848	Preparation of Function Charts for Control Systems
IEC 902	Industrial Measurement and Control Terms and Definitions
ISA S-5 .1	Instrumentation Symbols and Identification
ISA S-5.2	Binary Logic Diagrams for Process Operation
ISA S-5 3	Graphic Symbols for Distributed Control/Shared Display Instrumentation, Logic and Computer Symbols
ISA-S20	Instrumentation specification formats
ANSI/ISA S 5.1	Process Instrumentation Terminology
ANSI/ ISA S71.04	Environmental conditions
ANSI/ ISA S75.01	Control Valve Equations
ANSI/ ISA S75.02	Control Valve Procedure Capacity Test
ANSI/ ISA S75.03	Face-to-Face Dimensions for Flanged Globe Style Control Valve Bodies
ANSI/	Quality Control Standard for Control Valve Seat
FCI 70.02	Leakage
BS 6020	Instruments for the Detection of Combustible Gases
DIN 43760	Measurement Standard for RTD.
DIN 19243	Measurement and Control Electrical Sensors, Electrical Position Sensors and Signal Converters used for Intrinsically safe two-wire DC System.
EN-50-014/020	Electrical Apparatus for Potentially Explosive Atmospheres
EN 54 Part I	Components of Automatic Fire Detection System Introduction.
EN 54 Part 5	Heat sensitive Detectors - Point Detectors containing a Static Element.
ISO 3511.1	Process Measurement Control Functions and Instrumentation Representation Part I: Basic requirements.
ISO 3511.2	Process Measurement Control Functions and Instrumentation Representation Part 2: Extension of Basic Requirements.
ISO 3511.4	Process Measurement Control Functions and Instrumentation Representation Part 4: BasicSymbol for Process Computer, Interface and shared Display/Control Systems.
ISO 4200	Plain End Steel Tubes, Welded and Seamless - General Table of Dimensions and Masses per Unit Length.

 All rights reserved

ISO 5167	Measurement of Fluid by Means of Orifice Plates, Nozzles and Venturi Tubes Inserted in Circular cross-section Conduits Running Full.
API RP 520	Sizing, selection and Installation of Pressure relieving devices in Refineries
API RP 521	Guide for Pressure Relieving and Depressuring System
API RP 2000	Venting Atmospheric and low-pressure storage tanks
API-RP-550	Manual on Installation of refinery Instruments Part I and Control System
ANSI - B 16.104	Control Valve seat leakage
ISA-S 75.01	Control Valve sizing
ISA S 18.1	Specifications and guides for the use of general Annunciators.
IEC 529	Environmental Protection of equipment
ANSI B 2.1	Pipe threads
ANSI B 16.5	Steel pipe flanges, flanged valves and fittings
IEC 79.11/	Intrinsic safety code and practice
IEC-79.14	International Boiler Regulation
IS 2148	Flameproof enclosure of electrical apparatus
BS EN 62676 series	Video surveillance systems for use in security applications
BS EN 62676-1-1	Video System Requirements
BS EN 62676-1-2	Video Transmission – General Video Transmission – Requirements
BS EN 62676-2-1	Video Transmission Protocols – General Requirements
BS EN 62676-2-2	Video Transmission Protocols – IP Interoperability implementation based on HTTP and REST services
BS EN 62676-2-3	Video Transmission Protocols – IP Interoperability implementation based on web services
BS EN 62676-3	Analog and Digital Video Interfaces
BS EN 62676-4	Application guidelines

5. HAZARDOUS AREA CLASSIFICATION & ELECTRICAL EXECUTION

5.1. Irrespective of area classification, the execution of instrumentation shall be as per area Zone 2, group IIC, T6, EExib and Protection.

Electrical / Electronic instruments IP 67

 All rights reserved

Sensors; RTD, T/C, etc.	IP 65
Local Gauges; PG, etc.	IP 65
Pneumatic instruments	IP 54
Solenoid valves	IP 67
Local Panel / Skid Mounted Panels	IP 65

EMC compatibility and electrical safety as per latest IEC standard.

5.2. Electrical instrument equipment shall be designed for and supplied as intrinsic safe certified.

Analysers, solenoid valves and other equipment that cannot be classified intrinsic safe shall be ex-proof in accordance with the above mentioned electrical specification.

In general, Intrinsic philosophy shall be followed for all the instruments. Where ever intrinsically safe philosophy is not available, Exproof/Flame proof philosophy shall be followed.

Certification for installation in hazardous areas in accordance with IEC 60079 series is shown below:

Transmitters, positioners, Limit Switches, etc.: EEx ib IIC T6

Field Switches: EEx de IIC T6

Analysers and Panels: Ex p IIC T6

Solenoid Valves: EEx ib IIC T6 (Ex md not allowed)

Junction Boxes and Cable Glands: Exe/Exd

6. ELECTRICAL SUPPLY

The electrical supply will be as follows:

S.No.	Description	110 V AC 50Hz UPS	110 V DC	24V DC	110 V AC Non UPS	240V AC 50Hz (Non UPS)	415 V AC-3 phase	Remarks
1	PLC	YES						
2	Package Units	YES				YES		Non UPS for Lighting
3	Alarm Annunciator	YES						
5	Solenoid Valves			YES				
6	Smart Positioners, I/P, Transmitters			YE S				
7	I/P Interrogation Voltage			YE S				

 All rights reserved

8	Gas Detectors			YE S				
9	Analyzers and Analyzer System	YES						
11	Level Gauge Illumination					YES		
12	Cabinets Fan					YES		
13	Cabinets Lighting					YES		
14	Rack Room/Control Room					YES		
15	Local Panel	YES		YES		YES		Non UPS for Lighting
16	CCTV	YES						
17	Analyzer Cabinet Air Conditioning	YES						
18	Analyzer Shelter HVAC						YES	
19	Normal AC for Field Operator Room					YES		

Where 24V DC is needed, it will be generated by local rectifier units (bulk power supply with MOSFET O-ring), which are part of the instrumentation supply. The power supply to these units shall be taken from the UPS.

Where 24V DC are used for Safety Circuits, the rectifier units shall be duplicated and with high reliability and form a part of PLC vendor. The bulk power supply shall be with MOSFET O-ring.

There shall be minimum 4 (two no. Of each type; total 8 nos.) separate earth pits for signal (IS) , Non IS, Panel and chassis (system) grounding for PLC Earthing system at Rack Room with different cable colour codes. All earth shall be less than 1 Ohm or OEM specific, if better. Redundant earthing shall be considered for signal shield earthing and panel body earthing respectively. The size of Earthing Cable shall be 50 sq.mm minimum and should be routed in proper HDPE conduit, outside the Rack room building. All above instrument earth pits shall be separate from Electrical earth pits and must have separate colour identification from electrical earths. Minimum 2 nos. Of earth pits of each type (total 8 nos) shall be constructed by the bidder.

Supply of earth electrodes, grounding cables (separate for signal grounding and instrument grounding) and other related accessories required for barrier earth, system earth and installation shall also be in the scope of work Contractor. Copper conductor

 All rights reserved

shall be of 1Cx10 Sq mm as minimum. For surge protection devices separate earthing shall be used.

Grounding requirement for other system to be taken care by Contractor

Earthing of all new equipments / instruments located at Rack room for New PLANT of new earth pit at Rack room with all cables, electrode, pit shall be provided by contractor.

UPS supplies shall not be used for utilities supplies cooling fans, panel/cabinet lighting etc. A separate non-UPS supply shall be used for the same.

A summary of all critical UPS alarms, 24V DC supply, Panel supplies, diode o rings healthiness shall necessarily provided in control system system and hardwired annunciation in control room or any manned location

Only copper cables & tin-plated copper lugs shall be considered for instrumentation power distribution system.

One no of redundant feeder for UPS supply be provided by the client. UPS shall be in bidders scope. Further distribution to the bidder control system in the CR, Field operator room and in the field shall be in the bidder scope. Therefore necessary PDB shall be provided by the bidder to distribute power supply.

Protection coordination with respect to fuse/MCB ratings from the supply source ACDB/DCDB to downstream distribution panels shall be thoroughly studied by the system designers/OEM and documented as a part of the system documentation and be implemented accordingly.

MCB's must have DI contact's which must be wired to PLC and available in diagnostic graphics.

7. FIELD INSTRUMENTS

7.1. Analyser

All liquid analysers (pH, conductivity, pH in Effluent) shall be of intrinsic safe design suitable for execution class specified for the area. Liquid Analyser, sampling conditioning unit and other accessories shall be mounted on a rack suitable for field mounting. pH, conductivity shall be installed preferably in a bypass line to facilitate maintenance of the analyser.

All Analysers shall be micro-processor based in general and shall be capable of providing detail diagnostic alarms, messages to help maintenance personnel. Analysers shall have manual/auto calibration facility.

 All rights reserved

Self diagnostic routines and calibration functions shall be provided as standard. The Bidder shall supply details of self diagnostic routines and calibration functions including calibration intervals. The Analysers shall use tried and field tested analysis technology.

Analysers shall generally be single stream. Multi stream Analyser applications shall be supplied where process requirements specify.

7.1.1 pH ANALYSER

Design Data and Construction

7.1.1.1 The bidder shall provide a complete pH Analyser with electrodes mounting accessories, sample handling system & indicating analyser transmitter.

7.1.1.2 The pH of the solution shall be detected by a sensor assembly. This sensor shall provide an output signal proportional to the concentration of free hydrogen ions. Unless otherwise specified, measuring system shall be provided with automatic temperature compensation. Temperature sensing shall be through temp sensor 3-wire platinum RTD.

7.1.1.3 In general, the selection of Analyser shall be based on the type of installation e.g. Flow thro', insertion or submersion and the area classification.

7.1.1.4 When installed in electrically hazardous areas, the installation could be either intrinsically safe. Specific preference, if not indicated, Intrinsic Safety shall be considered. In either case, certification from statutory bodies such as ATEX, PTB or equivalent shall be provided. Evidence of such approval shall be affixed to each and a copy of the certification letter shall be provided.

7.1.1.5 DELETED

Sensor

7.1.1.6 Sensor shall consist of measuring electrode, reference electrode & 3-wire platinum RTD temp sensor for automatic temperature compensation.

Electrodes

7.1.1.7 The type electrode and material of construction shall be decided based on the process conditions furnished in data sheet. Bidder in his offer shall clearly demonstrate suitability of selection of sensor.

7.1.1.8 Where required, bidder shall provide appropriate cleaning device for the electrodes.

7.1.1.9 For sanitary applications, provisions for sterilization shall be provided.

 All rights reserved

Transmitter

7.1.1.10 Transmitter electronics shall be microprocessor based, two-wire transmitter with 4~20mA DC linear output proportional to the pH with HART protocol. Transmitter electronics shall be interchangeable with all other pH analysers.

7.1.1.11 Transmitter shall be provided with local LCD display and the range shall be user configurable.

7.1.1.12 Transmitter housing shall be weatherproof to IP65 and shall have two number ½" NPT(F) electrical entries for termination of cables.

7.1.1.13 Transmitter shall be suitable for 2" pipe mounting. Bidder shall provide mounting bracket & other accessories of (SS304) .

7.1.1.14 In the event of transmitters being specified as 'SMART', following requirements shall be met.

- All transmitters shall be high performance type microprocessor based 'SMART' type with 'HART' protocol with latest version.
- Configuration shall be possible by locally and/or with handheld communicator. Bidder shall optionally quote for hand held communicator.
- Multiple level of security shall be provided including elimination of zero and span adjustments, software lockout of local adjustment and complete write protect capabilities.

ACCESSORIES

7.1.1.15 Sensor Cable and Junction Box

- Bidder shall supply special cable for connecting sensor to the transmitter along with SS316 double compression cable glands at both ends.
- Cable length shall be as specified. Where specified length is not available, bidder shall supply junction box for connecting sensor cable and the extension cable.
- Junction box shall be of FRP material . Bidder shall also supply associated cable glands. Flameproof certification shall be provided if hazardous area is specified in the specification. Spare entries of junction box shall be plugged (Ex proof SS316).

 All rights reserved

7.1.1.16 **DELETED**

7.1.1.17 Low Conductivity Water

The extremely low ionic strength of boiler feed or de-ionized water, demands the use of a flowing sample, and the careful exclusion of air to prevent any ingress of carbon dioxide. The glass electrode will tend to read high if the sample is not flowing past it. Some response lag may occur because the low ionic concentration provides a very poor diffusion gradient for hydrogen ion activity changes while a very high flow-rate could evolve streaming potentials. Bidder shall consider & suggest the electrode & sampling system for such application.

7.1.1.18 **Installation**

pH analyser shall be installed in field. Bidder shall provide analyser with Hazardous area suitability, sample take off technique and inline installation drawing, Local LCD display on analyser front.

7.1.1.19 The sample conditioning system shall be provided as necessary to reduce temperature and pressure to conditions suitable to the pH electrode. This shall consist of sample cooler, filter, pressure regulator, relief valve, pressure gauge, thermometer, etc.

7.1.1.20 Flushing: pH analyser with arrangement of flushing sequence with suitable time & SOVs for slurry application shall be provided by bidders as per the requirement in the datasheet.

7.1.2 CONDUCTIVITY ANALYSER

7.1.2.1 The analyser shall perform the unattended analysis of the conductivity level of the stream.

7.1.2.2 The bidder shall-provide a complete conductivity analyser system. The system shall consist of the following:

- Conductivity cell with accessories.
- Sample handling system.
- Indicating analyser transmitter,

7.1.2.3 Sample Conditioning System (If Required)

7.1.2.4 The sample conditioning system shall be provided as necessary to reduce temperature and pressure to conditions suitable to the conductivity cell. This shall consist of sample cooler, filter, pressure regulator, relief valve, pressure gauge, thermometer, etc.

 All rights reserved

7.1.2.5 Sample conditioning system components with the exception of the conductivity cell shall be constructed of 316 SS.

7.1.2.6 The conductivity cell and the sample conditioning system shall be mounted on a steel plate suitable for surface mounting.

7.1.2.7 **Conductivity Cell**

- Conductivity cells are to be suitable for the individual process streams as listed on the data sheets.
- Line mounted insertion type conductivity cell, when specified on the Instrument Data Sheets shall be retractable with suitable packing gland and isolation valve.
- Conductivity cells shall be provided with automatic temperature compensation.
- Electrodes shall be platinized, gold plated nickel or 316 SS with stainless steel fittings.
- Conductivity cells shall be certified for installation in the electrical area classification as specified on the data sheet.

Indicating Analyser Transmitter

7.1.2.8 Each analyser shall be suitable for pipe or wall mounting and shall be the indicating type.

7.1.2.9 Calibration check switches shall be provided on each analyser.

7.1.2.10 Automatic temperature compensation shall be provided for each analyser.

7.1.2.11 The analyser shall have a weatherproof (IP 65 as minimum) housing and shall be certified for installation in the electrical area classification specified on the Instrument Data Sheets.

7.1.2.12 Transmitter shall be the two wire type and provide an isolated 4-20 mA linear output wired in control system and local indication.

7.1.2.13 Transmitter shall be suitable for field installation.

7.1.2.14. Transmitter shall be suitable to Hazardous area classification.

7.1.3 SILICA Analyzer

7.1.3.1 Silica Analyzer shall be HACH make. It shall be an on-line multi channel analyzer, designed to provide continuous monitoring or programmed sampling of silica concentration, utilizing a standard colorimetric analysis principle. Silica Analyzer shall be of 5 nos. of

 All rights reserved

Channels/streams and range shall be 0-0.02ppm (0-20ppb) (freely configurable) with 0.5ppb resolution for all range. Response time shall be <15 Min per sample. The Reagent shall be supplied for at least Six (06) months operation backup post commissioning.

7.1.3.2 The bidder shall-provide a complete Silica analyser system. The system shall consist of the following:

- Silica cell with accessories.
- Sample handling system.
- Indicating analyser transmitter,

The analyser complete with sample conditioning system shall be housed in a cabinet.

7.1.3.3 Analyser shall be provided with serial output and shall be integrated with Package vendor's control system.

7.1.3.4 The control unit shall be microprocessor based smart type with temperature controller, auto calibration and zeroing facility, self diagnostic facility, with local indication and alarm for operating parameters, Automatic shutoff on sample failure and automatic start up on revival of sample etc.

7.1.3.5 The control unit shall be weather proof to IP-65 ,intrinsically safe and shall be suitable for hazardous area mounting.

7.1.3.6 Sample Inlet/Outlet Connections shall be ¼ inch OD .Tubing material shall be Polypropylene or better.

7.1.3.7 Enclosure shall be constructed of SS.

7.1.3.8 Analyzer shall provide 2 isolated 4/20 mA outputs and 4 programmable alarm relays. Relays shall be rated for 5 A @ 240 V AC

7.1.3.9 Analyzer shall be capable of auto ranging and auto calibration.

7.1.3.10 Display shall have digital graphics LCD with backlight.

7.1.3.11 Any other reagents/chemicals/specialized tools and tackles required for successful installation & commissioning and on site calibration (if required) of the system will be in vendor scope. However Reagent shall be supplied for at least Six (06) months operation backup post commissioning

7.1.4 Sodium Analyzer

 All rights reserved

7.1.4.1 Sodium Analyzer shall be multichannel on-line analyzer, providing continuous sodium measurement using ion selective electrode or vendor to specify. No of Channels/streams shall be 3 nos. and range shall be 0-5ppm (Range shall be freely configurable)

7.,1.4.2 The control unit shall be microprocessor based smart type with temperature controller, auto/manual calibration and zeroing facility, self diagnostic facility, with local indication and alarm for operating parameters, Automatic shutoff on sample failure and automatic start up on revival of sample etc.

7.1.4.3 The control unit shall be weatherproof to IP-65, intrinsically safe and shall be suitable for hazardous area mounting.

7.1.4.4 Analyser shall be provided with serial output and shall be integrated with Package vendor's control system.

7.1.4.5 There shall be two 4-20 mA outputs, one dedicated to sodium and other one to temperature.

7.1.4.6 Temperature compensation shall be provided

7.1.4.7 Sample conditioning system details shall be provided by vendor.

7.1.4.8 The vendor shall maintain sufficient stock for reagents/chemicals.

7.1.4.9 Any other reagents/chemicals/specialized tools and tackles required for successful installation & commissioning and on site calibration (if required) of the system will be in vendor scope.

7.1.4.10 Display shall be backlit LCD with temperature, concentration, mV, error codes etc.

7.1.5 Chlorine Analyzer

7.1.5.1 Chlorine analyzer shall be an on-line analyzer, designed to provide continuous monitoring of chlorine, chlorine dioxide based on amperometric / colorometric method. The system shall monitor and control free/ residual chlorine levels accurately. Range shall be 0-5ppm. (Range shall be freely configurable)

7.1.5.2 The analyzer shall be complete with sample conditioning system.

7.1.5.3 Analyser shall be provided with serial output and shall be integrated with Package vendor's control system.

7.1.5.4 The control unit shall be microprocessor based smart type with temperature controller, auto/manual calibration and zeroing facility, self diagnostic facility, with local indication and alarm for operating parameters, Automatic shut off on sample failure and automatic start up on revival of sample etc.

 All rights reserved

7.1.5.5 The control unit shall be weatherproof to IP-65, intrinsically safe and shall be suitable for hazardous area mounting.

7.1.5.6 Analyzer shall be capable of automatic temperature compensation.

7.1.5.7 The sample shall drain into a non-metallic pipe due to the corrosive nature of chlorinated water.

7.1.5.8 Self cleaning sensor assembly shall be considered to prolong sensor life and maintain accuracy.

7.1.5.9 The sample tubing shall be kept as short as possible to minimize lag time.

7.1.5.10 Ph compensation shall be provided wherever necessary.

7.1.6 ORP Analyser

The bidder shall provide a complete ORP Analyser with electrodes mounting accessories, sample handling system & indicating analyser transmitter.

The principle behind the ORP measurement is the use of an inert metal electrode (platinum), which, due to its low resistance, will give up electrons to an oxidant or accept electrons from a reductant. The ORP electrode will continue to accept or give up electrons until it develops a potential, due to the build up charge, which is equal to the ORP of the solution.

The analyser shall be stand alone panel mounted and protection class shall be IP67 . Suitable canopy shall be provided for the enclosure. Analyser shall have 4-20mA for indication in CR. Local display shall be digital LED type.

Sampling system shall be rugged construction and all tubing/ fittings shall be of SS 316 material (in inches only). Sample Flow Meter on Sampling Handling System shall be provided. Vendor shall submit the details of sampling system along with offer.

Measurement of ORP shall be in mV. The accuracy shall be less than 1 mV.

Range shall be +/- 2000mV.

7.1.7 Turbidity Analyser

The bidder shall provide a complete Turbidity analyser along with mounting accessories, sample handling system, calibration unit, and maintenance kit.

Turbidity is a measure of water suspended solids (SS) concentration. Turbidity measurement shall be done based on 90º light scatter principle (Nephelometry). The turbidity meter shall have following outputs:

- Analog 4-20mA output
- Self checking relay output
- Alarm Relay output

The sensor material shall be SS316L and shall have IP67 min, protection. The accuracy shall be +/- 2 % of reading (NTU) and repeatability shall be +/- 1 % of reading (NTU).

Auto calibration shall be required for all analyser. Zero & span calibration gas cylinder to be provided for the all analyser as applicable.

 All rights reserved

7.2. Flow Instruments

7.2.1 Flow Transmitters

D/P cells shall have measuring method on the floating capacitance technology. The signal transmitter shall normally be a 2-wire system and shall be capable of delivering rated current into external load of at least 600 ohms when powered with 24 V d.c. Protection against short circuit and reverse voltage shall be provided. Bodies shall normally be in stainless steel with SS316L internals. Integral 3- valve manifold similar to AGCO make model 4A shall be used for mounting transmitters on manifold for ease of maintenance. Material of manifold in general shall be SS316L but may vary depending upon service. Digital output indication shall be preferable on the integral output meter with the transmitter. All flow transmitters shall have sq.root extraction function.

Pressure elements in austenitic stainless steel is a requirement. The transmitter shall be furnished with an output meter or gauge with a sqrt scale. Smart type transmitters will be used with Hart V protocol. Overall accuracy for SMART transmitters shall be +/- 0.050% or better. Process connection size shall be 1/2” NPT.

All field transmitters shall be 2 wire type, 24 Volt DC, SMART with HART protocol, and shall be equipped with Local LCD type digital indicator. 2” pipe mounting, SS304 MOC brackets and other accessories, as applicable, Accuracy 0.050% of Span , Rangeability 1:100, Local Display configurable, SS MOC, Double Compression SS 316 cable glands, Exib IIA/B/T6, IP67, Wetted MOC SS316L, SS316L MOC Manifold, Housing Die-Cast Aluminium Epoxy Painted, Universal Hart Protocol with Latest Revision is required.

7.2.2 Rotameter with Transmitters

Rotameters or variable area meters may be used in pipe sizes from 1 1/2” and smaller. The meter shall be selected for normal flow at 50 to 60% of the span. In applications with toxic or inflammable fluids, glass tubes must not be used except for low pressure analyser sample flows. They may be used for severe corrosive services and of fluid of high viscosity. The metal tube meters shall be of stainless steel, PTFE lined or any other suitable lining for the service. The Indicator assembly shall be magnetically coupled and mounted with Rotameter body. Transmitters or Indicators on float extension are not recommended except for cryogenic services. The switch assembly shall be of proximity type. All Rotametres shall be metal tube type with transmitter. The rotameter transmitters shall have 4-20 mA output at 24V d.c. power on two wire system, which must wired to control system.

7.2.3 PRIMARY DIFFERENTIAL PRODUCERS

7.2.3.1 Orifice Plates

 All rights reserved

Orifice plates of the square edged concentric type shall be specified except where unsatisfactory for the application. Materials of orifice plate shall normally be AISI 316 unless special materials are required for the service. The maximum ratio of orifice to inside pipe diameter of 0.70 and minimum ratio of 0.30.

Orifice plates dimensions and calculations shall be in accordance with ISO 5167-1980. Minimum orifice plate thickness shall be 3.16mm.

The flow range shall be selected such that normal flow rates are between 50% and 70% of the flow upper range value.

Material of construction of orifice plate shall be 316L SS except where this material is unsuitable for the service because of corrosion or erosion considerations, in which case an alloy shall be chosen whose corrosion allowance is equal to or better than line material. Orifice plates dimensions, finishing, flatness, tolerances for dimensions and identification information shall be in accordance with ISO standard. Orifice plate shall be provided with tab handle, which is welded on the orifice plate and engraved with following information on the upstream of the tab handle:

- UPSTREAM or UP
- Instrument tag number
    - Orifice diameter
    - NPS (Nominal Pipe Size) and ANSI flange class
    - Material of the orifice plate
    - DP range & Meter (Flow) range

The tab shall also be in line with the Drain or Vent hole and shall indicate the direction of flow.

BIDDER shall submit the sizing calculations for orifice plates for review.

Pressure drop for orifice sizing shall generally be selected among the following values: 125, 250, 500, 625, 1250, 2500, 5000 and 10000 mm H2O with standard selection at 2500 mmH2O.

Orifice plates shall be installed on horizontal lines when practical. Vertical meter runs may be used for down flow of vapour and up flow of liquids.

Differential ranges for all liquid flow meters shall not exceed 5000 mm water. Typical

 All rights reserved

ranges for gas, steam or vapour meters are as follows:

Static Pressure	Diff. Range
(in Kg/Cm2g)	(in mmwc)
0.35 to 2.5	500-1200
2.6 to 6	1250-2500
Above 6	2500-5000

Orifice bore with diameter less than 0.125” shall be avoided.

a) Flange taps orifice shall generally be used for line sizes 2” to and including 18”. Above 18”line size, D and D/2 taps shall be used. Integral Orifice assembly with transmitter shall be used for line size 1 1/2 “or below (as per standard BS-1042)

Orifice assembly shall be provided with two sets of “Flange Taps” located in accordance with latest AGA standards. The orifice assembly shall be provided with jack screw for removal of orifice plate. In case of 2 out of 3 logic requirement, three different transmitters shall be used and no two transmitters shall share the common tapping. In such case six set of taps (independent tapping from Flange Itself , NO TEE / Elbow shall be used) shall be provided in orifice assembly. Instrument tapping connections shall be 1/2”NPT (F).ONE Set of spare flange ts required for 2oo3 configuration i.e. total FOUR Sets (8 Nos.) Of flanges tapping.

b) Orifice flanges shall be in accordance with the ANSI B16.36, ANSI B16.36a and applicable piping specification and shall generally be of weld-neck type only. The minimum pressure rating of flanges shall be ANSI 300 lbs.

Flanges larger than 3" shall have a pair of jack-screws. The mating flanged shall be aligned in such a way that jack-screws will be diametrically opposite.

Orifice flanges used at pressure ratings up to 600 Ib. shall be tapped ½” NPT(F) tap for 900 # above ¾” NPT(F). Orifice connections for Vena contracta taps or pipe taps ½” socket with schedule/MOC as per piping specs

c) For line size below 2” Integral orifice with corner taps shall be supplied as an integral assembly consisting of upstream and downstream straight pipes, integral orifice of 316L SS (as a minimum) installed along with H type manifold and SMART, 2 wire 24 V DC, DP transmitters with latest HART protocol (refer 7.2.1 for tx details). End flanges shall be as per piping specifications. Upstream and downstream pipes shall be honed from inside to

 All rights reserved

achieve smooth surface. Integral orifice meters, when used, shall be installed with block and bypass valves.

d) Upstream and downstream straight length shall be provided based on maximum d/D ratio of 0.70, in general. Where it is difficult to meet this requirement, the actual d/D can be considered for reducing the straight length as permitted by ' recommended practice shall be as per API-MPMS Recommended Practices and AGA Report No.3. The piping layout, where possible, shall be arranged such that straightening vanes are not required.

e) Orifice plates with RTJ flange connections above 2” shall be supplied with Carrier rings / Plate holder. Holder MOC shall be same as Plate material as minimum.

f) Meter taps shall be horizontal for liquids, condensable vapors and steam. The tap shall be on top for gas, non-condensable vapor, or liquids, which boils at maximum design ambient temperature at operating pressure.

g) The Meter Range flow shall be equal to the 1.5 times of normal flow or 1.3 times of the maximum flow and it shall be nearest higher multiple of 50/100/1000s of units of measure (in Engg. Unit) in round figures. This meter max range criteria specified is applicable to all other type of flow transmitters also.

7.2.3.2 Nozzles

ISA 1932 Nozzles may be used in high and medium pressure steam and BFW piping. Materials for nozzle element shall normally be AISI 316L steel unless special materials are required for the service. Dimensions and calculations shall be in accordance with ISO 5167-1980. Generally, branch pipe is required with the nozzle the same shall be machined from higher schedule pipe than the one used for the service or forged branch pipe shall be used if higher schedule pipe is not available. The branch pipe bore shall be same as that of nozzle ID and shall have mirror finish.

7.2.3.3 Venturi Tubes

Venturi Tubes or nozzles as per ISO 5167-1980 or similar type elements may be used to measure the flow of low pressure gases or liquids where loss of pressure is an important consideration.

7.2.3.4 Averaging Pitot tube/Annubar (Not to be used)

7.2.3.5 Local Flow Indicator

Motion balance (Barton cell type) type differential pressure indicator shall be used for local flow indication. Body and internals shall be of 316L SS. Process connection shall be

 All rights reserved

1/2" NPT(F) . SS316L 5-valve manifold with 1/2" NPT connection shall be used with the meter.

7.2.4 OTHER FLOW METERS

7.2.4.1 Mass Flowmeter

Coriolis type mass flow meter with local digital display of flow shall be used to measure the process flow where high accuracy is required. Normal accuracy for mass flowmeters shall be 0.15% of span. The sensing element shall be straight/U-tube, matl. 316L in general.

7.2.4.2 Vortex Meter

Vortex shedding meters may be used for wide range of flows for gases and liquids. The measured flow shall be temperature compensated.

Insertion type vortex meter may be used in utility services for line size more than 6" inplace of Pitot /Annubar/Pitot Venturi tubes.

7.2.4.3 Ultrasonic Flowmeter

Ultrasonic flow meters (non- insertion probes preferred) based on the "time-of-flight" method shall be used. Meters based on the "Doppler" principle are less accurate and shall not be used. Ultrasonic flow meters shall be considered for large turn downs and where pressure drop is not permitted. Upstream and downstream straight lengths shall be as per standard.

7.2.4.4 Electro-Magnetic Flowmeter

Electromagnetic Flowmeter with ceramic lining shall be used for the measurement of flow with high accuracy for highly viscous and corrosive services. Instrument shall be suitable for Acid and alkaline measurement.

7.3. LEVEL INSTRUMENTS

Level Instrument shall be suitable for Acid and alkaline measurement. Guided wave radar type instruments (SMART) shall normally be used for level measurement up to 2400 mm, wherever guided wave radar cannot be used then only external displacer type transmitter to be used.. Differential pressure transmitter (Capillary type) shall be used for level measurement above 2400 mm and for services requiring purge or where liquid might boil in external portion. Capillary type DPTs shall not be used in vacuum services. Internal displacer type of level transmitters shall be not be used. Remote Seal PT/DPT shall be with min 5 mtr Capillary with SS armoured in PVC sheath of Protection with DRIP RING

 All rights reserved

and with Ball type Isolation Valve. For Vessel/Equipment requiring more than 5 m capillary electronic remote seal shall be provided. Process connections shall normally be 3” flanged.

7.3.1 External Displacement

Displacer type level instrument shall be avoided and guided wave radar type or remote diaphragm seal DP shall be used in their place if suitable to process condition.

If unavoidable External displacement type instruments shall generally be used (with owner/PMC approval) for small spans only (The standard ranges shall be: 350 mm, 810 mm., 1200 mm). The cage material shall normally be forged material conforming to the service requirements. Where the vessels are of alloy steel construction, the body material shall be equivalent or of a better material. The displacer shall be in stainless steel (SS316L) and the torque tube in inconel. If LVDT type transmitter in place of torque tube is selected then the range spring of such transmitters shall be Inconel and cannot be used for temp. more than 330 degree C. Process connections shall normally be 2” flanged with side-side connections.
For high temperature as well as low temperature and cryogenic services, torque tube heat insulation extension or torque tube extensions shall be applied. Radiation fins or extensions shall be used for temperature above 200 degree C or below 0 degree C.

7.3.2 LEVEL GAUGE GLASS

Gauge Glasses

Glass gauges shall be avoided and magnetic type level gauges shall be used if suitable to process condition. If unavoidable Gauge Glasses shall normally be reflex type for all process services, except for boiler drums bicolour types shall be used, and in corrosive services. Where transparent gauges with glass protection and illuminators shall be used, Illuminators shall be explosion-proof in hazardous areas. Gauge glass columns will not exceed 1500 mm. Multiple level gauges shall be used for visible lengths more than 1500 mm.

Transparent type gauge glasses (double glass) will be used for services in which a level may not be distinguishable, such as interface services, between different liquids, where mica shields are required and fluids of high viscosity or high solid content.

For corrosive services, such as strong acids or alkalies, special devices such as magnetic followers or plastic ("KelF") coated glasses shall be used.

Level gauges shall be supplied with a pair of off-set shut off valves with ball check with

 All rights reserved

SS304, or material suitable to process, as its MOC.

For cold services where temperature is below 0 deg C a non-frosting gauge will be used. Glass tube level gauges shall be avoided.

Gauge glass columns will not exceed 1500 mm. Multiple level gauges shall be used for visible lengths more than 1500 mm.

7.3.3 Non Contact Radar/Guided Wave Radar

Displacer type level instrument shall be avoided and guided wave radar type shall be used in their place if suitable to process condition.

Ultrasonic / Radar type Instrument shall be used for large liquid storage tanks. Guided Wave Radar type level instruments, where used, shall be external type with side / side connections and rotatable transmitter head. Vent and drain valves shall be provided. Non-Contact Radar type level shall be used on corrosive, congealing, slurry services where diaphragm seal type transmitter cannot be used. Dip tube can be used in above services where radar cannot be used. In case of heavy congealing service (sticky liquid) rigid single lead type GWR shall be used. All guided wave radar will be coaxial type, where high accuracy or interface level measurement is required. However single rod design to be avoided to extent possible).

Guided Wave Radar Level transmitter shall be applicable for liquids or slurries, hydrocarbons too water- based media. In absence of dielectric constant for the process fluid, Bidder shall confirm the suitability of Guided Wave radar Level Transmitter for such applications and Bidder shall suggest the suitable model for the same. Bidder shall suggest the suitable model for Interface applications like oil on water, Hydrocarbon on water, etc. Electronics shall be capable of measuring upper liquid and interface level simultaneously. Selection shall be available for analog output signal from level transmitter corresponding to upper liquid or Interface. Process connections shall normally be 2” flanged with side-side connections.

For sump levels, Guided wave radar for PLC and non- contact type radar level instrument for interlock shall be used within accuracy ±3mm. For servo gauges where used, calibration chamber with access for removing the displacer for maintenance purpose shall be provided.

7.3.4 Magnetic Level Gauges

Magnetic type level gauges shall be considered for:

- Cryogenic services

 All rights reserved

- Fluids that attack glass (e.g., strong acids, alkalies, boiler feed water)
- Light ends services
- Toxic services
- Pressures above 500 psig (3450 kPa) special consideration must be given to the design of float for high pressure

Magnetic- type level gauges shall consist of a liquid chamber enclosing a float which is magnetically coupled to a rotary wafer-type indicator. It shall be top or side mounted type. The liquid chamber shall be one- piece construction with a minimum internal diameter of 50 mm, provided with a bottom flange for removal of the float, vent and drain connections. Indicator shall be adjustable around the chamber with provisions to indicate float failure.

The indication shall consist of bi-colour (red/white, silver/black) magnetic rollers mounted on outside the magnet chamber. As the float rises or falls with the liquid level each roller rotates 180 Deg and so presents a contrasting colour.

Floats shall be designed and manufactured for suitable to the process parameters. It shall be designed to be adequate for hydrostatic test conditions. Floats shall be hermetically sealed, no vented or pressure equalized construction shall be allowed.

7.4. PRESSURE INSTRUMENTS

7.4.1 Pressure Transmitters

Pressure Transmitters and differential pressure transmitters shall be modern inherent motion-free type. Bodies shall normally be in stainless steel with pressure elements in SS316L. Two valve integral manifold of SS316L material in general shall be used with pressure transmitters.

The signal transmission should normally be a 2-wire system and shall be capable of delivering rated current into external load of at least 600 ohms when powered with 24 V. Protection against short circuit and reverse voltage shall be provided. Pressure transmitters shall normally be electronic type and shall have digital transmitter.. Smart type transmitters will be used with Hart V protocol. Overall accuracy for SMART transmitters shall be +/- 0.050% or better. Process connection size shall be 1/2” NPT.

All field transmitters shall be 2 wire type, 24 Volt DC, SMART with HART protocol, and shall be equipped with Local LED type digital indicator. 2” pipe mounting, SS304 MOC brackets and other accessories, as applicable, Accuracy 0.050% of Span , Rangeability 1:100, Local Display configurable, SS MOC, Double Compression SS316 cable glands, Exib IIA/B/T6, IP67, Wetted MOC SS316L, SS316L MOC Manifold, Housing Die-Cast

 All rights reserved

Aluminium .Epoxy Painted, Universal Hart Protocol with Latest Revision is required. Measuring principle of sensor (PT,FT,LT,DPT) shall be either capacitance or piezoelectric or Inductive.

7.4.2 Pressure Gauges

Gauges for process and utility services shall be industrial SS316L Bourdon gauge/diaphragm or spring bellows type as per process requirement with the case in 316L stainless steel. The gauge for 60 kg/cm2 above pressure shall preferably be a safety type with solid front where pointer and glass are partitioned off from the sensor by a solid disc. Pulsation dampeners shall be installed with the gauges where pulsating pressure occurs. Process connection shall be 1/2" NPT (M) bottom in general. Bezel rings shall be screw on pattern. Dial Size minimum 150mm

Blow-out discs are required for all pressure gauges except for instrument air services.

Vibration proof gauges or remote seal type shall be used if the surrounding environment is subject to vibration.

Minimum accuracy for pressure gauges shall be +/- 1%,

Pressure gauges for vibrating services shall be glycerine filled type or with pulsating dampener device.

7.4.3 Pressure Switch (Not to be used)

7.4.4 Diaphragm seal

Diaphragms or liquid seals shall be inserted between the instrument and the process for corrosive or highly viscous fluids. For all services element material shall be minimum SS316L.

Pulsation dampeners shall be furnished with pressure transmitters on pulsating services.

All catalyst vessel's dP measurement shall be with ERS (electronic remote seal).

Remote Seal PT/DPT shall be with min 5 mtr Capillary with SS armoured in PVC sheath of Protection with DRIP RING and with SS304 Ball type Isolation Valve. For Vessel/Equipment requiring more than 5 m capillary electronic remote seal shall be provided.

DP transmitters with diaphragm seals are envisaged, where condensing leg required to be filled in normal DP transmitters, at all those locations, remote seal type DP transmitters are to be used. Also, wherever there is a control and interlock on level measurement, one transmitter shall be remote diaphragm seal type and one will be

 All rights reserved

guided radar type with Material: Minimum Inconel. Guided Wave radar may be used for non-critical applications. Process connection will be 3” flanged and sealing liquid must be selected as per process requirement.

7.5. TEMPERATURE INSTRUMENTS (Duplex Type)

7.5.1 Thermocouples

Thermocouples shall normally be the sheathed type with high purity magnesium oxide insulation. The hot junction shall be isolated from ground. Sheath diameter shall normally be 6mm (1/4”) Inconel 600 sheath material shall be used for design temperatures above 400 degree C, whereas ordinary SS material can be used below 400 degree C. The nominal wire diameter shall be approximately 0.19 x sheath OD. The casing material must be SS316L.

Inputs from thermocouples shall be provided with cold junction compensation and downscale burns out feature for high temperature shut downs and vice versa for low. A passive alarms shall warn about the burn-out.

In general type K thermocouples shall be used according to IEC 584, class-1. All temperature elements shall be duplex type, one connected and the second one shall be used as spare.

Thermocouple head must be of die cast aluminium with epoxy paint to with stand the corrosive environment.

Unless otherwise specified, thermocouples cable color coding shall be in accordance with the latest edition of ANSI-MC 96.1.

The type of thermocouple shall be selected based on the following guidelines as minimum:

Copper-Constantan (ISA-Type-T)	(-) 200 to 200°C
Chromel-Constantan (ISA-Type-E)	(-) 200 to 600°C
Iron-Constantan (ISA-Type-J)	(-) 40 to 750°C
Chromel-Alumel (ISA-Type-K)	(-) 180 to 800 °C
NiCrSil - NiSil (ISA-Type-N)	0 to 1200 °C
Platinum Rhodium-Platinum (ISA-Type-S or B)	600 to 1600°C

7.5.2 Resistance Temperature Probes

 All rights reserved

Resistance Temperature Probes shall be considered for applications where very narrow spans and high accuracy are required as well as low temperature service. They shall be 6mm (1.4”) stainless steel sheath type similar to the thermocouples and with a Pt 100 ohms (0 degree C) element. The sensors shall be duplex type and shall be spring loaded for vibration proof. The elements shall conform to DIN 43760 or IEC 751. The casing material must be SS316L. RTD head must be of die cast aluminium with epoxy paint to with stand the corrosive environment.

Class 'A' / Class '1’ tolerance as per IEC 751 / 584-2 shall be specified for all RTD and thermocouple sensors in complete temperature measurements for all open/closed loops and interlocks/Logic.

7.5.3 Temperature Transmitters

Temperature transmitters shall be Remote mounted type (on 2” Pipe), Smart with latest HART protocol and integral digital output meter, dual compartment type.

Head mounted transmitters shall not be used.

Conventional transmitter shall have universal input for thermocouple / RTD and output 4-20 mA DC for 2 wire system.

Transmitter output signal shall be linear and directly proportional to the measured temperature with overall accuracy of +/- 0.1% FS. TT body must be of die cast aluminium with epoxy paint to with stand the corrosive environment

Thermocouple transmitters shall have cold junction compensation and thermocouple linear characterization. Resistance temperature transmitters shall have resistance element linear characterization.

Burnout protection (selectable Up Scale / Down Scale) must be provided for temperature transmitters.

No temperature switches are to be used. The same is to be achieved through transmitters which shall be directly connected as analog input to PLC.

Temperature transmitters are to be provided for all temperature measurement (closed/open/interlock) loops. All process temperature measurements shall be done through Temp. Transmitters. No temp. Input shall be connected directly to ESD/PACKAGE UNITS. MUX is not allowed.

7.5.4 Thermometers

 All rights reserved

Thermometers shall normally be bi-metallic, heavy duty, weatherproof (IP 65), adjustable angle connected type with 150 mm dial as a minimum, dials of smaller size may be used for auxiliary services on machinery. Casing material shall be SS316L.

Liquid filled indicators will be used only where indication is required to be remote Case and stem shall be in stainless steel. Dials shall be of white, non-rusting metal with black figures.

For local temperature control upto a maximum scale range of 530 deg C, liquid filled sensors with capillary extension shall be used.

Filled system instruments when used shall be fully compensated for ambient temperature variations.

Capillary shall be SS armoured and length of which will not generally exceed 3 mtrs.

Range should be selected so that normal operating temperature is approximately 70% of full scale, and the maximum expected temperature is approximately 90% of full scale.

7.5.5 Thermowells

Thermowells shall normally be made from bar stock material.

Flanged thermowell shall be used of 1 1/2” size, threaded thermowell shall not be used, except where accepted by piping specifications, in such case they shall be 1” NPT(M) and real welded. Flanges rating, facing and material shall be in accordance with the equipment or piping standard. Thermowell flange rating shall be 11/2” 300# minimum.

Thermowell shall be used for thermocouples, bimetallic thermometers, filled system and for temperature test points (TW).

Thermowells in vapor-liquid applications, inside columns, shall be located in the liquid phase, unless otherwise dictate by process requirements.

Test wells shall be equipped with threaded plugs and chains.

The preferred mounting position of thermowells, in horizontal pipelines, shall be in the upper half of the pipe.

For lines up to 3 inch size, the pipe shall be enlarged to 4 inches.

Thermowell material in general shall be of AISI 316L SS.

Immersion length of thermowells for different line sizes shall be as follows:-

 All rights reserved

Line Size	Immersion length (U)
4" to 6"	280 mm
8" and above	320 mm
Vessels	400 mm

Immersion length is based on 200 mm length between flange face and inner well of pipe and approx. 60% insertion in the pipeline. In vessels, where fouling with vessel internals is expected, the immersion length shall be suitably modified. Other sizes and immersion lengths may be considered based on special condition/actual requirements.

The design of the wells shall be verified by means of stress analysis, resulting from stream velocity condition. The wake frequency shall not exceed 66% of the thermo well natural frequency. Wake frequency calculation is required for all thermowells. Bidder has to submit Wake frequency calculations for all thermowells as per latest PTC 19.3. Velocity collars not to be used.

7.6. CONTROL VALVES

Valve types shall be selected, pneumatic diaphragm/piston operated globe, ball or butterfly shall be selected taking into account such factors as piping, operating and design conditions, fluid being handled, tangibility required, allowable leakage, noise and other special requirements. The valves shall have smart electropneumatic positioners of same OEM make as the valve. All control valves shall be provided with SMART valve positioner with valve position signal feedback connected to control system by 4 to 20 mA analog signal. It shall be HART compatible. Seat Leakage shall be chosen in accordance with process demands and safe operation of the plant and in accordance with AISI B16.104-1976. However, in general, the globe valves used shall be of class IV leakage minimum as per ANSI B6.104 in general. Metal seated valves shall be preferred instead of soft seated valves. Soft seat requirement shall be evaluated by PMC/Client on case to case basis. However, in general, the globe valves used shall be of class IV leakage minimum as per ANSI B6.104 in general. For vent services the leakage class shall be class V or VI depending upon process requirement.

Safety shutoff valves must not be used in throttling service during normal operation.

Noise abating devices shall be provided with valves where noise level at the outlet of valve at a distance of 1 metre all around is more than 85 DBA for valve which have operating times of 5 minutes or more in general and which are only working during start up and in upset conditions. For continuous operation the allowable sound level shall be 85 dBA. All noise abating plates, expanders, flanges, gaskets, studs & nuts shall be in

 All rights reserved

the scope of valve manufacturer. The noise abating plates shall be of wafer design for easy removal for maintenance. Source treatment for noise shall be preferred over path treatment and for high noise vent applications “DRAG” type trim shall be specified.

All valve bodies shall be cast or forged. Stainless steel bodies shall be acceptable in place of alloy steel bodies, if not available, for low temperature application.

The valve body, positioner and actuator body material shall be suitable to corrosive environment. Suitable lining shall be provided inside wetted parts as per application.

Flanged bolted type gland packing boxes shall be used, unless other specified. Gland packing shall normally be self-lubricating type. Packing shall be PTFE type up to 200”C. For temperature above 200 “C, grafoil is to be used. Usage of asbestos is not allowed in any part.

Bellows seals shall be used wherever gland leakage is not permissible like toxic / hazardous product like carbon monoxide gas, etc.

As a minimum, trim MOC shall for all control/on-off valves shall be SS316L. By default, all Guide MOC shall be hardened stainless steel like 440 C, 17.4 PH. For erosion service, high pressure drop, cavitating service hard surfacing of plug and seat material, satellite shall be used for all cases as specified in above point 22.1. Special cases valve may require 17.4PH seat and 440C solid plugs or other material like Hastelloy, Monel, Zirconia, duplex steel, etc. for severe services like steam, urea grade, carbamate solution, acid, etc.

Mechanical stopper shall be provided as per process recommendations for Min/Max. Flow condition.

On line replaceable trims shall be considered for all high pressure valves of butt-weld or socket weld connections. Trim characteristics shall be equal percentage, unless otherwise specified. For high erosion service or in steam service where, the delta P is higher than 5 Kg/Cm2, hardened trim with stelliting shall be used. When this alone is not sufficient, in such cases, special Anti-cavitating trim or shall be selected. In general, for all trims, hardened full stelliting shall be used, as a minimum.

All on-off valves shall be ball type on-off valves only. The ball valves of up to 2” size shall be floating ball design with full bore design, unless otherwise specified. Other ball valves with higher size can be trunnion supported ball type design type.

For all shutdown valves on fire safe applications, air volume tank shall be supplied for the storage of air volume for minimum 3 stroke operation.

 All rights reserved

Oxygen service valves shall be de-greased completely and certified for oxygen service use. MOC for body shall be Monel and trim shall be Inconel 600 only.

Split body design for ball valves acceptable where top entry ball design has not been considered for economical reasons. Mufflers shall be provided on ball valve vent air lines for noise suppression. Spring loaded seat and hard chrome plated ball shall be a standard feature for ball valves, in general. Wherever springs come into picture, vendor to ensure corrosion resistant spring steels are provided.

All control valves/ Actuators (pneumatic & Motorised) shall be painted with corrosive resistant epoxy paint. SS bug screen shall be provided for the exhaust ports.

All valve actuators shall be selected for a minimum operating air pressure of 4.0 kg/cm2g. The actuators shall be diaphragm or piston actuators in general. Diaphragm actuators with single or concentric multi-springs shall be used. volume tank with airlock relay , booster relays shall be avoided as far as possible.

Rotary rack and pinion pneumatic actuators may be used with ball and butterfly valves for on-off services.

In general, if otherwise not specified in the valve data sheet the time for full travel shall not exceed 10 seconds.

Wherever handwheel is required with a valve the same shall be side mounted type.

All split range functions for valve operations shall be carried out in control system and split range provision in valve positioners shall not be necessary.

Butterfly valve bodies shall be of wafer design. Lug type body shall be considered for size above 12”. Face to face dimensions shall conform to ANSI B 16.10 and ANSI B 16.47 wherever applicable. Butterfly valves shall be used for high flow, low pressure drop below 10 kg/cm2g.

All instrumentation butterfly control valves shall be triple offset type only.

Non destructive test like radiography, ultrasonic, die penetration and magnetic particle shall be carried out for cast and forged bodies conforming to procedures laid down in ANSI B16.34. Radiography or ultrasonic test, if not specifically mentioned in the data sheet, shall be carried out for cast or forged bodied of rating 900 lb. or above.

Valve bonnets shall be in general of bolted bonnet design as per ASME B 13.3 par 307.2 with minimum four bolts.

 All rights reserved

Smart E/P positioners with position transmitter along with valve signature software to be provided for all control valves. It shall be HART compatible, The software shall be provided for remote configuration and diagnostic analysis too.

Actuator sizing shall be done at 4 Kg/cm^2.

Handwheel (Side-mounted) for All regulating control valves to be provided

By-pass valve provision shall be as per process licensor requirement.

The control valve % opening shall be at minimum flow 10-20%, for normal flow 50 to 70%, for maximum flow 75 to 85%.

All on – off application valve shall be fixed with necessary limit switches.

Valve Sizing shall be used on a maximum flow rate of approx. 1.5 time normal flow or 1.3 times the max. flow, whichever is greater, and the process conditions that exist at the increased flow (Pressure and differential pressure). Valve lift shall be approximately 70 % for equal percentage and 60 % for linear characteristic plug design at normal flow. It shall be checked that the calculated and the selected valve also covers start-up and stop conditions. In cases where over sizing shall not apply, it will be specifically mentioned in the Instrument Data Sheets.

The fluid velocity at outlet flange shall not exceed 6 m/sec for liquids whereas the velocity of gas or vapor shall not normally exceed 0.3 Mach under operating conditions. To meet this, valves shall be selected having reduced trim, labyrinth plug or cage trim as manufacturer standards.

Bidder shall submit the sizing calculations for all control valves.

Face to face dimensions of the control valves shall be as per ANSI/ISA-S75.03.

Direction of flow indication shall be engraved or embossed on the body.

Stroke time of the antisurge valves shall be 2-3 seconds and for critical services shall be as defined by process licensor or as mentioned in individual data sheet.

7.6.1 Control Valve Test and Inspections

Valves shall be tested in accordance to individual specification which shall cover but not limited to:

- Visual Inspection and dimensional check

 All rights reserved

- Liquid Penetrants examination on stellite coating as per ASME B16.34 ann D.

- Radiographic, ultrasonic, magnetic particle as per ASME B16.34

- Hydrostatic Body Test - Duration 3 min. (including all parts in assembled condition like body, gland, all joints)

- Impact test

- Seat leakage test as per ANSI B16.104/FCI 70.2

- Performance tests and Functional tests

- Leakage test from actuators and seals and packings

- Diaphragm head test

- Complete actuator leak test

- Helium leak test for control valve with bellow seals

- Stroke calibration

- Stroke speed test

7.6.2 Limit switches / Position Switches:

7.6.2.1 All type of limit switches shall be 2 wire, proximity type sealed, intrinsically safe certified. Limit switches shall be provided both for close and open positions for all shutdown valves. The material of its construction shall be resistant to acid environment.

7.6.2.2 The make shall be P+F only. The sensor shall be generally cylindrical NAMUR sensor type proximity switch. The diameter and sensing range shall be selected based on application.

The MOC of sensor shall be SS316 or acid resistant body.

All limit switches sensor shall be adjustable with the threaded length and check nut arrangement.

Flying lead type loose connections for NAMUR sensors are not acceptable. All these NAMUR sensors installed on any instruments to sense the position shall be housed in a closed box certified for weatherproof to IP65. The gland size shall be ½” NPT(F).

7.6.2.3 All ON-OFF type application valves taking in part in interlock/shutdown shall be provided with Open and Close type NAMUR sensor as limit switches. The sensors along with

 All rights reserved

enclosure shall be installed in control valve in such a way that it can be removed with ease for maintenance.

7.6.2.4 Limit switches shall not be used for Control Valves.

7.6.3 Actuators

7.6.3.1 Generally, control valve actuator shall be of the spring and diaphragm, pneumatically actuated type. Standard air control signal to positioner shall be 0.2 to 1.0 kg/cm2g. For larger dP shut offs, higher spring range/higher areas shall be considered.

7.6.3.2 Actuators shall be single acting type for all valves.

7.6.3.3 All valve actuators shall be designed with 1.5 times factor of safety.

7.6.3.4 Piston type actuators (spring return type) with or without fail-safe capacity tanks (minimum of 2 strokes to be possible in case of air failure) shall be considered for high-pressure drop services or if actuator force requirements fall beyond the normal range of diaphragm actuators. All actuators shall be adequate to fully stroke the valve under the maximum differential pressure specified by the process requirements.

7.6.3.5 Air filter Regulator filter to be 5 micron. Miniature type, plastic body & drain assemblyetc as parts of air filter regulator are not acceptable.

7.6.3.6 Actuators must be painted with corrosion resistant paints and all its springs must be corrosion resistant spring steels. SS bug screen shall be provided for the exhaust ports.

7.7. **DELETED**

7.8. **PRESSURE RELIEVING DEVICES**

7.8.1 **Pressure Relieving Devices**

All Pressure Relieving Devices shall be sized in accordance with applicable local and national code requirements. Formulas shall be in accordance with API RP 520, 1990 and ASME Codes section I and VIII.

7.8.1.1 Percent Overpressure and Accumulation used in calculation of sizes of relieving devices shall be :

Overpressure

3% - Steam services where ASME Power Boiler Code applies.
10% - Gas or Vapour service.
15% - For liquids and pump discharge lines with 6% system accumulation

 All rights reserved

(Power Boiler Code) and with 10% system accumulation (Pressure Vessel Code)

21% - Fire exposure on unfired pressure vessels.

10% - Liquids for thermal relief of pipelines or vessels Accumulation

10% - Gas , Vapour and liquid where ASME Pressure Vessel Code applies

16% - Gas , Vapour and liquid where ASME Pressure Vessel Code applies and the system is protected by means of multiple valves.

7.8.1.2 **Nomenclature**

Nomenclature used shall be in accordance with API RP 520.

7.8.1.3 **Safety and Relief Valves**

Safety and Relief Valves shall normally be direct spring loaded type. Balanced bellows valves shall normally be furnished for relief into closed flare and slowdown systems, if the developed back-pressure exceeds 10% of the set pressure. Bellows shall also be specified where leakage of gas from the seals are not permitted during normal plant operation. Steam jacketing may be considered necessary to keep some valves and lines warm at all the times to avoid the solidification of the lading fluid.

Full nozzle types of valves shall be specified for sizes 1” or above.

Test gags shall be furnished on all safety and relief valves. Test gags shall be removed and transferred to Owners possession after testing, clearly labelled with the tag number of the valve.

Lifting levers shall be furnished for exposed spring bonnets on valves on steam and hot water services, on air valves and hot water service valves with closed bonnets.

Bonnet construction shall be plain closed bonnet for toxic and inflammable gases as well as vapour and liquids. Exposed bonnet shall be specified for steam service and in Boiler feed water service above 200°C. Bonnet extension shall be used above 400°C.

Springs shall be of carbon steel for normal process operating temperature of (-) 25°C to 200°C and tungsten alloy or high temp. alloy steel above 200°C. Stainless steel spring may be used for services below (-) 25°C. Carbon steel is permitted above 200°C for open bonnets.

Blowdown shall be between 5% to 7%. For steam services under Power Boiler Code as per ASME the blowdown shall be 3% - 4%

 All rights reserved

All connections shall be flanged in general with facing and rating in accordance with the piping specification or API 526 whichever is higher.

Centre to Centre dimensions shall be in accordance with API 526

7.8.2 Rupture Discs

Rupture discs may be used in lieu of or in combination with safety and relief valves, where applicable or required. For disc rupture trip or alarm disc shall be with bursting sensors.

7.8.3 Pressure and Vacuum Relief Valves

Pressure and Vacuum Relief valves for storage tanks shall normally be of the weight loaded or pilot operated type, and sized in accordance with API RP-2000 Tank Venting Code, or Local Codes if they govern.

7.8.4 Thermal Relief Valves

For thermal relief of accumulated liquids in pipelines and vessels 1” x 2” size valves shall be used in general.

7.8.5 Centre-to-Face

Centre-to-face dimensions shall be in accordance with API 526.

7.9. SWITCHES AND SOLENOID VALVES

7.9.1 Switches

Process switches, shall be realised through field transmitters only. If for some packages, process switches are unavoidable same shall be provided with sealed micro switch contacts rated for the specified application. Contacts shall be 1 no. DPDT preferably. Otherwise 2 nos. SPDT can be considered. All switch contacts except those used in intrinsically safe circuits shall be silver plated. Contacts used in intrinsically safe circuits shall be suitable for the applications. Switches shall be hermetically sealed type. Switches shall be connected through interposing relays**.**

7.9.2 Solenoid Valves

Solenoid valves shall normally be used to actuate other instruments/valves connected directly to the process. The SOVs shall be SIL3, direct acting type (3/2 external pilot operated, universal type, low power intrinsic safe type, with manual override and LED indication). Protective enclosure shall be IP 67 and the coil insulation H class or better suitable for continuous operation in 85 degree C ambient temperature (max. surface

 All rights reserved

temperature in sun) for outdoor service. Body materials shall normally be stainless steel 316. Solenoid valves will be powered by 24V DC or through barrier, insulation class 'H' and orifice size 9 mm. The D.C. solenoids shall not have in built rectifier to operate with A.C voltage. The d.c. solenoids shall be used as an alternative to A/C solenoids only for low current intrinsic safe operations.

All solenoid valves shall be fitted with 1/2" NPT (F) SS 316 double compression cable gland connection. The cable entry should be from bottom only and solenoid coils must be hermetically sealed. SS bug screen shall be provided for the exhaust ports. The sealing medium of the SOV's will be EPDM or better (will be discussed during the detailed engineering).

8. CONTROL SYSTEM DESIGN CRITERIA

EXPANDABILITY

Systems shall be designed with 20% installed pre-wired spare capacity for all I/O type cards of each category for project development. The sparing supplied shall be for "complete loop"; i.e. corresponding marshalling, power supply, terminals/barriers, interposing relays, pre-fab cables other accessories, etc. and its space, and panel cut outs where appropriate, etc.

To allow for future expansion 20% spare capacity shall be allowed & terminated in multi core cables, junction boxes, marshalling racks, etc,

Communication networks and cables shall have a spare load capacity of 50% as a minimum.

Plant wide networks shall have a node connection spare allowance of 50 % as a minimum.

Local networks shall have a node connection spare allowance of 30% as a minimum.

Operators' Keyboard

This shall be used by plant operators along with each Operator station display unit for operation of the plant. It will have multiple assignable keys to directly open pre-programmed display as well as few other system typical templates for selected tags including controller group display, trend, configuration display, alarm summary pages, etc. There shall be both numeric and alphabet keys and dedicated function keys on membrane type operator keyboard each of which must be freely programmable. There

 All rights reserved

shall be one no. of operator keyboard with each of the operator stations.

This shall be membrane type fully dust proof and spill proof & corrosion proof.

Key lock switch / password switch shall be provided for operator/supervisor/engineer security levels.

Dummy Consoles/Filler Panels shall be provided to maintain aesthetic and mounting instruments like indicators, annunciators etc. as well as for push buttons, lamps, key switches, paging system hardware.

Entry into the Marshalling Panels shall be through SS316 ET double compression cable glands only.

PLC CONTROL SYSTEM

8.1. **General**

The operation and control of ZLD Plant shall be through Process PLC based Control system. The system shall be microprocessor based programmable logic control (PLC) with fault tolerant redundant processors based on DMR technology.

The PLC will be used to provide protection and controls for the entire plant.

Following minimum functions are provided on the OS (Operator station):

1. Area wise display of the plant.
2. Operation of the plant from the OS.
3. The schematics will be having dynamic parameters like valve open / close and motor running/ fault indications

The Control system shall perform any of the following functions for safety of the plant from control room.

- Total Shut Down
- Unit Shut Down

It will perform the following functions also:

Data Display

Process Control

Process and system alarms

Logging

Real Time trends & Historical trend

Dynamic Graphics

Report Generation (shift, daily, weekly, monthly and on demand)

System diagnostics

 All rights reserved

The following shall be adhered to while selecting the DMR system

a) Redundant CPU's shall be applied. The CPU shall possess the capability to solve application logic, store the application program and should support IEC-61131-3 programming, and it should have an OLED display showing status.

b) If a CPU fails, the other(s) shall continue to operate. Single CPU operation system to be certified to operate without any time limitation of faulty CPU repair. The CPU shall provide Ethernet ports with speeds of 10/100/1000Gbps. There should be a dual synchronization link provided between the redundant CPUs to eliminate any single point of failure.

c) Dual Redundant buses shall be applied.

d) All closed loop shall be Redundant

e) Redundant communication interfaces shall be supplied.

f) Redundant Power supplies (at least three in parallel) shall be supplied.

g) In the event of a failure of a fault tolerant component, power supply or other function, of the system shall change over to "single mode" operation without causing nuisance trips and also generate alarm on Operator and Engineering console.

h) In case of failure of complete processor system, i.e., system outputs shall take fail safe state automatically unless otherwise specified.

i) A minimum intel or compatible microprocessor operating at speeds no less than 1GHz as the main processing element .A min of 32Mb of retentive user memory shall be on board for user configurable application data storage and documentation storage.

Operator interface for critical trips shall be mosaic display with illuminated push button for trip, reset, inactivation etc. and LED indication for each element of trip & actions.

The operator will be informed about a trip situation by a warning sound (to be different from the audible signal from the alarm system), and a LED display will clearly inform about the alarms in trip position. The first up alarm will flash.
Scan time shall be maximum 250 msec. CPU loading shall not exceed 50%, Bus Communication modules, Power Supply and I/O cards shall have 100% redundancy and fail safe certification.

 All rights reserved

System Redundancy

Following system redundancy shall be available as a minimum.

1.	Controller (CPU for control, I/O communication, network communication)	1:1
2.	Communication Bus	1:1
3.	I/O communication modules with CPU (I/O bus between CPU and I/O with all necessary hardware)	1:1
4.	Main data highway	1:1
5.	Communication Cards	1:1
6.	System Device	1:1
7.	Power supply (Power supply for all CPUs, I/O power supply modules)	1:3
8.	History	1:1
9.	Modbus/Serial interface	1:1

10. OPC server: OPC server, If applicable shall have RAID-5 configuration with firewall.

11. System server (for server based PLC): Redundant (1:1 redundancy)

However, lamp drive cards, supporting mosaic need not be redundant also. Active isolator/barriers need not be certified for fail safe operation.

The operator can bypass trip alarm inputs, which may be necessary in abnormal situations. A lamp shall indicate that the trip alarm is inactivated. The operator will be warned by sound and fast flash if the inactivated circuit goes in alarm status.

The system shall include an event recording system, and it shall be considered to store about 500 events. The system should have SOE backup facility for 30days. Sequence event recorder (SOE) of 1 msec, resolution to be envisaged.

Display colours shall be in accordance with the following:

Alarm and Trip (safety operations)	: Red
Pre-alarm for trip (safety operations)	: Orange
Indication for by pass of trip (safety operations)	: Red
Equipment in operation (alarms and pilot lights)	: White
Ready (standby of equipment)	: Green

 All rights reserved

The mosaic panels shall be mounted on auxiliary consoles of PLC operating console.

Consumables like printer paper, cartridges, fuses etc shall be supplied along with the PLC control system for a minimum period of one year duration.

Loading philosophy (with 20% installed spares and 20% future expansion).

Control Processor	50%
Communication Processor	50%
Communication Bus	50%

8.2. PLC requirements

a) All systems' all cards shall be supplied with ISA G3 level or equivalent coating for environmental protections. The controller shall support built-in high-availability with hot-standby controller redundancy. The Controller shall be ISA secure certified as per IEC 62443-4-2 & It should also provide additional provisions around password protection, encrypted communications, encrypted firmware updates. The controller shall support high speed redundancy synchronization and failover using an Ethernet or other form of synchronization network. In the event of a failure of one controller or if stopped for maintenance purposes, control shall fail over to the standby controller within at least 500ms

b) ISOLATIONS

Analog I/Os to Field : Galvanic Isolation through safety barriers

Analog I/Os Module : Channel to Channel Galvanic Isolation

If individual channel to channel isolation is not available with system vendor, then only Isolation shall be provided in a group of 4 channels as per system vendor design. Digital Input to Field : barriers + optical isolators on cards

Digital Output to Field : Interposing relays + smart barriers for monitoring purpose

c) PANELS:

All panels shall be either 1200 mm (wide) x 800 mm (depth) x 2100 mm (height) or as a special case 600 mm(wide) x 800 mm (depth) x 2100 mm (height), RITTAL make, with 100 mm black powder coated metal base frame and with colour shedding of RAL7032 (Siemens Grey) and removable gland plates at bottom only. This applies to all types of instrument panels to be used in the whole project like various PDB, Electrical / Instrument panels, Third party device panels, etc.

 All rights reserved

d) All A/D converters of system I/O cards shall have resolution of min. 13 bits and all D/A converters of system I/O cards shall have resolution of min. 10 bits

e) There shall be 20% installed spares minimum 1, installed and wired capacity for I/O cards of each category in PLC including all peripheral termination modules, prefab cables, Relays, Safety barriers, etc

f) All marshalling and system panels shall have minimum 20 % wired spare capacity for future expansion (should be possible with the same wiring philosophy.)

g) I/O cards' Channel density shall not exceed the following limits:

Analog Input	16 Channels
Analog Output	16 Channels
Digital Input	32 Channels
Digital Output	16 Channels

h) Maintenance override switches (MOS) shall be soft type. One hardkey shall be provided in Auxiliary console for the Activation of the MOS.

Process override switches (POS) shall be soft type.

i) Auxiliary Hardwired console

Auxiliary consoles shall be provided for high priority discrete hardwired safety functions, which shall be manually operated. The console shall be installed adjacent the operator station console, near 22" TFT/LED color monitors in the control room. The console shall be equipped with, Mushroom top Emergency push buttons for emergency shut-down action only. All Emergency stop and manual start/stop push buttons shall drive an interposing relay located at IRC. For all critical electricals drives (list will be discussed separately during detailed engineering), the spare contact of final DO command from PLC going to MCC, must be connected as DI into PLC and configured in SOE for confirmation of command to MCC from PLC.

All trip parameters shall have override switches and their output status lamp on console.

j) All interlock and control transmitters shall be separate right from field junction box to marshalling panels

k) Those parameters, which are directly or indirectly tripping the plant or may cause production loss, shall be wired with 2 out of 3 transmitter trip voting interlock in PLC.

 All rights reserved

There shall be three separate analog input channels in three different cards. AI cards shall be used for this purpose in system. Same thing is applicable to Digital inputs also.

8.3. System Cabinets

8.3.1 Interlock Marshalling Cabinet

Marshalling cabinet(s) are foreseen for both incoming to Interlock system and outgoing from Inter ('from' and 'to' field) termination. The interlock marshalling cabinet(s) shall also accommodate the repeater power supplies for the field transmitters, galvanic isolators for all inputs, trip amplifiers, output relays etc.

The termination strips shall be arranged or grouped for inputs/outputs 24VDC, 115VAC, etc. both for inputs as well as outputs.

The terminals shall be of the Wago/weidmuller/Phoniex /Klippon make screwless, cage clamp type, single tier design (double tier design shall be avoided). Terminal stack for each unit shall be supplied with approx. 20% extra terminal points as spare/future provision in addition to the existing inputs and outputs.

Physical separation between the terminal stacks/points shall be maintained for the intrinsically safe and normal termination. Also the termination area shall be physically separated from the electronics area there by sealing the latter from dust ingress.

8.3.2 Sequence of event (SOE)

Bidder shall provide the Sequence of event recorder function, with a time resolution not above the machine scanning time. This information shall be available, for archiving, filtering and visualization operations to the dedicated SOE workstation, located on the consoles of Engineering room in CR, to aid in diagnosis and recognise the first cause of plant or equipment shut-down.

Sizing of the system bulk memory capacity shall be done considering for SOE activities a rate of 5000 events/day (shall be finalised during detail engineering).

8.3.3 System Clock

The PLC control system clock shall have facility for synchronising with a Main plant DCS through hardwire DI signal. Bidder shall consider Ethernet port/TCIP for synchronising to Master GPS clock. Additional hardwired or communication connections / networks between PLC control system and Main plant DCS shall be consider by the bidder.

 All rights reserved

8.3.4 DELETED

8.3.5 **Power Supply**

All instrumentation shall be fed by an Uninterruptible Power Supply (UPS) system.

An uninterrupted Supply to PLC system shall be provided to the power distribution cabinet of PLC system at 115VAC +/- 10%, 50Hz +/- 3%. UPS feeders from ACDB to PLC loads shall be redundant whereas UPS feeders for Non-Control system loads shall Non-redundant, The Contractor shall prepare a list Non-Control system UPS load requirement.

110 VAC UPS Power supply feeder failure alarm before PDB shall be provided in PLC by using double pole MCB in PDB. One contact of these MCBs shall be wired to PLC for alarm purpose. Single point Power supply shall be provided at Main Control Room / SS, all cable supply & laying, termination, any work related execution of this package shall be in bidder scope.

In case rectification to DC is involved, rectifiers shall be dual redundant and both shall be 'hot' (on line) so that failure of one rectifier will not cause a system trip. Provision shall be included in the system to annunciate the rectifier/DC power supply failure.

24V DC power supply

i) 24 VDC power supply required for interrogation voltage, solenoid valve supply, lamp, pushbutton, etc and for other packages shall be supplied by contractor using dual redundant Bulk Power Supply (BPS).

ii) Each redundant bulk power supply shall be sized for maximum50% loading of its capacity in normal time; the maximum loading is to be 70% of its capacity of BPS.

iii) All bulk power supply (BPS) shall be provided with surge protection capability. BPS shall also provide with cooling fans and with fan failure alarm indications in PLC system.

iv) Each BPS shall be provided with Mosfet based redundancy with auto-current balancing and equal loading on both PS.

v) Power supply & redundancy module shall be same make .

vi) Current output (4 to 20 mA) shall be available from the power supply unit and the same shall be wired to PLC for Power supply health monitoring and indication from all BPS.

 All rights reserved

Philosophy of power isolation and over load protection (switch fuse units) or only over load protection shall be extended upto individual card level, while designing the system, so that, minor card failures can be localised for easy rectification. Also this will avoid major down time on the system.

Earthing /Grounding bus bars for terminating shields of the cables shall be provided on the cabinet.

Power supply (For all PLC and Vendor Packages):

All BPS Failures shall be connected to PLC as a separate DI signal. All Diode O rings Failures shall be connected to PLC as a separate DI signal. All power feed Modules shall be connected to PLC as a Separate DI signal. All MCB healthiness feedback shall be connected to the PLC as a Separate DI signal. Silver/Cu/humidity/temperature monitoring shall be with 2 nos. of C/R with indication in PLC.

Healthiness of BPS/MOSFET O ring must have LED indications for indicating the healthiness of the module locally. 110 V AC and 24 V DC supplies must have current and voltage transducer wired to PLC.

8.3.6 Annunciator

The Annunciator display stations will consists of:

- LED Lamps
- Split type architecture with lamps and electronics separate
- All connections with interlock system cabinet and interlock marshalling cabinet shall be through plug in connectors.
- About 20% spare capacity shall be there
- All switches and status lights indicated below shall be an integral part of Display Modules.
- Supply shall include mounting accessories and about 20% of unassembled extra LED lamps

8.3.7 Precision & Accuracy

The isolator, repeater modules/trip amplifiers for analog inputs shall have a total accuracy of less than 0.2% of full span for the measurement circuit.

The accuracy and stability for thermocouple trip amplifiers, if applicable, shall be +/- 0.5%.

8.3.8 PLC Spare Philosophy:

 All rights reserved

Installed Spares	I/O Level	20%
	Marshalling	20%
Spare Space	I/O Level	20%
	Processor	50%
	Marshalling	20%

9. LOCAL CONTROL PANELS

All local panels under the scope of package vendor shall follow the minimum specifications listed below:

9.1. Panels shall be suitable for acidic environment. All field mounted panels shall be of FRP material only. Sealings of the panel will be Silicone/EPDM or better, which will be freezed during detailed engineering.

9.2. Panel shall be free standing close cabinets, constructed in sections of min. 1000 mm wide. The panel construction shall be welded or bolted frame construction with upright and and additional framing in modular construction. The panel front sheet thickness shall be min. 3 mm. The front of panel shall be stiffened where necessary with profiles tack welded to the rear. Top, sides and doors can be made out of 1.6 mm thick plate.

9.3. The panels shall have environmental protection conforming to IP 55 min.

9.4. Instrument air shall be provided for purging of local panels.

9.5. Panel face, sides and doors shall be sand blasted and cleaned before primer and two coats of paints are applied. The colour of paint shall be bright grey. The final surface shall be semi mat, free from blemishes and paint runs.

9.6. 115V A.C. +/- 10%, +/- 3% Hz power at one point to the local panel shall be provided by the client. Any other voltage level if required preferably 24 V, DC, the same shall be arranged by the vendor. Redundant rectifier units shall be provided for the generation of d.c.by the vendor.

9.7. Earthing lugs for both power and system earthing shall be provided by the vendor.

9.8. The wiring shall preferably contained in polymer ducts. Instrument safe wiring shall be laid separately from others. The colour of IS wiring shall be light blue.

9.9. Wago/weidmuller/Phoniex /Klippon type cage clamp type terminals shall be used for cable termination and wiring. 20% terminals shall be kept as spares in each terminal strip and box. Terminals shall be spring loaded with screws, single tier in general.

9.10. Gland plates shall be provided alongwith cable glands (ex. proof wherever required) in each panel for cable termination.

9.11. A miniature circuit breaker shall be provided for each power supply with DI contact wired to system.

9.12. All panels shall be provided with vibration dampening pads.

9.13. Each panel section shall be provided with illumination level of 300 Lux min.

9.14. Each Control panel shall be provided with set of cooling fans to maintain and protect the installed Control system.

 All rights reserved

9.15. Name plate/labels shall be provided for each panel mounted instruments, equipments and accessories mounted in the front or rear of the panel.

9.16. Purged panels shall be provided with purge fail alarm. Purge fail trip shall be provided with a bypass switch.

9.17. The local panel must have power segregation at all levels. There shall be clear segregation and isolation of power supplies for all the local panels (115 VAC /240 VAC /24 VDC).

10. PNEUMATIC TRANSMISSION

10.1. Output Signal

Output signal from all pneumatic transmitters shall be 0.2-1kg/cm2g.

10.2. Pneumatic Receiver Instruments

Pneumatic receiver instruments shall have receiver elements design for 0.2-1 kg/cm2g input signal.

10.3. Pneumatic Transmission Tubing

Pneumatic transmission tubing for local transmission shall be ½"or ¼" OD stainless steel tubing with SS316 fittings (inch).

10.4. Instrument Air

Instrument air required is available at 6.5 kg/cm2g and max. 70 degree C. However, the air pressure can be down to 4.5 kg/cm2g for remote consumers. Design pressure is 10 kg/cm2g. Dew point is -40 degree C at line pressure.

Air Distribution Headers shall be as SS 304.

11. ERECTION , INSTALLATION & COMMISSIOING

The bidder shall be responsible for the installation, calibration & testing, commissioning of the complete instrumentation and controls as defined in this specification as minimum. All the instruments & systems installed by the bidder as per scope subject to inspection, checking, calibration & testing to prove their operational fitness. Testing & calibration shall be done by the bidder, if required , all the required tools, tackles, calibration instruments, qualified skilled manpower for conducting these tests shall be provided by the bidder.

Testing & calibration may be witnessed by representative Client/PMC and/or manufacturer's representative.

LETTER WRITING : LETTER WRITING FOR ALPHA-NUMERIC TAGGING (WITH SYNTHETIC ENAMEL). :- Letter writing of different sizes on Instrument Panels/misc. Instruments/ Equipments with synthetic enamel paints (Asian/ Jonson & Nicolson/ Berger

 All rights reserved

/Nerolac Make) suitable for a temp. of 100 degree Celsius for writing of letters, figures etc. Job includes cleaning of surface on panels/instruments/misc. instruments etc. All complete with labour and materials as per drawings, specifications, Name plate schedule and directions of Engineer-in-Charge. (Supply of paints is in contractor scope).

11.1. INSTRUMENT LOCATION

11.1.1 The location of instruments, control valves. Including junction boxes shall permit easy access from grade, permanent platforms or stairways for operation, inspection and maintenance.

11.1.2 The use of portable ladder or mobile platform shall be limited to access root valves, thermowells and line mounted flowmeters.

11.1.3 Locations shall be decided to minimize the possibility of damage from passing or falling objects and the possibility of tripping hazard or obstruct on walkway.

11.2. INSTRUMENT CABLE

11.2.1 Overhead Runs

Instrument main cable tray from field junction boxes to main control building or local control room shall generally be laid in aboveground cable tray with protection cover. Tray protection cover shall be provided only for the tray on top of tray layer.

Instrument branched cable runs from junction box or local panel to each instrument in the field shall also be routed aboveground and supported with trays, steel angles and channels.

FRP perforated cable trays/cable ducts shall generally be used for main cable trays. Single pair cables from instrument to junction box and branch cable tray shall be through perforated FRP cable trays.

The scope of supply includes FRP perforated type cable trays, FRP accessories such as

Bends, tees, crosses, reducers & connector plates and accessories like bolts, nuts etc.

FRP trays shall be vinyl ester resin based and all tray shall be manufactured using the PULTRUSION process.

For Signal 900mm/ 600mm tray and for power 600mm/ 300 mm tray to be considered or shall be discussed during detail Engineering.

 All rights reserved

Cable tray segregation shall be based on the voltage level. Cable tray shall be supported at every 3M. 20% spare to be considered in the cable tray filling.

Instrumentation cables that form part of intrinsic safe (IS) circuits, if any, Shall be segregated from other instrument signal cables.

Instrument power supply (AC) cables shall not run in the same tray of instrument signal cables. Cable tray shall be dedicated for laying instrument power cables separately from the signal cable tray.

Alternatively, cable ducts of suitable size shall also be considered for main cables. When common cable ducts are used for running both power and signal cables, necessary air gap partition shall be used to segregate the cables.

11.3. CABLES

The primary insulation material shall be XLPE (cross linked polyethylene) for all types of multi pair cables as per IEC-60502/60840/IS-7098 Part-1. Inner and outer jacket shall be made of extruded flame retardant 90 deg C PVC to IS-5831

All cables shall be FRLS zero halogen as per standard IEC 332-3 Part 3 Cat. A. Fire resistance cables whenever specified shall be as per me 331 Cat. A.

The insulation grade shall be 600 V/1100 V as a minimum arid shall meet insulation resistance, voltage and spark test requirements as per BS-5308 Part-2

All cables shall be armoured. Armour over inner jacket shall be of galvanised steel wire/flat as per IS-1554 part I / IEC 502. All the cores of single pair or multi-pair shall be twisted and numbers of twist shall not be less than 10 per metre.

For signal and control cables, inner jacket colour shall be black. Outer jacket colour shall be light blue, for intrinsically safe application and black for others. For thermocouple extension cables the inner and outer jacket colour shall be as per IS-8784.

L/R ratio of adjacent cores shall not exceed 40 µH/ohm for cables with 1.5 mm2 conductor Electrical Properties of Cables shall be in line with EN50288-7:2005

Contractor shall ensure a minimum of 20% of quantity of each type of cables supplied as spare including any special cable and in each multipair cables 20% pairs shall be kept as spare.

11.3.1 Instrument Signal Cable

 All rights reserved

a) Single pair shielded signal/alarm cables shall be used between all field instruments including switches and junction boxes/local control panels.

b) Triad cable shall be used between GDs/RTDs to JB/Transmitter respectively.

b) Multipair individually and overall shielded signal/alarm cables shall be used between junction boxes/local control panels and control room.

c) The single pair/triad cables shall be 1.5 mm2 conductor size made of annealed electrolytic copper conductor of 7 strands with each strand of 0.53 mm diameter. Multipair cables with 1.5 mm2 conductor size shall have 7 strands of annealed electrolytic grade copper conductor with each strand of 0.3 mm diameter. Multi triad cable or multi pair cable with 1.5 mm2 conductor shall have 7 strand with each strand of 0.53 mm diameter. Colour of core insulation shall be black blue in pair and black, blue and brown in a triad.

d) Shield shall be aluminum backed mylar/polyester tape bonded together with the metallic side down helically applied with either side having 25% overlap and 100% coverage. The minimum shield thickness shall be 0.05 mm in case of single pair/triad and 0.075 mm in case of multipair/triad cable.

e) Drain wire shall be provided for individual pair and overall shield which shall be 0.5 mm2 multi stranded bare tinned annealed copper conductor. The drain wire shall be in continuous contact with aluminium side of the shield.

f) All multi pair cables shall have 6 pair/12 pairs only while multitriad cable shall have 6 triads/8/12 triads only. Size for multipair cable will be 1.5mm2 with drain and overlap as above.

11.3.2 Cables and Multicore Cables for Solenoids etc.

Cables and multicore cables for such items as solenoid valves and flame detectors shall normally have a conductor size of 2.5 mm2. However, conductor sizes for power cables shall be co-ordinated with the Electrical Group to avoid too many different cable types.

Signals (4-20 mA or switch 'contact): 6/12 pair individually and over all shielded (screened) and armored, twisted, 1.5 mm2 conductor.

11.3.3 Thermocouple Extension Wires

a) Single pair shielded thermocouple extension cables shall be used between thermocouple head and junction boxes transmitters/ local control panel mounted instruments.

 All rights reserved

b) Multipair individually and overall shielded thermocouple extension cables shall be used between junction boxes and main control/Rack room mounted devices.

c) The type of thermocouple extension cables shall be compatible with thermocouple used. In addition the colour coding of the primary insulation shall be as per ANSI.

d) The cable shall have 16 AWG and 18 AWG solid conductors for single and multipairs respectively.

e) All thermocouple extension cable shall be matched and calibrated in accordance with MC-96.1.

f) Shield shall be aluminium backed by mylar/polyester tape bonded together helically applied with the metallic side down with either side having 25% overlap and100 % surface. Minimum shield thickness shall be 0.05 mm for single pair and0.075 mm for multipair cable. Drain wire shall be 0.5-mm2 multi-strand bare tinned annealed copper conductor. The drain wire shall be in continuous contact with the aluminium side of the shield.

g) Inductance shall not exceed 4mH/Km.

h) All multi-pair cables shall have 6 pairs/12 pairs only.

11.3.4 Power supply Cables

All power supply cables shall be as per IS-1554 Part I and shall have copper conductors. Minimum conductor size shall be 2.5 mm2. The cables shall be PVC insulated and armoured. The higher size conductors shall be used incase of long distance power cable where voltage drops more than 3 volts than required supply.

Any other special cable required for instruments that should also be supplied as per requirements. CONTRACTOR shall ensure that these cables are armoured type and shall meet all other requirements.

11.3.5 OPTICAL FIBER CABLE

The Optical Fiber Cable (OFC) used shall conform to the following specification as a minimum:

 All rights reserved

a) The OFC shall be CSTA (corrugated steel tape armored, electrolytically chrome plated low carbon steel) armored cable.

b) The OFC shall have FRP strength member, loose tubes for single mode optical fibers filled with moisture resistant jelly, moisture barrier of polymer coated Aluminum tape or water swellable tape, inner sheath of HDPE and outer sheath of PVC.

c) Optical fibers shall be single mode fibers compliant to ITU-TG.652 and fibers colours shall correspond to IEC 793-2 and 304. Optical fibers shall be coated with UV cured double acrylic resin. It should not have any reaction with cladding or core material. The coating should provide maximum resistance to micro-bending & abrasion and ensure mechanical & optical strength. The coating shall be easily stripped with mechanical tools.

d) The number of fibers in the OFC shall be decided depending upon the requirement with 8 fibers as a minimum.

e) The cabled fiber attenuation shall be -S 0.37 dB/km for 13] 0 nm wavelength range and 0.22 dB/km for 1550 nm wavelength range.

f) The tensile performance shall be as per . IEC 60794-1-2 E1 and with tensile load of 9.81 x 2.5 W (Where W= mass of 1 km of cable in Kg)Newton Or 2670 N whichever is higher.

11.4 JUNCTION BOX

a) JB MOC shall be FRP and 4 mm thick sheet. Junction boxes shall be for IEC Zone 2 & Gas group IIA/IIB EExe. with acid resistant gasket (will be freezed during detailed engineering).

b) In all JBs, cable entries shall be from Bottom only. Further after commissioning, all JB's should be covered with Aluminum tapes at its periphery to prevent water ingress.

In general a junction box shall contain only signal of same class. The signal class is categorized as following type:

i) Signal Level

- Analog
- Digital

 All rights reserved

- T/C
- Solenoid Valve
- Instrument Power
- Gas Detectors

ii) Type of protection

- Non IS, Ex d
- IS

c) All JB extra entries shall be plugged with SS316 plug. Each junction box shall be provided with 2 multi-cable entries from the bottom of the junction box with one plugged. All Cable entry shall be at the bottom only, and not from side or top.

d) All spare cable cores shall be terminated in the Junction box, at the marshalling panel end and wired through spare barriers / isolators or relays (as the case may be) right upto the corresponding spare channel of I/O module.

e) All spares hole of JBs, T/C head etc to be plugged with metallic plugs. The metallic plugs, Junction box hinges, Handle, DIN rail, Allen screws shall be SS 316 material of construction.

f) For ease of identification shutdown JB's shall be colored should be marked with RED.

g) Cable glands shall be provided with Cables shrouds. 20% spare terminals shall be supplied in each junction box.

11.5 CABLE GLANDS

a) Contractor shall supply all cable glands required for glanding the above mentioned cables both at field instrument and local control panel side, junction boxes side and at control room side.

b) All cables glands shall be of SS316 ex-proof and they shall be double compression type suitable for armoured cables. Glands shall be in line with Area classification

c) Flame proof glands wherever required 'shall be supplied with EX'd' certification.

11.6 INSTRUMENT VALVES AND MANIFOLDS

a) Contractor shall supply instrument valves (miniature type) and valve manifolds wherever required.

b) Body rating shall be as per piping class or better. All valves and manifolds shall be forged type only.

 All rights reserved

c) Valve body and trim material shall be SS 316L unless otherwise specified. Superior trim material shall be selected as requirement by process conditions. Packing material in general shall be of PTFE

11.7 INSTRUMENT IMPULSE LINES

a) In general ½" OD annealed seamless SS 316 tubing shall be used in preference to piping.

b) Tubing standard shall be used upto 600 # only where the same is required as per job specification. For rating above 600 # and hydrogen/lethal service, only piping standard shall be used. The tubing shall be 1/2" OD tube with all fittings suitable for the same. Valves used shall be threaded. At the first isolation / root valve end suitable pipe tag to tubing conversion fittings shall be used. For remote installation suitable unions / couplings shall be used.

c) Piping standard shall be used for all installation where specified in job specification. For rating upto 600#, the connection to the transmitters shall be with a male connector and tubing 1/2" OD. For rating higher than 600 #, no tubing shall be used. The connection to the transmitters shall be with 1/2" piping with flanges in between piping standard, all pipes shall be 1/2" NB unless higher sizes required to meet the "requirements, with all fittings suitable for the piping. All the joints shall be welded or flanged as required. For instrument end connection i.e root valve of orifices and other items, level gauges vent and "drain connection, seal welding shall be provided. For non diaphragm seal instruments and instruments where provided with threaded connection, no welding is required at instrument end

d) All instruments shall be provided with isolation, drain and/ or vent valves with vent/drain end duly capped. This isolation valve shall be SS304 GATE type. It shall be in addition to the first isolation /root valve provided on the pipe or vessel at instrument take off.

f) For diaphragm seal type instruments, spacer ring with vent and drain connection along with vent / drain valve with end capped.

g) Contractor shall supply flareless compression type of tube fitting and of three piece construction with design similar to Swagelok/Parker Hannifen etc.

h) Socket-weld type forged pipe fittings of suitable material and rating shall be supplied for pipe fittings. The minimum rating shall be 3000 #. Weld neck fittings shall be used where socket weld type are not allowed by piping class.

 All rights reserved

i) All pipe fittings shall be according to piping material specification as per piping class of the pipe on which instrument is connected. In case of vessel/equipment / reactor, PMS of equivalent piping class shall be considered.

11.8 INSTRUMENT AIR SUPPLY DISTRIBUTION

Instrument air headers, pipes and distributors shall be of S.S 304. Instrument air manifold shall be used for supplying instrument air to control valves and other instruments. These shall be with 10 nos. of tappings and be with ½" NPT (F), SS 304 valves. From the nearby air manifold, instrument air shall be supplied to the control valves. For the purpose, all tubing shall be used shall be of SS316, ¼", 1/2" OD, seamless tubes, laid in perforated aluminium trays. All intermediate fittings shall be double compression, SS316 MOC, Swaglok /Parker make only.

Instrument air shall be provided at one point at battery limit. Package vendor has to develop air distribution scheme.

11.9 MCT Blocks

Cable entry to main Rack room shall be through MCT blocks.

Entry into the Panels in the Rack room shall be through bottom mounted MCT blocks.

Bidder shall provide minimum 8+8x6 MCT frame along with multi-dia blocks with peeling of arrangement and centre plug, with wedge, lubricant, stay plate. Bidder shall provide at least 20% installed spares with mult-dia blocks with peeling of arrangement and centre plug. (Qty of frame shall be submitted by the bidder during bidding stage with typical cable arrangement).

11.10 PROTECTION AND PAINTING

All exposed carbon steel parts to be painted shall be thoroughly cleaned from inside and outside to remove scale rust, dirt and other foreign materials by wire brushing / sand blasting as applicable. Minimum acceptable standard in case of power tool cleaning shall be St. 3 and in case of blast cleaning shall be SA 2. as per Swedish standard SIS 055900-1967.

- Non – ferrous materials. Austenitic stainless steels, plastic or plastic coated materials.
- Insulated surfaces of equipment and pre-painted items shall need not be painted.
- Stainless steel surfaces, both inside and outside. Shall be pickled and passivated.
- Machined and bearing surfaces shall be protected with varnish or thick coat of grease.

Depending on the environment the following primer and finish coats shall be applied:

 All rights reserved

S. No.	Environment	Description	Minimum Requirements
1	Normal – Industrial	Primer	2 coats of Red oxide
			Zinc phosphate each 30-35 microns thick
		Finish Coat	2 coats of synthetic enamel, each 25 microns (min.) thick.
2	Corrosive – Industrial	Primer	2 coats of epoxy zinc chromate, Each 35 microns (min.) thick.
		Finish Coat	2 coats of epoxy high build paint, each 100 microns (min.) thick.
3	Coastal and Marine	Primer	2 coats of high build chlorinated rubber. Zinc phosphate, each 50 microns (min.) thick.
		Finish Coat	2 coats of chlorinated rubber coat paint. Each 35 microns (min.) thick.
			(Any values refer to dry film thickness).

Colour Band shall be provided on loading arm as per Product colour code at site.

11.11 THIRD PARTY INSPECTION

Al instrumentation shall be inspected by TPIA as per approved QAP / ITP plan. General specification for Inspection & Testing is attached herewith further bidder to submit detailed QAP/ITP for each item for approval /review by Client/PMC. Client reserves the right to review / inspect / witness the items at any stage of inspection.

11.12 PACKAGING AND IDENTIFICATION

All packaging shall be done in such a manner as to reduce the volume. The equipment shall be dismantled into major components suitable for shipment. All assemblies shall be properly match marked for site erection.

Attachments, spare parts of the equipment and small items shall be packed separately in wooden cases. Each item shall be appropriately tagged with identification of main equipment. Item denomination and reference number of the respective assembly drawing.

Detailed packing list in waterproof envelope shall be inserted in the package together with equipment Each equipment shall have an identification plate giving salient equipment data, make, year of manufacture. Equipment number, name of manufacturer, etc.

12. STORAGE TANK

For each storage tank 2 Nos. of Level measurement of two different principles shall be provided (One ultrasonic/radar & one DP Type level measurement.)

13. CCTV SYSTEM

Bidder shall provide 6 (minimum) nos. of (2MP minimum) PTZ, picture IP based digital video camera with inbuilt IR to be installed at strategic location of the ZLD . Provision shall

 All rights reserved

be made in the CCTV system to connect total 16 nos. Of camera. Make of CCTV system including cameras shall be Honeywell/Hikvision/Bosch . Bidder to offer all the materials accordingly.

13.1. Closed Circuit Television system for the PLANT units shall consist of the following elements:

a) High resolution charge coupled device (CCD) day & night, tamperproof color camera

b) Auto iris zoom lens, pan and tilt, near & far focus, screen wiper, ON/OFF control equipment, color monitor and video recorder system

c) Automatic computer based switching device including Quad splitter.

d) Ceiling hung CCTV monitors such that these can be suitably matched with control room aesthetics by dimensions appearance etc.

e) Coaxial cables, control cables, optical cables, connector etc. of required type & size.

f) video recorder located in Control Room.

13.2. The complete hardware and software for PLANT shall be procured by Contractor. Contractor scope shall include:

a) Identification of suitable location for mounting cameras in the field. Contractor shall coordinate the locations, with PMC/ owner.

b) Installation of cameras and their associated accessories in the field shall be in the scope of contractor. This shall include any structure, support or stanchion required for installation and their accessories.

c) Cabling from respective camera to Rack/control room and termination of cables in the field, as per recommendations by CCTV manufacturer. This shall include any additional support or tray/tray space provision by contractor.

d) Coordinate with CCTV manufacturer/supplier during testing, pre-commissioning and commissioning of complete system.

e) Bidder to provide facility to connect FO cable from central control room CCTV network to ZLD plant network. Laying of these FO cables will be in bidders scope.

f) In order to have Server connectivity with state & CPCB portal along with CCTV cameras at effluent outlet, Emergency power supply shall be connected to the CCTV, Server and illumination for availability of power all the time. Server and its

 All rights reserved

connectivity with state & CPCB portal for online effulent parameter monitoring along with CCTV cameras at effluent outlet shall be included in vendors scope.

14. TELEPHONE EXCHANGE AND ASSOCIATED ACCESSORIES.

BASIS OF DESIGN

The system and all the equipment shall conform with all relevant and the latest edition of Indian, International, OISD and CCITT/ ITU standards using field proven microprocessor based design techniques for all processing and control functions. The exchange shall be based on a robust, reliable, virus protected, IP based platform for connecting IP phones, Digital phones as well as Analog extensions. As a minimum, the following standards shall apply.

a. IS: 2148 Flameproof enclosures for electrical apparatus.

b. IS:13346 General requirements for electrical apparatus for explosive gas atmospheres.

c. IS:5572 Classification of hazardous areas (other than mines) for electrical installation areas having flammable gases & vapours.

d. IEC:79(Applicable parts) Electrical apparatus for explosive gas atmosphere.

e. IS: 13408 Code of practice for the selection, installation & maintenance of electrical apparatus for use in potentially explosive atmospheres.

f. IS: 13408 Code of practice for the selection, installation & maintenance of electrical apparatus for use in potentially explosive atmospheres.

g. IS: 5571 Selection of equipment for Hazardous areas.

The offered exchange should be capable and equipped with requisite software / hardware for networking with different EPABX Systems of other makes for feature transparency.

The VOIP Box shall comply with the ITU-T, IEC Standards with latest amendments (if any). The system shall support fax messages via IP trunking

The telephony system shall be interconnected with the PA/GA systems such that communications can be automatically established by authorized subscribers of any of the systems without operator intervention

The telephony system shall also be connected to the Public Switched Telephone Network (PSTN) through the PABX, and shall comply with all the telecommunication carrier's requirements; technical compatibility between the public and private networks shall be ensured. Make of EPABX system including Telephone & its accessorires shall be Philips/Siemes/Tata Telecom/Neumann GMBH/Mototrla/Panasonic . Bidder to offer all the materials accordingly.

 All rights reserved

AREA CLASSIFICATION

All the out-door equipments shall be suitable for installation in hazardous area and shall be Flameproof to Ex-d IIC/T6 and weatherproof to IP67 as per IEC529, irrespective of plant's hazardous area classification,.

All the outdoor equipments shall have certification for use in Zone-1, Gas group IIC/T6, irrespective of plant's hazardous area classifications and by the recognized testing and certification authorities such as 'CMRI' Dhanbad, BASEEFA (UK), UL (USA) etc., or the relevant authorities of the country of origin.

Indigenous equipment for hazardous areas shall be approved by CCEO and all flameproof equipment shall be under a valid BIS license.

The exchange shall be fit operate on the following power supply.

a) UPS Supply voltage 115 A.C. ±10%

b) Supply frequency 50 Hz ±3%

DESIGN SPECIFICATIONS:

The system shall comprise of fully microprocessor based digital central exchange(s) consisting of system control hardware, which shall be located at Rack/ control room. It should be an expandable system. The system shall have capacity of 50 extensions .The systems exchange shall be extending up to 100 telephone lines. It should support IP / Digital / Analogue phones. A redundant interface for connecting any other Telephone Exchange.

An Internet Protocol (IP) based telephony system shall be provided. The Exchange shall have facility of connection to the LAN system with POE switches

The Telephone Exchange shall be interfaced with FGS system via 2 wire, RS-485 serial interface over MODBUS. The Telephone Exchange system shall provide general failure alarm signals for presentation on the Control system in the Control Room (CR).

The telephony system shall be interconnected with the PA/GA systems such that communications can be automatically established by authorized subscribers of any of the systems without operator intervention

The EPABX and a Main Distribution Frame (MDF) shall be located at Rack room.CPU and power supply shall be provided with 100% redundancy. Each office (or equivalent) telephone set shall dispose of two connection possibility points as a minimum. The additional connection points could be used either to change location inside the room or to add further telephone subscribers

The cable supply and installation rules shall follow the same rules than the instrumentation cables. The telephone JB supply and installation rules shall follow the same rules than the instrumentation items.The system shall have automatic broad casting of alarm when a fire or gas alarm signal is initiated from the fire and gas system. Bidder has to provide complete layout of the Telephone network in its scope of the

 All rights reserved

building. Complete supply, erection of the exchange system shall be in bidder scope. Bidder has to provide complete system in fully working condition.

The IP EPABX system must support IP TRUNK (SIP (mandatory) and should permit management of communications between SIP terminals and the traditional telephony devices (IP, analog, private or public lines). Central exchange and switches shall be provided with Redundant FO port. FO cable laying and supply will be in scope of others.

The offered exchange should be capable and equipped with requisite software / hardware for networking with different EPABX Systems of other makes via QSIG protocol (QSIG-SIP, QSIG-PRI, QSIG-Analog etc.) for feature transparency as per ECMA Standards (QSIG over ISDN & IP trunks).

The EPABX shall be suitable for up to minimum 5 digit extension numbering scheme. This numbering scheme should be flexible. System shall also allow mixed numbering scheme (open & closed numbering).

EXCHANGE

The central exchanges shall be fully digital, microprocessor based freely programmable exchanges, working independent of each other. Programming shall be by means of user friendly menu driven software via a dedicated lap top, which shall also be supplied by the system vendor. The specification of laptop shall be latest Intel hardware, Microsoft OS and MS Office software at the time of supply. it shall be possible to program / re-program the exchange through external laptop PC, using text/graphic editor, via USB/RS 232 or other suitable interface. This shall enable the user to carry out the following operations without any additional software. It shall be possible to interface the system with Fire Alarm system via RS485 serial interface over MODBUS protocol and with the central EPABX system via EPABX digital lines .The exchange shall have conference module. Complete hardware racks related to both these exchanges shall be accommodated inside Rack room at central cabinet room in a common panel/cabinet. The cabinet shall be fabricated out of minimum 16-gauge sheet steel, naturally ventilated, dust and vermin proof with IP-41 enclosure as a minimum. The panel shall be with swing out assembly of plug-in-card racks.. It shall be possible to locate faults by monitoring from the cabinet.

The central exchange shall have a processor module for the control of the central exchange. The exchange shall have a completely non-blocking type switching system and associated circuitry for call recognition and acknowledgement. The offered system shall be flexible and modular in construction with the possibility of expanding to a bigger system in the future. All hardware necessary for fault isolation and troubleshooting shall be supplied as a part of the cabinet along with each exchange.

The system shall have capacity of 50IP extensions. Bidder has to supply the following number of telephones as a minimum for all the plant area and closed buildings.

 All rights reserved

	Flameproof to Ex-d IIC/T6 and weatherproof to IP67 telephone sets with acoustic hood (wall mount),	IP Telephones with with caller id display for indoor use	Weatherproof to IP67 telephone sets with acoustic hood (wall mount),
ZLD system	4 Nos.		
Analyser shelters, if any	1 No for each		
Control Room		2 Nos.	
MCC/Sub stations		2 No for each	
Other facilities			

15. LOCAL AREA NETWORK (LAN) FOR CR

The Bidder shall lay the LAN required for Control room area.

BASIS OF DESIGN

The system shall have as a minimum the following for CR:

1. Manageable L2 switch with 1G/10G port, Jack panel and cable manager. 50% spare port shall be kept in L2 switch.
2. Switch shall have with 4 redundant Fibre optic port. One redundant Fibre Optic Port shall be used for connection to main Plant LAN switch/servers.
3. Cabling shall be CAT6A cabling. UTP CAT6A cabling shall be done with one spare cable.
4. 24 Nos 6 m/Cat6a patch cords for end user
5. Cable and passive components shall be from AMP. I/O

16. TRAINING

Supplier shall train Clients' maintenance engineers as well as operations staff in his works at Vendors Center of Excellence. The training imparted shall be by qualified and experienced staff available. It shall be exhaustive and aimed at making clients'

 All rights reserved

maintenance & operations staff self reliant for most of the day to day applications. For training, supplier shall make available as close a model of the system with all the representative nodes, as the actual system to be installed. It is envisaged that following be covered in the training:

Operating Staff Training

Operating courses include all aspects involved in operating the Control System from operator interface. This shall include operation under normal and abnormal conditions as may result from minor or major system malfunctions such that the trainee can take the appropriate remedial actions. The training shall include but not be limited to the following:

• Overview of the system

• Control philosophy

• User interfaces

• Messages and alarms

• Operator commands

• Generation of reports

• Predictable events and expected operator action

Engineering staff training

Software Design courses shall be provided which would train the Employer's Maintenance and Design staff to be able to identify and remedy software faults, upgrade and implement data and software changes, generate/develop new software for the purpose of improving the system and production of revised or new displays. The training shall include but not be limited to the following:

• Overview of the system architecture, hardware and software

• Software design and organisation

• Database structure, generation and modification

• Generation and modification of the VDU screen

• Customization of report/chart/graph format

 All rights reserved

• Assembly, compilation, linking, editing, debugging, distributing, testing and integration of program modules

17. FAT/SAT

Bidder to consider FAT/SAT for the offered system in his scope of supply. FAT/SAT procedure.

FAT – Factory Acceptance Test

FAT is inspection for verification that all equipment and devices function properly with integrity.

Prior to notification of FAT to Client/Purchaser, all the involved contractual documentation shall be completed and all the cabinets, equipment and components of Control system shall be assembled and installed in one area at one time.

Bidder shall demonstrate all the functions of the PLC working properly in FAT. Each test shall be carried out on the procedure reviewed and accepted by Client/PMC/Purchaser after submitting Manufacturing Internal Test Certificate.

FAT certificate shall be issued by bidder at the successful end of the test activities. All the hardware and software failures and problems shall be documented. All the failures and problems shall be resolved before shipment to site, All series of actions shall be taken in accordance with the FAT procedure.

FAT will start with Visual Inspection including the following activities as minimum;

- Quantity of all the cabinets, equipment and components.
- Installation of all the cabinets, equipment and components.
- Tagging of all the cabinets, equipment and components.
- Wiring of all the cabinets, equipment and components.

Once Visual Inspection has been successfully completed, Hardware Testing shall start including the following activities as minimum;

Power-On

- Redundancy of Power Supply on failure
- Diagnostics of the main equipment
- Redundancy of the main equipment on failure
- Redundancy of network on failure

 All rights reserved

- 100% I/O Accuracy Check at 5 point (0%, 50%,100%,50% and 0%) for all the hardwired points (sample check may be allowed if 100% I/O Accuracy has been checked Manufacturer Internal Test)

Once Hardware Testing has been successfully completed, Software Testing shall start including the following activities as minimum;

- I/O Database implementation
- Graphic implementation
- Control implementation
- Logic and sequence implementation
- Historian implementation
- SER implementation
- AMS implementation

SITE ACCEPTANCE TEST (SAT)

SAT is inspection for checking that all the conditions are good after installation at site.

Prior to notice of SAT to Client/Purchaser, bidder shall submit all the "As-Shipped" documentation incorporating all the FAT correction.

Prior to start SAT, all the cabinets, equipment and components of PLC shall be installed in proper location as designed.

Bidder shall demonstrate all the function of PLC working properly in SAT. Each test shall be carried out on the procedure and its criteria reviewed and accepted by Client/Purchaser.

Test certificate shall be issued by bidder at the successful end of the test activities. All the hardware and software failures and problems shall be documented.

SAT shall be identical to FAT but at reduced amount to check hardware without any damage, installations completed properly and interface working properly. bidder shall provide special tools and test equipments.

 All rights reserved

ANNEXURE-1

INSTRUMENT ACCURACIES

The instrument reference accuracies shall be as per the table below. Accuracy of the Instruments shall be minimum as follows. Custody Transfer accuracies shall be as defined in the ITB in terms of rms.

Type of Instrument	Accuracy
Process Gas Analyzer – All type	+/- 2% FS
Conductivity , pH meters	+/- 0.5 % of Reading
Belt weighers	+/- 0.5 % of range
SILICA Analyzer	+/-0.5 ppb or better
Sodium Analyzer	±5 % of reading or better
Chlorine Analyzer	± 2 % or better
Differential pressure & Pressure transmitter - SMART	± 0.050% of span within TD ratio of 1: 100 or better
Diaphragm seal transmitter & Pressure transmitter - SMART	± 0.050% of span within TD ratio of 1: 100 or better
Variable area type flow meter with transmitter	± 2.0% FS Note (1)
Vortex flow meter	± 1 % FS
Positive displacement flow meter	
- Raw material and Product	± 0.2% FS
- Others	± 0.5% FS
- Turbine meter or Mass flow meter	
- Raw material and Product	± 0.2% FS
- Others	± 0.5% FS
- Magnetic type flow meter	± 0.5% FS
- Mass flow meter (Coriolis Type)	± 0.1% FS
- Ultrasonic type flow meter	± 0.5% FS
- Ultrasonic type flow meter(5 – path)	± 0.1% FS
Orifice plate : Normal Application	+/- 2% of flow rate
Orifice plate : Special Application	+/- 1.5% of flow rate
Venturi	+/- 1 % of flow rate
- Displacement type level indicator	± 1.0% FS
- Displacement type level transmitter	± 0.2% FS (Smart)
- Tank gauge (Custody Transfer)	± 1 mm with +/- 1 mm resolution
- Servo type tank gauge	± 2 mm (up to 20 m height)
- Radar type tank gauge	± 1 mm or better for custody transfer

 All rights reserved

	± 5 mm or better for normal application
	± 0.2% of span within TD ratio of 1: 100
- Pressure gauge	± 1.0% of span for Bourdon type , 1.5% for diaphragm
- Temperature Transmitter	± 0.15 % of calibrated span for RTD & T/C
- Filled system/Bimetallic	± 1.0% FS
- Small size pressure gauge	± 3.0% FS
- Draft gauge	± 3.0% FS
- Receiver gauge	± 1.5% FS
- Thermocouple & Resistance Bulb	Applicable Codes/Standards

Note: 1. Vendor's standard accuracy is applied to local indicator type

Remarks: 1. Accuracy of instrument and special articles except for the above mentioned instrument shall be in accordance with the applicable codes/standards, or Vendor's standards as approved by Purchaser.

2. FS: Full scale.
3. Overall rangeability of transmitter except for draft range shall be 1: 100. Draft range transmitter rangeability shall be 1: 30 for the accuracy indicated above.
4. Accuracy for the instruments shall be % of reading and shall be supplied with wet calibration certification.

 All rights reserved

ANNEXURE-2

INSTRUMENT PROCESS CONNECTIONS

Field instrument connections shall be as follows.

Instrument Type	Process / Vessel Connection	Instrumentation Connections
DP Flow Instruments	½" NPT (M)	½" NPT
External Displacer on Vessel (Min. Rating ANSI 300#)	2" Flanged	2" Flanged
Internal Displacer (Min. Rating ANSI 300#)	4" Flanged	4" Flanged
External Ball Float on Vessel (Min. Rating ANSI 300#)	2" Flanged	2" Flanged
Internal Ball Float (Min. Rating ANSI 300#)	4" Flanged	4" flanged
Magnetic Level Gauge (Min. Rating ANSI 300#)	2" Flanged	2" Flanged
D/P Level	½" NPT (M)	½" NPT
D/P Level with Remote Seal Diaphragm (Min. Rating ANSI 300#)	3" Flanged	3" Flanged
D/P Level Direct Vessel Mounted (Min. Rating ANSI 300#)	3" Flanged	3" Flanged
RADAR – Direct Mount on vessel (Min. Rating ANSI 300#)	3" flanged	3" flanged
GW RADAR – Side/Side Chamber Mounted on vessel (Min. Rating ANSI 300#)	2" flanged	2" flanged
Internal GWR on Equipment (Min. Rating ANSI 300#)	4" Flanged	4" flanged
Special Level Instrument on Equipment (Capacitance/ Ultrasonic/R.F.Probe)	2" flanged	2" flanged
Tank Level Instruments (Servo) on Atmospheric tank/ Pressurized Equipment	6" flanged	6" flanged
Tank Level Instruments (Radar) on Atmospheric tank clean service / Pressurized Equipment	8" flanged	8" flanged
Tank Level Instruments (Radar) on Atmospheric tank viscous service / Pressurized Equipment	24" flanged	24" flanged
Tank Level Instruments (Capacitance/ Ultrasonic/R.F.Probe) on Atmospheric tank / Pressurized Equipment	2" flanged	2" flanged
Pressure Instruments	½" NPT (M)	½" NPT
Press.Gauge	½" NPT (M)	½" NPT
Pressure with diaphragm seal, (Min. Rating ANSI 300#)	3" Flanged	3" Flanged
Pressure Instruments on Vessel	1 ½" Flanged	½" NPT

 All rights reserved

Pressure Instruments on Standpipe	¾” SW/BW/Flanged	½” NPT
Chemical Seal pressure Instrument gauge on Vessel	1 ½” Flanged	½” NPT
Diaphragm Seal pressure Instrument gauge on Vessel	1.5" Flanged	1.5" Flanged
Thermowell (Min. Rating ANSI 300#)	1 ½” Flanged	1 ½” Flanged
Multipoint Temperature Element for Tanks	2" Flanged / 3" Flanged	2" Flanged / 3" Flanged
Standpipe	3" Flanged	-

Note:-

a. There shall be a separate tapping for each of the instruments on any pipeline/vessel. No multiple instruments from one tapping is acceptable (for example PG and PT from single pipe line tapping with single or double mechanical isolation valves are not acceptable). However, as an exception to this, three transmitters on clean gas services from one orifice (with two pairs of tapping) is acceptable, where multiple (2 out of 3, etc.) transmitters are to be installed.
b. All type of instrument tapping flange rating shall be minimum ANSI 300#, irrespective of minimum design pressure. However for pressure rating of 600# class and above, RTJ flange shall be used. At few locations, double isolation valves shall be used as per table given below.

INSTALLATION	**PRESSURE TAPPINGS**	**LEVEL TAPPINGS**	**FLOW ELEMENTS**	**CONTROL VALVE**
RATING				
300 #	SINGLE	SINGLE	SINGLE	SINGLE
600 #	DOUBLE	DOUBLE	DOUBLE	SINGLE
900 # / 1500 # / 2500 #	DOUBLE	DOUBLE	DOUBLE	SINGLE

 All rights reserved

ANNEXURE-3

SYSTEM CONFIGURATION

PLC system package

2 Nos Operator Stations with, 22" TFT, COLOR, LED type dual stacked monitors to be place in Control Room consoles

1 Nos ES/OS with SOE (dual stacked) dual personality, 22" TFT, COLOR, LED type

1 no. of Membrane Operator's Keyboard and 1 no. of QWERTY engineer's keyboards with mouse with each operator station

1 No. Annunciator with LED lamps with split type architecture

1 No Auxiliary Console

All USB ports must be blocked and the system must have latest anti-virus.

Printers

1 Nos A3 Heavy duty Colour HP make Laser printer

(All printers shall have wireless facility)

Required furniture of GODREJ make shall be considered in the offer.

All the license required for OS,ES shall be in Bidder's scope.

 All rights reserved

ANNEXURE - 4

OPERATOR STATION SUB-SYSTEM

* Model No. _Note-1___

A. **General Requirement**

1	Number of Operator Consoles	TWO
2	Inter-changeability between operator consoles	Required
3	On-line system diagnostics on Console Monitor	Required at Module level
4	On-line configuration change	Required
5	Console configuration	Single

B. **OPERATOR CONSOLE**

1	Console's basic electronics	Individual electronics for each monitor
	µp Type	64 bit
	µp Manufacturer/ model	Note-1
	Memory size /Cache size	16_GB (Vendor to check the suitability of memory size)
2	Type of Database	Functionally Separate

Database Storage Devices:

Sr. No.	ITEM MODEL No.	FUNCTION	REDUNDANCY (Refer Note)	REMARK
1.	HDD	Note-1	REQUIRED	1 TB Min
2.	Combo drive	Note-1	REQUIRED	
3.	Vendor recommended	Note-1	REQUIRED	
4.			REQUIRED	

(Note: Full Redundancy is required if Centralized global database is provided)

STORAGE DEVICES ARE APPLICABLE IN EACH OPERATOR STATION.

3 Number of Devices (per console)

 All rights reserved

S. No	TYPE OF DEVICE	Description OF DEVICES REQUIRED	NO. OF DEVICES	REMARKS
1.	MONITOR	22" TFT, COLOR, LED type dual stacked monitors (water package PLC architecture)	1 per console	
2.	KEYBOARD SETS	1 no. of Membrane Operator's Keyboard and 1 no. of QWERTY engineer's keyboards with mouse.	1 per console	
3.	ALARM & EVENT, LOG A3 PRINTER	1 Nos A3 Heavy duty Colour –HP make	1	
7.	DVD DRIVE		1 per console	
8.	ANNUNCIATOR KEYBOARD	1 No. Annunciator with LED lamps with split type architecture	1	

4 Inter-changeability between Monitors Required

5 Spare memory requirement Min. 40%

6. Keyboard Set

a) Keyboard Security against unauthorized access Required with Key-lock

Note: Key-lock Password shall be provided for each operator console.

b) Maximum number of keystrokes for accessing views as per standard display hierarchy:

S.No.	TYPE OF VIEW	REQUIRED	OFFERED	REMARKS
1.	GROUP VIEW	TWO		
2.	LOOP VIEW	THREE		
3.	LOOP IN ALARM	TWO		
4.	GRAPHICS VIEW	TWO		

c) Assignable function keys for single keystroke access Required

d) Number of Assignable function keys per Monitor 64

 All rights reserved

7 a) Number of devices for cursor control Two/Monitor

b) Devices for cursor control Keyboard **[X]** Mouse **[X]**

8 Monitors and Displays

a) Size of Monitor 22" diagonal

b) Type of Monitor TFT LED

c) Surface Treatment Hard Coating anti Glare

d) Length of tag number (characters) 16 alphanumeric

e) Length of description (characters) 24 alphanumeric

f) Display update rate 2 s

g) Dynamic graphics Required

h) Multi Window Capability Required

i) Control through dynamic graphics Required

j) Screen displays and Call-up time

S.No.	TYPE OF DISPLAY	REQUIRED	CALL-UP TIME(S)*	REMARKS
1.	OVERVIEW	YES		
2.	GROUP DISPLAY	YES		
3.	LOOP DISPLAY	YES		
4.	DYNAMIC GRAPHICS	YES		
5.	REAL-TIME TREND	YES		
6.	HISTORIC TREND	YES		
7.	ALARM SUMMARY	YES		
8.	ALARM HISTORY	YES		
9.	CONFIGURATION	YES		
10.	DIAGNOSTIC	YES		

k) Display Hierarchy

 All rights reserved

S. No.	DESCRIPTION	REQUIREMENT	SYSTEM CAPABILITY	REMARKS
1.	NO. OF OVERVIEW PAGES	AS REQD.		
2.	NO. OF GROUPS/OVERVIEW	AS REQD.		
3.	NO. OF LOOPS / GROUP	8		
4.	NO. OF GRAPHIC PAGES	AS REQD.		
5.	NO. OF POINT IN ALARM SUMMARY	AS REQD.		
6.	NO. OF POINTS IN ALARM HISTORY	AS REQD.		
7.	NO. OF TRENDS PER DISPLAYS	AS REQD.		
8.	NO. OF MULTI-TREND DISPLAYS	AS REQD.		
9.	OTHERS	AS REQD.		

l) Multi Windowing facility Required

Note: Opening of more than four windows on the same Monitor shall be restricted by the system .

m) Trending functions: Each Operator Console shall be capable of trending all analog points.

n) Real-time trend

Number of parameters Required for ALL TAGS

o) Historical trend

Number of parameters Required for ALL TAGS

Time period 30 Days

9) Logging Function

a) Number of tags to be logged Required for ALL TAGS

b) Number of log reports:

Alarm History per shift

Event logging

Hourly logs

Shiftly logs

Daily logs

Weekly logs

Shutdown report

 All rights reserved

Trip initiated log

Others (Note)

Note: Other log reports as required shall be furnished during execution stage.

c) Log formats User definable

10 System boot-up from Engineer console

11 Auto boot-up on power On Required

12 Storage disks

a) Type of storage disk HDD Optical (DVD)

b) Number of disks and capacity

Sl. No.	TYPE OF DISC	NUMBER (MINIMUM)	MEMORY CAPACITY PER DISK	REMARKS
1	HDD	One Per Monitor	AS per latest configuration	1 TB Min
2.	OPTICAL	One Per Monitor	AS per latest configuration	
3.	Other			

13 Any other feature available as a standard:

a)_____

b) _____

14 CPU Loading 60 %

15 Memory Utilization 60 %

16 Operating System Latest must have validation with the system

17 Antivirus/Network SecurityRequired

 All rights reserved

ENGINEERING Cum OPERATOR STATION SUB-SYSTEM

- Model No. _____

1. Number of Engineering cum Operator Station One

2. Number of Monitors per Engg. Station One

3 Type of electronics Individual per Monitor

µP type 64 bit

Memory size NOTE-1

Model No. NOTE-1

4 Number of engineering keyboards One per Monitor

5 Number of Operation keyboards One per Monitor

6 Functional Capability Same as operator station subsystem

7 Basic functions of Engineering Console

a) System configuration and reconfiguration

b) Group & multi-groups alarm inhibiting

c) Plant views with/ without plant operation

d) Graphic page compilation

e) Setting/ resetting real-time clock

f) Loop tuning on selectable basis

g) System maintenance and diagnostics

8 Monitor specification As per operator station subsystem

9 Keyboard specification As per operator station subsystem

10 Data storage Devices and capacity

Sr. No.	TYPE OF DISC	NUMBER (MINIMUM)	MEMORY CAPACITY PER DISK	REMARKS
1	HDD	One	As per Latest configuration	1 TB Min
2.	DVD writer	One		
3.	OPTICAL(DVD)	One	As per Latest configuration	
5.	OTHER			

11. Antivirus/Network SecurityRequired

 All rights reserved

SEQUENCE OF EVENT (SOE)

*Model No._____

Offered System Details

1 Dedicated Sequence of Event Station **Required**

SPECIFICATIONS

1	Type	Integrated with PLC system			
2	Scan time	Not more than system scan time			
3	Resolution Required				
	Digital	1 msec	[X]	10 msec	[ ]
	Analog	250 msec	[X]	100 msec	[ ]
4	SOE PC	Required			
	Function of PC:				
		Event Data Collection			
		Alarm Data collection Diagnostics			
		History Data			
	SOE Printer	Required			
	Alarm Data Storage	Required			
	Storage Time	30 Days			
5	Interfacing with:				
	PLC	Yes			

 All rights reserved

HARDWIRED CONSOLE

- Model No. ____By vendor

1. One no. of Hardwired/Aux. console:
2. Instrument Located on Hardwired consoles: (AS REQUIRED)

INSTRUMENT TYPE	NUMBER REQUIRED ON HARDWIRED CONSOLE WITH	
		CONSIDERED BY VENDOR
ASSIGNABLE RECORDERS	N.A.	
HARDWIRED ANNUNCIATORS	AS REQUIRED	
INDICATING LAMPS	AS REQUIRED	
SWITCHES	AS REQUIRED	
PUSHBUTTONS	AS REQUIRED	
OTHERS	AS REQUIRED	

3 Power supply Alarm/Annunciator 110 V AC, 50 Hz **[X]**

4 Power supply for switches, lamps, pushbuttons etc. 24 V DC **[X**

 All rights reserved

ANNEXURE-5

CABLE SIZES

Type of Signal	Inst to JB (1P,1T)		JB to CR (6P/12P/6T/8T/12T)		CR to MCC/MCC to CR (Multi-conductor cable)	
	Size *(mm2)	Type	* Size (mm2)	Type	Size (mm2)	Signal
AI	1.5	Signal	1.5	Signal	1.5	Signal
AO	1.5	Signal	1.5	Signal	1.5	Signal
DI	1.5	Signal	1.5	Signal	1.5	Signal
DO	1.5	Signal	1.5	Signal	1.5	Signal
RTD	1.5	Signal	1.5	Signal	1.5	Signal
TC	1.5	Signal	1.5	Signal	1.5	Signal
GD	1.5	Signal	1.5	Signal	-	-
SOV	2.5	Signal	2.5	Signal	-	-
POWER	2.5	Power	2.5	Power	2.5	Power
TC Extension cable	Special compensation cable between Element to transmitter					
RTD Extension cable	Triad cable between Element to transmitter of 1.5mm2					
Analysers	1.5	Signal	1.5	Signal or serial communicatio n as the case may be.		

***Note:** Above size is minimum. Further cable size may be increase based on voltage drop calculation.

 All rights reserved

GENERAL SPECIFICATION

FOR

PROGRAMMABLE LOGIC CONTOROLLER (PLC)

 All rights reserved

AC	:	Alternating Current
API	:	American Petroleum Institute
BIS	:	Bureau of Indian Standards
CCOE	:	Chief Controller of Explosives
CPU	:	Central Processing System
DC	:	Direct Current
DCS	:	Distributed Control System
DGMS	:	Director General of Mines Safety
DMR	:	Dual Modular Redundant
DVD	:	Digital Versatile Disc
EMI	:	Electromagnetic Interference
ERTL	:	Electronic Regional Testing Laboratory
ESD	:	Emergency Shutdown System
FAT	:	Factory Acceptance Test
FMEDA	:	Failure Modes, Effects and Diagnostic Analysis
HART	:	Highway Addressable Remote Transducer
HW	:	Hardware
HWC	:	Hardwired Console
I/O	:	Input / Output
IEC	:	International Electrotechnical Commission
IEEE	:	Institute of Electrical and Electronic Engineers
IS	:	Indian Standards
ISA	:	International Society of Automation
ISO	:	International Organization for Standardization
LAN	:	Local Area Network
LCD	:	Liquid Crystal Display
LCIE	:	Laboratorie Central Industries Electriques
LED	:	Light Emitting Diode
MTBF	:	Mean Time Between Failure
MTTR	:	Mean Time to Repair
OPC	:	OLE for Process Control(Open Platform Communication)
P&ID	:	Piping and Instrumentation Diagram
PC	:	Personal Computer
PESO	:	Petroleum and Explosives Safety Organisation
PID	:	Proportional, Integral and Derivative
PLC	:	Programmable Logic Controller
PTB	:	Physlkalisch Technische Bundersanstalt
QMR	:	Quadruple Modular Redundant
RFI	:	Radio Frequency Interference
SAT	:	Site Acceptance Test
SER	:	Sequence of Event Recorder
SIL	:	Safety Integrity Level
SIS	:	Safety Instrumented System
TCP / IP	:	Transmission Control Protocol /Internet Protocol
TFT	:	Thin Film Transistor
TMR	:	Triple Modular Redundant
TUV	:	Technischer Überwachungsverein
UHF	:	Ultra High Frequency
UL	:	Underwriter's Laboratories
UPS	:	Uninterrupted Power Supply
VDU	:	Video Display Unit

 All rights reserved

VHF : Very High Frequency

Triple Modular redundant (TMR), Quadruple Modular Redundant (QMR) configuration, Flexible Modular Redundant (FMR) configuration, Virtual Modular Redundant (VMR), Dual Modular Redundant (DMR)

All rights reserved

1.0 GENERAL

1.1 Scope

1.1.1 This specification, together with the Material Requisition defines the minimum functional requirements for the design, hardware, software and firmware specifications, nameplate marking, testing and shipping of Programmable Logic Controllers (PLC) designed for reliable effective and optimum control and monitoring of a process plant .

1.1.2 The related standards referred to herein and mentioned below shall be of the latest editions prior to the date of the purchaser's enquiry:

APIRP 552	Transmission Systems
EEMUA 191	Alarm System -A Guide to Design, Management and Procurement
EN 10204	Metallic Products -Types of Inspection Documents
EN 50039	Electrical Apparatus for Potentially Explosive Atmospheres: Intrinsically Safe Electrical System 'I'
IEC 60079	Electrical Apparatus for Explosive Gas Atmosphere
IEC 60529	Degree of Protection Provided by Enclosures
IEC-60584	Thermocouple Part 2: Tolerances
IEC 60617	Graphical Symbols for Diagram
IEC-60751	Industrial Platinum Resistance Thermometers and Platinum Temperature Sensors
IEC 61000-4-3	Electromagnetic Compatibility (EMC) -Testing and Measurement Techniques - Radiated, Radio Frequency, Electromagnetic Field Immunity
IEC-61000-4-4	Electromagnetic Compatibility (EMC) -Testing and Measurement Techniques - Electrical Fast Transients / Bust Immunity Test
IEC-61000-4-5	Electromagnetic Compatibility (EMC) -Testing and Measurement Techniques – Surge Immunity Test
IEC-61000-6-2	Electromagnetic Compatibility (EMC) -Generic Standards -Susceptibility - Industrial
IEC 61508	Functional Safety of Electrical/Electronic / Programmable Electronic Safety-related Systems
IEC 61131	Programmable Logic Controllers
IEC 61511	Functional Safety -Safety Instrumented Systems for the Process Industry Sector
IEEE 802.3	Telecommunication and Information Exchange between Systems -Local and Metropolitan Area Networks -Specific Requirements -Part 3: Carrier Sense

All rights reserved

	Multiple Access with Collisions Detection (CSMA / CD) Access Method and Physical Layer Specifications
IS 2148	Flameproof Enclosures of Electrical Apparatus
IS-3043	Code of Practice for Earthing
IS 13947	Specifications for Low Voltage Switchgears and Control Gears
ISA 5.1	Instrumentation Symbols and Identification
ISA 5.2	Binary Logic Diagrams for Process Operations
ISA 5.3	Graphic Symbols for Distributed Control/Shared Display Instrumentation, Logic and Computer System.
ISA 5.4	Instrument Loop Diagrams
ISA 5.5	Graphic Symbols for Process Displays
ISA 18.1	Annunciator Sequences and Specifications
ISA 71.01	Environmental Conditions for Process Management and Control Systems: Temperature and Humidity
ISA 71.04	Environmental Conditions for Process Measurement and control Systems: Airborne Contaminants
ANSI/ISA	Security Technologies for Industrial Automation and Control Systems TR 99.00.01 Manufacturing and Control System
ISO 216	Writing Paper and Certain Classes of Printer matter-Trimmed Sizes-A & B Series
ISO 9241-5	Workstation Layout and Postural Requirements
ISO 9241-7	Display Requirements with Reflections

1.1.3 In the event of any conflict between this specification, data sheets, statutory regulations, related standards, codes etc., the following order of priority shall govern:

a) Design Philosophy / Statutory regulations

b) Data Sheets

c) Standard Specifications

d) Codes and Standards

1.1.4 In addition to meeting purchaser's specifications in totality, vendor's extent of responsibility shall also include the following:

a) Purchaser's data sheets specify the minimum acceptable functional requirements for the programmable logic controllers. It shall be vendor's responsibility to select proper hardware, software and firmware to meet the specified functional

 All rights reserved

requirements.

b) Purchaser's data sheets specify the scan time / cycle time / response time and loading requirements. Vendor shall be responsible for sizing and selecting their standard product i.e. hardware, software and firmware to meet the requirements specified in the purchaser's data sheets.

c) Selection of proper and adequate hardware, software and firmware to meet system requirements specified in the purchaser's specifications, keeping the integrity of functional blocks specified in the configuration 'diagram attached with the material requisition.

d) Adequacy of Bill of Material selected to meet purchaser's requirements. Vendor to note that bill of material shall not be verified by the purchaser during evaluation stage. Any hardware, software and firmware required to meet the purchaser's specified requirements shall be provided by the vendor without any implication.

e) Providing adequate mandatory spares including consumable spares as specified in the purchaser's specifications. Vendor shall be responsible to meet mandatory spare requirements specified by the purchaser.

1.2 Bids

1.2.1 Vendor's quotation shall be strictly as per the bidding instructions to vendor attached with the material requisition. Vendor's quotation shall enumerate and include the detailed specification of each subsystem and each module of programmable logic controller, detailed system configuration, hardware and software capabilities, programming aids, display facilities and other relevant information.

1.2.2 Whenever a detailed technical offer is required, vendor's quotation shall include the following:

a) Compliance to the specifications.

b) Detailed specification sheets for each sub-system. The specification sheet shall provide information regarding hardware specifications, software specifications, redundancy requirements, capacity, power consumption etc. of the programmable logic controllers and its accessories. The material specifications and unit of measurement for various items in vendor's specification sheets shall be to the same standards as those indicated in purchaser's data sheets.

c) System security features and design details.

d) Proven references for each offered model in line with clause 1.2.4 of this specification whenever specifically indicated in the purchaser's specifications.

e) A copy of approval for flameproof enclosure, intrinsic safety etc whenever specified, from local statutory authority, as applicable, like Petroleum and Explosive Safety Organization (PESO) / Chief Controller of Explosives (CCOE), Nagpur or Director General of Mines Safety (DGMS) in India along with:

i) Test certificate from recognized house CIMFR (Central Institute of Mines & Fuel Research) / ERTL (Electronics Research and Test Laboratory) etc. for specified protection class as per relevant Indian Standard for all Indian

 All rights reserved

manufactured equipments or for equipments requiring DGMS approval.

ii) Certificate of conformity from agencies like LCIE, Baseefa, PTB, CSA, UL etc., for compliance to ATEX or other recognized standards for all equipments manufactured outside India.

f) Deviations on technical requirements shall not be entertained. In case vendor has any valid technical reason to deviate from the specified requirement, they must include a list of deviations item wise, summing up all the deviations from the purchaser's data sheets and other technical specification along with the technical reasons for each of these deviations.

g) Certificate for specified SIL requirement (e.g. SIL-3) from Independent Testing Agency.

h) Catalogues giving detailed technical specifications, model decoding details and other related information for each item / sub-system covered in the bid.

1.2.3 Vendor shall offer only their standard proven product i.e. system hardware, system software and firmware, which shall be configured to meet the functional requirements specified in the material requisition. Moreover, the equipment being offered / supplied shall be of latest proven version available in the current manufacturing range and meeting the requirements specified in clause 1.2.4 of this standard specification.

1.2.4 The system hardware, software and firmware as offered, shall be field proven and should have been completed trouble free satisfactory operation for a period of minimum 4000 hours on the bid due date in the similar application with equal or higher than the proposed system size with respect to number of inputs and outputs specified in the purchaser's data sheet. Items with prototype design or items not meeting proneness criteria specified above shall not be offered or supplied.

1.2.5 The detailed scope of work, specific job requirements, exclusions, deviations, additions etc. shall be indicated in the job specifications which shall be part of material requisition.

1.2.6 Whenever specified, vendor shall furnish tested values of failure rates, probability of failure on demand and test intervals for safety integrity level analysis.

1.2.7 All documentation submitted by the vendor including their quotation, catalogues, drawings, installation, operation and maintenance manuals shall be in English language only.

1.2.8 Vendor shall also quote for the following:

a) Two year's operational spares for each sub-system and their accessories which shall include the following as a minimum:

i) All type of electronic modules e.g. I/O modules, processor modules, communication modules, memory modules, disc controller module, power supply modules etc.

ii) All type of auxiliary items e.g. barriers / isolators, hardwired instruments, annunciator modules, receiver switches, trip amplifiers, temperature element converters etc.

 All rights reserved

iii) Switches, lamps, fuses, connectors, terminals, pre-fabricated cables, circuit breakers, relays etc.

iv) Video display units, keyboards, disc drives, PC's, network items (e.g. switches, hubs etc.) etc. \

b) Any special tools and test equipments needed for the maintenance of PLCs and other items being offered by vendor. Vendor must confirm in their offer if no special tools or test equipments are needed for maintenance other than those specifically indicated in purchaser's data sheet.

1.3 Drawing and Data

1.3.1 Detailed drawings, data, catalogues and manuals required from thy vendor are indicated by the purchaser in vendor data requirement sheets. The required number of prints and soft copies shall be dispatched to the address mentioned, adhering to the time limits indicated.

1.3.2 Final documentation consisting of design manuals, installation manual, operation and maintenance manual etc., submitted by the vendor after placement of purchase order shall include the following, as a minimum:

a) Specification sheet for each sub-system, auxiliary instrument and bought out item.

b) Certified drawings for complete system including the following:

i) GA drawings for panels, cabinets, marshalling racks, hardwired consoles, operator console, programming terminal etc with complete dimensional details, internal construction and weight in kilograms.

ii) Control room layouts e.g. console room, rack room and engineering room layout with all dimensions in millimetres.

iii) Channel base frame drawing for console room, rack room and engineering room.

iv) Input / output assignment.

v) Logic / Ladder diagrams.

vi) Loop wiring diagram.

vii) Power supply distribution diagram.

viii) Memory loading calculations/Scan time calculation.

ix) Protocol/Pin Details.

x) Dynamic graphic diagrams.

xi) System grounding drawing.

c) Design manuals and functional design specifications which shall include hardware design manual, software design manual and special software specifications.

 All rights reserved

d) Copy of type test certificates.

e) Copy of test certificates for all tests indicated in this specification.

f) Installation manual containing installation procedure for programmable logic controllers and other items covered in the material requisition.

g) Power-on, start-up and internal testing procedures.

h) Software debugging and system configuration procedures.

i) Calibration and maintenance manual containing maintenance procedures including replacement of parts, application modification etc.

j) Any other drawings and documents specifically indicated in job vendor data requirement enclosed with the material requisition.

All system manuals and documentation shall be supplied in hard dover loose ring folders in 'A4' size as per ISO 216 i.e. of size 210mm x 297mm. All drawings and sketches shall be in multiple of'A4' size like 'A3' (297mm x 420mm) or 'A2' type (420mm x 594mm) etc. but folded to 'A4' size.

2.0 DEFINITIONS

The various terms used in this specification are defined as follows:

2.1 Programmable Logic Controller

The class of control systems which can be programmed to execute plant shutdown and / or interlock / sequence logics to the specified safety integrity levels.

2.2 Accessible

A system feature that is viewable by and interactive with the operator and allows the operator to perform user permissible control action e.g. set point change, auto-manual transfers or on-off actions.

2.3 Assignable

A system feature that permits an operator to direct a signal from one device to another without the need for change in wiring, either by means of switches or via other data entry devices like keyboard commands to the system.

2.4 Configurable

The capability to select and connect standard hardware modules to create a system or the capability to change functionality or sizing of software functions by changing parameters without having to modify or regenerate software.

2.5 I/O

Input / Output with respect to process / operator

2.6 PLC Console (Operator)

 All rights reserved

PLC console (Operator) is the operator's main plant interface device through which operator can view, monitor and control the plant and can give instructions to peripherals to execute commands, and shall have protective access to configure and maintain the system.

2.7 PLC Console (Programming Terminal)

PLC console (Programming Terminal) shall be the engineer's main interface device through which engineer can configure / program and maintain the system, and shall have protective access to monitor and control the plant, give instructions to peripherals to execute commands.

2.8 Local Level

All those sub-systems;' which directly interface with field devices shall be referred to as local level.

2.9 Central Level

Operator Console and Programming Terminal, which present data acquired from local level devices shall be referred as Central Level.

2.10 Database

Database shall be defined as the information stored temporarily or permanently in the system which can be accessed by various programs to meet all its functional requirements.

2.11 Loop Integrity

A system shall be said to have loop integrity if the failure of one component in the system/ sub-system does not affect more than one loop.

2.12 System Loading

System loading for a sub-system is defined as the percentage of time a sub-system spends in carrying out various activities referred to the use of memory, CPU time and communication capacity in the worst case of high sub-system operation out of the designed / designated cycle time of the sub-system.

2.13 Redundancy

A system component shall be termed as redundant if it takes over automatically the operation in the event of the failure of the main component without causing any interruption in the system and upsetting the process. The repaired or replaced device shall be brought in-line only through operator action without upsetting system operation.

2.14 Switchover Time

Time required for a back up instrument / system to come on-line automatically in case of the failure of the main instrument / system.

2.15 Processor Cycle Time (tpc)

Processor cycle time is the measure of the processing speed of a processor. Processor cycle

 All rights reserved

time for a sub-system ofthe programmable logic controller shall be defined as follows:

Processor cycle time for programmable logic controller shall be defined as the total time taken by the processor to read input supplied by input module, execute all computations (analog as well as logic as configured) and write the outputs for the output module.

2.16 Scan Time (ts)

Scan time of a logic loops is the end-to-end response time of a sub-system and shall be defined as follows:

The scan time for a logic loop shall be defined as the total time taken by a sub-system e.g. programmable logic controller to read input from the input terminal, process input, execute logic, updating logic output and write output at the output terminal for all the logics configured within the subsystem.

2.17 User's Memory

Free memory space available after utilization of memory required for system operation, configuration and implementation of application and other system related functions for implementation of user defined specific programs such as plant calculations, process optimization or MIS (like free formatting of certain logs). The programs shall either be written in high level language or system specific language.

2.18 Event

An event shall be defined as any action taken by the operator via operator keyboard or switches on hardwired console like change of set point, change of control mode, start/stop of motor, open/close of shut down valves, alarm acknowledge etc.

2.19 Sequence of Event (SOE)

Arranging events in the sequence of their occurrence in time with a specified time resolution by a program is defined as sequence of event.

2.20 Sequence of Event Recorder (SER)

System or sub-system which presents and / or records the events in the sequence of their occurrence in time with a specified time resolution utilizing its hardware and software capabilities is termed as sequence of event recorder.

2.21 Real Time Trend

Real time trend shall be defined as a continuously progressing graphical record showing updated parameter with most recent value and a past record of minimum of 10 minutes without pressing any additional key for moving backward in time.

2.22 Plant Information Network

High-level communication network which serves various users within a plant and transfer information for the purpose of unit / plant monitoring. This network is different than control network and is generally realised using open communication protocol network e.g. OPC etc.

All rights reserved

2.23 Tag

A Tag is a collection of attributes that specify either a control loop or a process variable, or a measured input, or a calculated value, or some combination of these, and all associated control and output algorithms. Each tag is unique.

3.0 SPARES PHILOSOPHY

3.1 The system including sequence of event recorder, hardwired instruments etc. shall meet the following spare philosophy. This philosophy shall also be applicable for items like barriers, relays, terminals, lamps, push buttons etc.

3.1.1 Mandatory Spares

Vendor shall include following mandatory spares in their scope of supply:

3.1.1.1 Installed Engineering Spares

Installed engineering spares shall be provided in each sub-system for each type of module to enhance the specified" system functional requirements by 20%. The basis of offering installed engineering spares shall include:

a) For a system with conventional and / or smart analog input / output, discrete (contact) input / output, 20% spare input / output of each type shall be considered for calculating I/O modules and all other related accessories.

b) For all serial input / outputs to the system, 20% spare serial\I/O ports ofeach type of serial input / output shall be provided.

c) 20% spare accessories like relays, switches, lamps, fuses, circuit breakers, barriers, isolators, terminals etc.

d) The engineering spares shall be wired up to the field cable interface and shall be in ready-to-operate condition when field cable is connected to spare assigned terminals.

e) Spare pairs of the incoming cables shall be terminated on spare terminals in the marshalling / barrier cabinets as applicable.

f) The system shall be fully engineered considering 20% installed engineering spares including processor loading.

3.1.1.2 Spare Space Requirement

In addition to installed engineering spares specified in Clause 3.1.1.1 of this specification, the system shall be provided with following spare space:

a) I/O racks of programmable logic controller shall have 10% usable spare space for installing additional I/O cards of each type in future. However internal wiring for the same shall be connected up to the I/O terminals.

b) Processor system of programmable logic controller shall have capability to execute additional 20% logics.

 All rights reserved

c) Each operator console shall contain 20% usable spare group and related display capability in addition to as specified in para 3.1.1.1 of this specification.

d) The system shall have capability to extend its historical trending, logging and user's memory by 20% to meet future expansion with/without adding additional memory modules.

e) The communication sub-system shall have sufficient capacity to handle additional data contributed by addition of 20% I/O over and above installed engineering spares.

f) Usable spare space in panels and cabinets to install 10% spare hardwired items like relays, switches, lamps, fuses, circuit breakers, barriers, isolators, terminals, panel mounted instrument etc. in future.

3.1.1.3 Spare Memory Requirement

a) The system shall be provided with a minimum of 40% spare memory capacity, as required for application program and data base to meet specified functional requirements.

b) It shall be possible to extend the memory by at least 20% over and above the actual requirement at a later date.

3.1.1.4 Spare Software Capability

a) Sufficient additional software capacity shall be available in the system to take care of spares requirement as specified in para 3.1.1.1 and 3.1.1.2 of this specification to meet all functional requirements as per para 4.0 of this specification.

b) Unless specifically indicated otherwise, the offered system shall have software licenses to cover all the tag numbers indicated in the material requisition, including installed engineering spares and spare space indicated in clause 3.1.1.1 and 3.1.1.2 of this specification.

3.1.1.5 Predefined Mandatory Spares

a) Mandatory spares shall be ware-house spares and shall be supplied as loose items.

b) Mandatory spare module of 5% or one module of each type, whichever is higher, must be supplied for each type of modules being used excluding modules used in consoles, servers, Personal Computers.

c) For items like, Video Display Units, keyboards, disc drives, network components, hardwired instruments like barriers, lamps, fuses and circuit breakers, complete item limited to 5% or minimum one of each type shall be supplied' as predefined mandatory spare. But this shall not include hardware like hard discs, terminals.

3.1.1.6 Consumable Spares

Any paper, ribbon, printer heads, toner and ink required for printers, video copier or any other consumable item shall be supplied along with system required for minimum of six months

 All rights reserved

duration after system acceptance.

3.1.1.7 Commissioning Spares

Unless otherwise specified, vendor shall be responsible to supply all spares which are found necessary to replace failed modules, failed sub-systems, or corrupted / faulty softwares while performing pre-commissioning and commissioning activities.

3.1.2 Two Years Operational Spares

Two years operational spares shall be as per Clause 1.2.8(a) of this specification and shall be quoted separately.

4.0 DESIGN AND CONSTRUCTION

4.1 Design Requirements

4.1.1 Programmable logic controller shall be microprocessor based system which shall be used to execute all the process and safety shut-down logic of the plant. When specified, it shall also execute plant interlock logics and sequence operation. Programmable logic controller shall be an independent unit and shall not depend on any of its functionality on any other system including Distributed Control System.

4.1.2 The system shall be of modular construction and expandable in future by adding additional modules which shall be easily accessible for maintenance and repair. The type of modules shall be kept to the minimum possible in order to have interchangeability and low inventory.

4.1.3 System Availability

a) The system shall be designed 'fault avoidant' as a minimum by selecting high grade components of proven quality and proper design of system electronics.

Redundancy shall be provided, as a minimum, as per this specification to improve system availability and reliability. Due considerations shall be given to the environmental conditions particularly for field mounted sub-system, if specified in job specifications, during system design.

b) The system shall have a high MTBF value and shall have well proven record of operating in hydrocarbon plants.

c) The system shall be designed with 99.995% or greater availability. The availability shall be defined as follows:

$$\text{Availability} = \frac{\text{Mean Time Between Failure (MTBF)}}{\text{MTBF + Mean time to repair (MTTR)}}$$

For the purpose of calculations, consider mean time to repairs as four (4) hours unless the manufacturer recommends higher value for MTTR. It is therefore necessary that:

i) Vendor covers all necessary spare parts in 2 years recommended operational spares which shall be necessary to meet specified MTTR time.

 All rights reserved

ii) Vendor provides adequate training to owner's personnel and cover all necessary maintenance related topics in their training programmes to ensure specified MTTR time.

4.1.4 Operating Environmental Conditions

4.1.4.1 Environmentally Controlled Location Installation

a) All subsystem of Programmable Logic Controllers located in Control Room, Local Control Room or in Satellite Rack Room shall be able to operate satisfactorily from 15°C to 30°C and 20% to 80% non condensing humidity.

b) In addition to above, all such sub-systems shall also be able to operate satisfactorily in case of air conditioning failure with ambient temperature of 50°C and 90% no condensing humidity until the system safe operating limits are exceeded. The minimum period of continuous operation in such condition shall be 48 hours at least once in a month without any damage or degradation of system performance. Vendor, therefore, shall provide continuous temperature monitoring for each enclosed cabinet housing items / equipments generating heat, such as system cabinets, barrier cabinets, relay cabinets etc and also provide alarm for operator alert in case the safe operating temperature limits are exceeded.

c) Chemical filters have been provided in the incoming air conditioning air to limit the concentration of contaminants below following limits:

Contaminants (Corrosive Gases)	Concentration
SOx	< 0.01 ppm by volume
NOx	< 0.05 ppm by volume
H2S	< 0.003 ppm by volume
Cb	< O.OOlppm by volume
NH3	< 0.5 ppm by volume
SPM	< 200 ugm/m'
RSPM	< 100 ugm/nr'

All sub-systems and system components shall be suitable for operating continuously in the above mentioned corrosive environments

4.1.4.2 Outdoor Installations

a) Sub-systems or system components which are installed outdoor shall be suitable to continuously operate at ambient temperature and humidity specified under ambient conditions. The heat generation effect of current carrying for the electronic modules shall also be considered. For this purpose the system shall be\rated for minimum 5 deg C more than the maximum ambient temperature specified. In case the system is not suitable for the above conditions, necessary cooling arrangement shall be provided.

 All rights reserved

b) Unless otherwise specified, all PLC sub-systems or system components installed outdoor shall have corrosive environmental protection coating meeting the environmental classification class G3 as per ISA-S71.04.

4.1.5 Transient, Static and EMI / RFI Protection

4.1.5.1 The system shall be internally protected against system errors and hardware damage resulting from:

a) Electrical transients on power wiring.

b) Electrical transients on signal wiring.

c) Connecting and disconnecting devices or removing or inserting printed circuit boards in the Programmable Logic Controller (PLC).

4.1.5.2 All sub-systems and system components shall be capable of accepting various signal inputs for its direct use while preventing noise errors due to electromagnetic interference (EMI) or radio frequency interference (RFI) including nearby radio stations, hand held two way radios, solenoids, relays or contactors carrying heavy currents as per levels of Environmental electromagnetic phenomenon defined in IEC-61000-6-2. The system shall have total noise immunity from UHF / VHF radio communication equipments, (RFI) and (EMI) noise generating equipments as per IEC-61000-4.

4.1.5.3 For interplant, inter unit and other system cables routed in the field, the level of surge immunity required for equipment signal ports shall be increased to level 4 as defined in IEC-61000-4-5 and the system shall operate according to performance criterion B as defined in IEC-61000-6-2.

4.1.6 On-line Replacement

4.1.6.1 On-line replacement of any module of programmable logic controller shall be possible in such a way that removal and addition of the module shall be possible and safe without de-energising the system. Furthermore, there shall not be any interruption of the system while replacing a faulty module wherever redundant modules are provided.

4.1.6.2 Apart from system modules, power supply units shall be replaceable on-line without disrupting the process and without affecting the system redundancies. It shall be possible to hot swap any faulty system module without degrading the system safety or operation or freezing the output status. The switchover to the healthy module shall be bumpless. The swapped module shall take over the function of the failed module without any manual programming.

4.1.7 Electrical Isolation

Galvanic or optical isolation shall be provided for all field signals. The isolation levels shall be as follows:

Analog I/O channel to system ground 1500V AC

Discrete I/O channel to system ground 500V AC

External isolator shall be provided, if necessary to meet the above.

 All rights reserved

Isolation shall also be provided between Engineering / operator cbnsole/PLC programming terminal and related sub-systems connected to it if there is any possibility of high voltage being transmitted to the sub-systems.

4.1.8 Design Requirements of Equipments in Hazardous Area

4.1.8.1 Unless specifically indicated, the field devices are beyond the scope of this specification. However vendor shall be fully responsible for integrating these devices with their system.

4.1.8.2 General requirements

a) Unless otherwise specified, all instruments in hazardous area shall be intrinsically safe type. Other concepts shall be used when specified.

b) For conventional instrumentation, entity concept shall be used for selecting proper barriers / isolators.

4.1.9 Repeat Signals

4.1.9.1 Unless otherwise specified in the job specifications, following philosophy shall be followed for repeat signals:

a) Whenever repeat contact outputs are required as per job specifications following philosophy shall be followed:

i) For intrinsically safe input contacts, isolating barrier with dual contact output shall be utilized.

ii) For all other contact inputs, repeat contact shall be provided using electro-magnetic relays.

4.1.10 The system shall be designed fault tolerant and shall utilize high quality components of proven quality. Any single system fault shall not degrade the system safety or functionality or affect operation. The system shall have certified Safety Integrity Level as per IEC61508/ 61511 as applicable and specified in job specification. Unless otherwise specified, it shall meet the availability requirement specified in Clause 4.1.3 ofthis specification.

4.1.11 Scan time for a PLC shall be 250 milli sec.

4.1.12 Operation of the PLC shall be completely unaffected by a momentary power loss of the order of 20 milliseconds.

4.1.13 The system shall be programmed in principle as per the logic diagrams furnished during detailed engineering. Vendor shall prepare their own Logic/Ladder diagrams depending upon the capability of the programmable logic controller offered by them. Owner / Consultant reserve the right to revise or review the logic diagrams even after acceptance of any offer. The programming language of offered PLC shall be as per IEC 61131.

4.1.14 Whenever the requirement of SIL is specified for the PLC, it shall meet the requirements of SIL level specified and shall be certified by an independent body (e.g. TUV) for complying requirements of IEC-61508 / 61511 as specified.

4.1.15 The system shall have extensive set of self diagnostics hardware and software for easy and

 All rights reserved

fast maintenance of PLC. Routine checks should run automatically at frequent intervals for identifying any fault in software or hardware. Diagnostics shall be required at local as well as console level. \

4.1.16 Safety barriers shall be provided by the vendor for intrinsically safe input/output circuits wherever specified. In such cases, the system shall be designed intrinsically safe based on entity concept. The barriers shall be certified by a statutory authority like Baseefa, LCIE, CSA, UL, PTB, CIMFR etc., for the use in the area classification as specified elsewhere in the job specifications. The proper selection of the safety barriers shall be the vendor's total responsibility. In case of smart transmitter, the entity parameters of the hand held terminals shall also be considered while selecting proper barriers.

4.1.17 Unless otherwise specified all intrinsically safe barriers shall be 3 port isolating type only providing isolation between;

i) Input and output (non-hazardous to hazardous side of barriers)

ii) Power supply and input

iii) Power supply and output

The minimum isolation level shall be 250V.

4.2 System Configuration

4.2.1 General

a) PLC system configuration / architecture shall be as specified in the job specification.

b) Regardless of the action feature selected (except for single architecture), the failure of single component shall not result in a failure of correctly executed safety function. The degradation mode for the selected configuration e.g. 4-2-0 or 3-2-0 or 3-2-1-0, etc. shall be documented in SIL certification report.

c) In general, the PLC system shall comprise of various sub-systems as described in the subsequent clauses of 4.2.

4.2.2 Input/ Output Subsystem

4.2.2.1 Each I/O module shall have its own processor. I/O modules configured m redundant configuration, shall have their processors properly synchronised.

4.2.2.2 Unless otherwise specified, system shall accept analog 4 -20mA inputs and contact inputs. The maximum number of Input/Output per I/O module shall be limited as per the following table.

Sl No.	Type of Configuration	Maximum No. I/O s
1	Single I/O system	8
2	Dual I/O system	16

FORM NO: 02-0000-0021F2 REV3 All rights reserved

3	Triple Modular Redundant system (TMR)	32
4	Quadruple Modular redundant System (QMR), Flexible Modular Redundant (FMR) configuration, Virtual Modular Redundant (VMR)	16

4.2.2.3 Each I/O shall be galvanically isolated from external control circuit by suitable means. The minimum isolation level between I/O and logic circuit shall be 1000 volts DC.

4.2.2.4 Each I/O shall be protected against the reversal of polarity of the power voltage to I/O.

4.2.2.5 Each input shall be provided with filters to filter out any noise in the input line and contact bouncing noise, as applicable.

2.2.2.6 All the inputs / outputs shall be double ended i.e. two wires per input / output and not with common return for all inputs.

4.2.2.7 The interrogation voltage to the inputs and power supply for 2-wire instruments shall be powered from separate redundant power supply / supplies and shall not be a part of PLC, unless otherwise specified. This power supply shall be supplied at one point and shall be distributed by the vendor.

4.2.2.8

a) Each module shall have a LED per channel to indicate the status of each input output.

b) When specified, input module shall be capable of monitoring the input contacts for any wire open fault and short circuit.

4.2.2.9 Analog Input Module

a) Input module shall be able to accept 4~20 rnA DC input from smart transmitters (e.g. 4 -20mA HART).

b) The module shall have 12 bit Analog to Digital resolution accuracy of ±0.2S% of full scale over the entire range, unless otherwise specified.

4.2.2.10

a) Output contacts from the PLC shall be potential free dry contacts with contact rating as per para 4.2.2.10 b) of this specification. Vendor must provide arc suppression device for each output contact.

b) The output contact rating shall be as follows:

SL.No.	APPLICABLE FOR	VOLTAGE RATING	CURRENT RATING
1	All output cards driving solenoid valve		

 All rights reserved

	and alarm annunciator system unless otherwise specified Category -I Category -II	**110 V DC** **24VDC**	0.5 A 2A
2	All motors/pumps/compressor output cards unless otherwise specified. Category –I Category -II	**240 V AC** **220 V DC**	5.0A 0.2 A

c) The category of contacts shall be specified in the material requisition. Each output shall be short circuit proof and protected by fuse. Visual indication of fuse blown must be provided for each module.

d) When specified contact output module shall have monitored\ output features like wire open and short circuit.

4.2.2.11 Where inputs or outputs have multiple field devices for the same measurement or device, the corresponding inputs / outputs shall be configured in separate I/O modules.

4.2.2.12 Where single input signal is available for DMR configuration, inputs shall be multiplied to feed inputs to each input modules / channels.

4.2.2.13 PLC shall be provided with Auto I/O testing facility as a standard diagnostics features. PLCs which do not have auto I/O testing facility, manual testing facility shall be provided to detect any system fault. For manual testing, manual switches shall be provided to bypass each input at a time and its effect on the output shall be monitored.

4.2.3 Processor System

4.2.3.1 The processor shall have capability to implement all the control functions required to implement the logic scheme as logic/ladder diagram.

4.2.3.2 The size of the memory shall be sufficient for storage of the program instructions required by the logic schemes and other functional requirements. Offer shall indicate the amount of memory capacity occupied by the actual program and spare capacity available for future program modifications or additions.

4.2.3.3 Memory shall be non-volatile. However in case volatile memory is provided, battery backup shall be provided with a minimum of 3 months lifetime to keep the program storage intact. A battery drain indication shall be provided at least one week before the battery gets drained.

4.2.3.4 Watchdog timer shall be a software device. The healthiness of processors shall be continuously monitored by watchdog timer. Any hardware or software problem in the processor system, which shall include, CPU, memory, power supply, communication interface etc. shall cause the watch dog timer to report processor failure.

4.2.3.5 Wherever dual redundant processor is specified, redundancy shall be provided in such a way that in case of failure of the main processor, the standby shall take over automatically. The changeover shall be bump less. Redundancy shall be provided for complete processor system including processor, power supply and communication sub system.

4.2.3.6 In case of triple modular redundant system all the three processors shall execute the same instructions/program and check their results and vote to correct any faulty result. The faulty

 All rights reserved

processor diagnostic shall be made available.

4.2.3.7 In case of QMR system, individual processor shall execute the same instructions/ programs and check their results within same CPU module and majority vote to correct any faulty result. The faulty processor diagnostic shall be made available.

4.2.3.8 Failure of a single processor in dual redundant, triple redundant system and two processors in QMR system shall not affect the system. In case of failure of complete processor system

i.e. both processors in case of dual configuration, two or more in case of triple redundant system and more thah two in case of QMR system, outputs shall take failsafe state automatically unless otherwise specified in the data sheets.

4.2.3.10 It shall be possible to generate the first out alarm contact by the PLC in case where a group of parameters are likely to trip a system.

4.2.4 PLC Console (Programming Terminal)

4.2.4.10 The PLC console (Programming Terminal) shall be used for programming, program storing, fault diagnostics and alarm monitoring. Whenever specified, it shall also be possible to use this console for plant operation. The functionality to operate as engineering / programming terminal or operator terminal or both shall be as specified in the job specification.

4.2.4.2 It shall consist of at least one coloured 22" LED monitor with TFT technology and one programming / operating keyboard, mouse and printer unless specified otherwise.

4.2.4.3 PLC console when used for plant operation shall also meet the functional requirements as per clause 4.2.5 of this specification

4.2.4.4 The keyboard shall preferably be touch sensitive sealed type, easy to operate with each key clearly identified.

4.2.4.5 All illegal entries shall be rejected by the terminal and shall be identified by warning signal on VDU.

4.2.4.6 Manual forcing of any input or output contact connected to PLC shall be possible from keyboard. Forced functions shall have an associated audit trail.

4.2.4.7 It shall be possible to modify, add or delete the application program on line without affecting the outputs.

4.2.4.8 PLC Console shall display logic and/or ladder diagram indicating power flow and shall show description and status of each contact. It shall also be possible to display process alarms and diagnostic messages as and when they appear. Further it shall also be able to display I/O map in a user defined format.

4.2.4.9 I t shall be possible to print out the ladder/logic diagram on the dedicated PLC printer. The printer in addition shall also print out:

a) The diagnostic messages as and when generated and diagnostic reports, when called for.

b) Process alarms connected to the programmable logic controller as and when they

 All rights reserved

appear and alarm report whenever initiated. The choice of printing alarms on this printer shall be operator selectable from a key lock / password protected switch on PLC console.

c) The I/O maps showing status of all inputs and corresponding outputs in a user defined format.

4.2.4.10 The PLC console shall be provided with self diagnostics feature which shall display error messages and initiate an audible alarm if the fault is detected. Wherever specified, a potential free contact for diagnostic group alarm shall be provided which shall be connected to the hardwired alarm 'annunciator system.

4.2.4.11 The system shall be able to identify the failure at least up to the module level including I/O system and redundant processor and report print out.

4.2.5 PLC Console (Operator)

4.2.5.1 Where dedicated PLC operator console is specified, it shall be used for operation of plant, fault diagnostics, alarm monitoring and report generation.

4.2.5.2 It shall consist of colored 22" LED monitor with TFT technology, operator keyboard and printer unless specified otherwise.

4.2.5.3 At least two number cursor control devices shall be provided in addition to keyboard which may include touch screen, mouse, track ball etc.

4.2.5.4 PLC operator console shall have complete graphic capability and shall be able to display process dynamic graphics, overview and group view displays. It shall be possible to operate the plant i.e. start and stop of rotating machinery, opening and closing of valves, Pill function etc. from dynamic graphics and group displays available on PLC operator console.

4.2.5.5 It shall be possible to monitor, historise and print out all process alarms, diagnostic alarms and alarm reports.

4.2.5.6 Unless otherwise specified, the time stamping of all alarms shall be as per PLC processor time stamping.

4.2.5.7 The system shall be able to store and display stored data wherever required. The minimum storage capacity shall be for 30 days at 1 minute sample rate for all the inputs specified, diagnostic alarms, process and first out alarms, manipulation data etc.

4.2.5.8 The system shall be able to generate shiftly, hourly, daily, weekly and monthly reports. The log format shall be furnished during detailed engineering.

4.2.5.9 The system shall be supplied with first out alarm generation capability. The resolution of alarm shall be as per processor cycle time, as a minimum.

4.2.6 Communication Subsystem

4.2.6.1 The PLC communication subsystem shall be a digital communication bus that provides a high speed data transfer rapidly and reliably between the processor, I/O sub-system, PLC console and other devices connected in the PLC system.

All rights reserved

4.2.6.2 Redundancy in PLC communication subsystem shall be provided as follows unless otherwise specified:

a) For single architecture, the communication subsystem between PLC processor and I/O subsystem shall be single unless otherwise specified. This shall include single communication bus and single interfaces/buffers.

b) For dual I/O configuration, each I/O sub set shall have separate communication interface and bus for connecting to PLC processors.

c) For the triple redundant system, each processor shall have a separate set of PLC communication subsystem.

d) For the QMR systems each I/O subset shall have separate communication interface and bus for connecting to respective CPU module.

e) The communication subsystem between processor subsystem and PLC console shall be dual redundant, consisting of two separate communication interfaces and two buses, each one configured in redundant mode, unless this is only used as programming aid.

4.2.6.3 In case of redundant PLC communication sub system, on the failure of the active device, the redundant device shall take over automatically without interrupting the system operation. Information about the failed device shall be displayed at local as well as on PLC console. It shall be possible to manually switch over the communication from main bus / device to redundant bus / device without interrupting any system function.

4.2.6.4 The mechanism used by the system for error checks and control shall be transparent to the application information / program. Error checking shall be done on all data transfers by suitable codes.

4.2.6.5 In general, PLC shall provide data m a well established protocol format preferably MODBUS protocol.

4.2.7 System Power Supplies

4.2.7.1 Unless specified otherwise, the programmable logic controller shall operate on uninterrupted power supply (UPS). However the system shall be capable of operating satisfactorily at the following power supply specifications:

Voltage	220 V ±10%
Frequency	50 Hz±3 Hz
Harmonic contents less than	5%
Power interruption	10 millisec

4.2.7.2 The power supply system shall be supplied with dual PLC feeders each capable of handling 100% of the total power supply load requirements. In case of failure of one feeder, redundant feeder shall supply the total load.

4.2.7.3 Each I/O rack shall be provided with separate power supply unless otherwise specified in job

 All rights reserved

specifications. Each power supply shall be sized to take full load of the I/O rack/signal conditioning panel. Each rack shall be provided with dual redundant power supply.

4.2.7.4 Processor subsystem shall be provided with separate power supply, as a minimum, unless otherwise specified in job specification. Failure of one power supply shall not affect the system operation/processor switchover in case of dual processor system. Wherever triple redundant system is specified each processor shall preferably be provided with a separate power supply. Also separate power supply must be provided for each multiplied process I/O channel.

4.2.8 Self Diagnostics

4.2.8.1 The system shall have an extensive set of self diagnostic routines which shall be able to identify all permanent and transient system faults / failures at least up to module level including redundant components and power supplies through detailed VDU displays and report print out.

4.2.8.2 At the local level, failure of a module in any subsystem shall be identified by an individual LED.

4.2.8.3 Diagnostic software shall have the capability to provide information about the failed module/system either in the form of a system configuration display or provide information in the form of a "statement".

4.2.8.4 Self diagnostic software shall have capability to detect faults which make the system permanently close/open in the I/O modules or I/O signal conditioning modules (in case of triple redundant system, whenever specified in the job specifications, this may be achieved by automatically running the testing software at cyclic intervals), The automatic cyclic testing feature shall also be provided for dual I/O configuration and dual I/O signal conditioning for triple redundant system. The testing software cycle time may be considered once in 30 minutes however this shall be field adjustable by engineer. However, system performance shall not be degraded whenever testing feature is specified.

4.2.8.5 System for the following functionalities shall be supplied when specified:

a) Long storage historisation

b) Log report generation

c) First out alarm generation

4.2.8.6 System diagnostics shall be capable of identifying, locating and reporting the following faults, as a minimum:

a) Processor fault

b) Communication fault

c) I/O module fault

d) Power supply fault

e) Over temperature monitoring

 All rights reserved

f) Permanently close / open (stuck on or off) fault

g) Memory fault

h) Signal redundancy fault

Any other additional diagnostic alarm if available as a standard shall also be provided by vendor.

4.2.8.7 Testing software shall be capable of detecting faults in case of normally closed system as well as in normally open system.

4.2.8.8 Feedback must be provided in case of triple redundant system and QMR system from the output voter system to detect any latest faults of the system in addition to other diagnostic software.

4.2.9 System Software

4.2.9.1 The system software shall include all programs for the PLC and PLC console which are required to perform all the PLC functions including communication and self-diagnostics. Whenever PLC is specified for shutdown application with SIL classification, the system shall be designed and engineered in full compliance with the requirement of IEC-61511. Whenever different functional logics are combined within a common PLC, the safety related I/O's of each functionality shall be kept segregated within the system.

4.2.9.2 Logic program shall also be recorded on the external most reliable electronic media like DVD which shall be delivered in triplicate together with the system.

4.2.9.3 The PLC programming language for implementation of logic operations shall be based on the following representations:

a) Logic diagrams -Binary logic symbols such as AND, OR, NOT Gates, Timers and Flip-Flops.

b) Ladder diagram -Series / parallel connection of relay contacts.

c) Combination of (a) & (b) above.

4.2.9.4 Diagnostic package and its related equipment and software shall be supplied. A list of additional diagnostic packages available and the packages provided, including the description and capabilities, shall be provided with separate quote, wherever asked.

4.2.9.5 It shall be possible to print out the ladder/logic diagram on a dedicated printer. The printer shall also print out all diagnostic reports. Vendor must supply the off line software package to enable the owner to modify/add/delete any part of program and for documentation.

4.2.9.6 Software for the generation of various displays including dynamic graphics wherever specified to be provided as per given below:

4.2.9.6.1 It shall be possible to display dynamic graphic of plant on the operator console VDU screens. Graphic displays shall be field configurable only through PLC Console (Programming terminal) with standard / user defined graphic symbols. Dynamic graphic displays of different sections of the plant shall be displayed on different pages.

 All rights reserved

4.2.9.6.2 The system shall have graphic symbol library as per ISA-5.! and 5.3. In addition standard industrial symbols like distillation columns, heat exchangers, pumps, compressors, tanks etc. shall also provided as a standard.

4.2.9.6.3 Graphic displays shall be interactive type through which it shall be possible to control the process. It shall also be possible to send motor start/stop and shutdown valve open/close commands, as specified in job specifications, from this display

4.2.9.6.4 It shall be possible to view the process variable and alarm points and view and change set point value, manipulated variable, controller mode etc. from the graphic display. Also rotating machinery (i.e. compressor / pump) status and valve status shall be displayed on the graphic display with different colours

4.2.9.6.5 Various colours used in the generation of graphics like colour of the process lines, utility lines, Instrument signal lines and event modifier conditions shall be finalised during detailed engineering. The colours used to identify event modified conditions shall generally be as follows unless otherwise indicated during detailed engineering

Red -	All points alarm
Green-	Valve open, pump running
Red -	Valve closed, pump stopped
Flashing yellow -	Shut down valve transition state
Blue -	Indication of tripped equipment condition.

4.2.9.6.6 It shall be possible to go from any graphic page to related graphic pages or any group view or alarm summary in single key stroke using soft key function.

4.2.9.7 The software for printing alarms, system as well as process, and events on the PLC printer must be provided. All alarms must be printed as and when they appear.

4.2.9.8 Software package for displaying I/O map showing status of inputs and corresponding output providing tag numbers as per logic diagram shall be offered. The I/O map format shall be user definable.

4.2.10 Power Supply Distribution

4.2.10.1 All type of power supplies shall be made available at one point. Further distribution of power supply shall be in vendor's scope.

4.2.10.2 In general, all output contacts and solenoids shall be powered with 1l0V±10% DC/ 24V±10% DC power supply. However, the actual interrogation voltages shall be as per job specifications and logic diagrams.

4.2.10.3 The distribution network for interrogation voltage shall be designed such that a single fault in any branch shall not cause trip of the logic other than where the fault has occurred.

4.2.10.4 Sequential starting of various load centers shall be provided whenever specified.

 All rights reserved

4.2.10.5 Power distribution network must use bus bars of adequate capacity with DPDT (Double Pole Double Throw) switches and HRC (High Rupture Capacity) fuses in each branch network. Vendor may select circuit breaker if short circuit characteristics do not match the HRC fuse.

4.2.10.6 All cubicles lighting shall be on 240 V, 50 Hz AC normal power supply.

4.2.11 PLC System Cabinets

4.2.11.1 All PLC system cabinets shall be completely wired with all modules in place. Inside cabinet wiring shall preferably be done using ribbon type pre-fabricated cables.

4.2.11.2 All the cabinets shall be free standing, enclosed type and shall be designed for bottom entry of cables. Cabinet structure shall be sound and rigid. Cabinet shall be provided with removable lifting lugs to permit lifting of the cabinets.

4.2.11.3 Cabinet shall be fabricated from cold rolled steel sheet of minimum 2 mm thickness suitably reinforced to prevent warping and buckling. Doors shall be fabricated from cold rolled steel sheet of minimum 1.6 mm thickness. Cabinets shall be thoroughly deburred and all sharp edges shall be grounded smooth after fabrication.

4.2.11.4 Cabinet finish shall include sand blasting, grinding, chemical cleaning, surface finishing by suitable filter and two coats of high grade lacquer with wet sanding between two coats. Two coats of paint in the cabinet colour shall be given for non-glossy high satin finish. Colour of the cabinets shall be as per job specification. Final coat shall be given after assembly at site when specified in the job specifications.

4.2.11.5 Each cabinet shall be maximum 2100 mm high (excluding 100 mm channel base), 800 mm wide and 800 mm deep, in general. Construction shall be modular preferably to accommodate 19" standard electrical racks. All cabinets shall be of same height.

4.2.11.6 Cabinets shall be equipped with front and rear access doors. Doors shall be equipped with lockable handles and concealed hinges with pull pins for easy door removal.

4.2.11.7 In order to effectively remove dissipated heat from the cabinets, ventilation fans along with vent louvers backed by wire fly screen shall be provided as required. Ventilation fans shall be provided in all cabinets where the temperature rise with all doors closed and all internal and external loads ertergised shall exceed 10° C above the ambient temperature. A temperature element (resistance temperature detector) shall be provided in each cubicle for temperature measurement. Ventilation fans shall be provided in dual configuration, as a mmimum.

Each fan shall have a separate dedicated assembly and shall be replaceable on-line without shutting down any equipment / panel/cabinet / console in part or in complete. \

Ventilation fan assembly shall operate at 240V AC power supply. Each fan shall have its own dedicated circuit breaker.

Each ventilation fan shall be fitted with a protection type finger guard. Whenever, the numbers of cabinets are compacted (supplied in mechanical joined conditions), each cabinet shall be provided with separate ventilation fan assembly.

The maximum noise level with all fans operating and cubicle doors open shall not exceed 85dBA.

All rights reserved

Following signals and alarms shall be provided for each cabinet:

i) Fan failure alarm for each cubicle in PLC.

ii) Temperature indication of each cabinet or compacted combination, as applicable in PLC.

iii) A common alarm each for high temperature and fan-failure shall be made available.

4.2.11.8 Internal illumination shall be provided for cabinets to ensure proper illumination level of250 lux for performing maintenance activities. Illumination shall be provided for all cabinets by incandescent lamps, which shall be activated individually by door operated magnetic switches. The lamps shall activate when door is opened and deactivate when the door is closed. The magnetic switches selected shall have undergone life cycle cyclic test of at least 1000000 operations. A manual over-ride switch shall be provided inside the cabinet which shall keep the lamp deactivated even when the door is open.

4.2.11.9 Equipment within the cabinet shall be laid out in an accessible and logically segregated manner. Cable glands shall be provided and supplied by vendor for incoming and outgoing cables to prevent excessive stress on the individual terminals. All metal parts of the cabinet shall be electrically continuous and shall be provided with a common grounding lug.

4.2.12 Control Panels/ Hardwired Console

4.2.12.1 Control panels, if required, shall be non-graphic self supporting, free standing cubicle with back doors made up of sectional steel panels. Each section shall be maximum 2100 mm high, 1200 mm wide and 1000 mm deep and shall be mounted on 100 mm high channel base. Care shall be taken to ensure that the face of the panel is truly flat and smooth.

4.2.12.2 Panels / hardwired console shall be fabricated from 3.0 mm thick cold rolled steel sheet. Angle iron frame shall use a minimum section of 50x50x4mm angle.

4.2.12.3 Front of panel/console instrument nameplates shall be black laminated plastic with white core. Nameplate shall be provided on the rear of the panel also for each instrument.

4.2.12.4 Document pocket / wallet shall be provided on the inner side of front and rear doors of each cabinet and on the inner side of the door of each panel. Similar arrangement shall also be made on the inner side of doors of console.

4.2.13 Wiring Requirements'!

4.2.13.1 All wiring shall conform to API RP 552-Transmission Systems. Different signal level cables shall be routed with separation distances as recommended by this code.

4.2.13.2 All wiring inside racks, cabinets, and back of the panels shall be housed in covered, non-flammable plastic raceways arranged to permit easy assembly to various instruments for maintenance, adjustments, repair and removal. \

4.2.13.3 All wiring in the raceways shall be properly clamped. All incoming cable and outgoing cables shall be terminated by vendor at marshalling rack. Total wiring cross-sectional area shall not exceed 50% of the raceway cross sectional area.

 All rights reserved

4.2.13.4 Separate wiring raceways shall be used for power supply wiring, DC and low level signal wiring, and intrinsically safe wifing. Parallel runs of AC and DC wiring closer than 300mm shall be avoided.

4.2.13.5 Vendor can alternately offer prefabricated cables for interconnection between different cabinets and panels.

4.2.13.6 Wire termination shall be done using self insulating crimping lugs. More than two wires shall not be terminated on one side of single terminal. The use of shorting links for looping shall be avoided.

4.2.13.7 Terminal housing shall be strictly sized with considerations for accessibility and maintenance. Minimum distance required between various components is listed below. These distances are clear distances and are excluding the width of the raceways or any other component / item mentioned herein. Following clearances should be considered:

a) Distance between terminal strip and side of the cabinet parallel to the strip, up to 50 terminals, shall be minimum 50 mm.

b) Distance between terminal strip and, top and bottom of the cabinet shall be minimum 75mm.

c) Distance between two adjacent terminal strips shall be minimum 100 mm.

d) Additional distance for each additional 25 terminals shall be minimum 25 mm.

e) Distance between cable gland plate and the bottom of the strip shall be minimum 300 mm.

4.2.13.8 All terminal/terminal blocks shall be DIN Rail mounted type and shall be easily removable. The size of the terminal blocks / terminals of different types shall be consistent and identical. All terminal blocks shall be mounted on suitable anodised metallic or plastic stand-off.

4.2.13.9 No splicing is allowed in between wire/ cable straight run.

4.2.13.10 Terminal strips shall be arranged group-wise for incoming and outgoing cables separately. Terminal blocks for intrinsically safe wiring shall be separate. 20% spare terminals shall be provided, as a minimum, preferably in each terminal strip. Terminals shall be suitable for wires up to 2.5 sq. mm base solid or stranded conductor in general. For power cables, higher size terminals shall be used.

4.2.13.11 Cabinet and rack layout shall be made considering proper accessibility and maintenance.

4.3 Earthing

4.3.1 All system equipments such as panels, marshalling cabinets, system cabinets and other powered equipments shall be provided with following type grounding system:

a) Protective Earth/ Electrical Earth

b) System Earth! Signal Earth

c) Safety Earth! Barrier Earth (when required)

 All rights reserved

Both system earth and safety earth shall be totally separate from protective earth.

4.3.2 Protective Earth / Electrical Earth

a) Each metallic enclosure / cabinet / panel/console etc. shall be provided with electrical earth lug, as a minimum.

b) Unless recommended otherwise by vendor, all earthing lugs of metallic equipments indicated in Clause 4.3.2 (a) above shall be connected individually to electrical protective earthing system bus-bar / earthing station using ,a maximum of 10sq mm solid copper conductor PVC insulated wires.

c) Where multiple cabinets are multiplexed together, earth looping with permanent shorting link cables shall be acceptable. Two earthing connection wires as indicated in Clause NoA.3.2 (b) above shall be used for connecting multiplexed cabinets to protective earth station / bus-bar.

4.3.3 System Earth

a) System earth shall be totally noise free dedicated earthing system and shall be fully isolated from electrical protective earth. This earth must be very high integrity system and shall be used to ground zero volt references and signal cable grounds.

b) System earth shall be less than one (l) ohm grounding system with its own dedicated earthing pits. These earth pits shall be away from any heavy noise plant equipment. Outside the control room building is the most appropriate location.

c) Wherever supply of earth pit is kept in vendor's scope in the Material Requisition, the earth pit design shall be as per IS-3043 code of practice for earthing. A minimum of four (4) number of earth pits shall be provided for grounding system integrity. In case number of pits required to meet 1 ohm resistance are more than (2), the number of earth pits shall be two times the actual number of pits required to meet resistance criteria. All these pits shall be securely connected with each other to form a one homogeneous system earth grid.

d) Each marshalling / system cabinet / panels etc shall be provided with system earth bus-bar which shall be insulated from the metallic body frame. This bus-bar shall be used to earth also signal zero volt references and signal cable screens. Terminals used for termination of spare conductor pairs / cores of multi-pair signal/control cables shall be connected to system earth bus-bar. Shorting links shall be used for spare terminal looping.

e) System bus-bars in the multiplexed cabinets can be joined together by permanent shorting links. System bus-bars of other cabinets can also be connected together provided they are permanently joined using 35 sq mm stranded copper conductor cable.

4.3.4 Safety Earth / Zener Barrier Earth

 All rights reserved

a) Whenever Zener barriers are selected or used to meet intrinsically safe requirements, the earthing terni'inal of the zener barriers shall be connected to a separate earth bus bar.

b) This earth shall meet all the requirements specified in Clause 4.3.3 of this specification.

c) Safety earth bus bar shall be directly connected to earth pits using dual insulated cable. Cable conductor size shall be minimum 95 sq. mm (c~pper).

4.4 Interface with DCS

The PLC shall be required to be interfaced to the Distributed Control System bus whenever specified. A suitable interface shall be offered in order to achieve the following functions:

a) Display of all input points under alarm/first out alarm connected to PLC or generated by PLC, continuous indication for analog signal on the main DCS operator console.

b) Generate shutdown reports on the logging printer of Distributed Control system.

c) To receive certain operational commands from the operator console for the operation of certain output devices connected to PLC

d) To display diagnostic message of PLC.

In general, PLC shall provide data in a well established MODBUS protocol format.

The interface shall be dual redundant unless otherwise specified.

The speed of data transfer shall be such that any change in I/O which is to be updated on the operator console shall not exceed 3 second from the time event to update on the operator console screen considering one second standard update rate in DCS operator console.

4.5 Sequence of Event (SOE) Function Requirement

Sequence of Event, whenever specified, for analog and digital inputs shall be generated and time stamped in PLC. The maximum resolution between two events shall not exceed specified PLC scan time unless specified otherwise. A separate SOE PC with 21" size TFT screen and printer shall be provided for PLC sub-system unless specified otherwise.

5.0 TESTING, INSTALLATION, COMMISSIONING AND ACCEPTANCE

5.1 General

5.1.1 This specification defines the basic guidelines to vendor for factory testing and acceptance, installation, commissioning and field acceptance of the complete PLC system. On the basis of this specification, vendor shall submit their own detailed testing, installation, commissioning and acceptance procedure. For hardware, the procedure shall include test name, purpose of test, test equipment / set up, definition of input, test procedure, results expected and acceptance criteria. Similarly for software, it shall include test name, details of the method, list of tests, sequence of execution, results expected and acceptance criteria.

All rights reserved

5.1.2 The testing and acceptance of the system shall be carried out on the approved testing procedures and criteria based on this specification and vendor's standard testing requirements and procedures.

5.2 Factory Acceptance Tests (FAT)

5.2.1 Vendor shall test and demonstrate the functional integrity of the system hardware and software. No material or equipment shall be transported until all required tests are successfully completed and certified "Ready for Shipment" by the owner/consultant.

5.2.2 The purchaser reserves the right to be involved and satisfy himself at each and every stage of inspection. The purchaser shall be free to request any specific test on any equipment considered necessary by him although not listed in this specification, as a part of approval of factory testing procedure. The cost of performing all tests shall be borne by the vendor.

5.2.3 Vendor to note that acceptance of any equipment or the exemption of inspection or testing shall in no way absolve the vendor of the responsibility for delivering the equipment meeting all the requirements specified in Material Requisition.

5.2.4 It shall be vendor's responsibility to modify and/or replace any hardware and modify the software if the specified functions are not completely achieved satisfactorily during testing and factory acceptance.

5.2.5 Schedule of FAT shall be included in the Vendor's proposal.

5.2.6 Vendor shall not replace any system component/module/sub-system unless it is failed. A log of all failed components/modules in a sub-system shall be maintained which shall give description of the failed component/module, effect of failure on the sub-system, cause of failure and number of hours of operation before it failed. If malfunction of a component/ module in a sub-system repeats, the test shall terminate and vendor shall replace the faulty component/ module. Thereafter the test shall commence all over again. If even after this replacement, the sub-system fails to meet the requirements, vendor shall replace the full sub-system by the one meeting the requirements and the system shall be tested all over again. If a sub-system fails during the test, which is not repaired and made operational within four hours of active repair time after the failure, the test shall be suspended and restarted all over again only after the vendor has replaced the device in the acceptable operation.

5.2.7 Testing and FAT shall be carried out in two phases. The minimum requirements for testing during these two phases shall be as follows:

5.2.7.1 Under the first phase, vendor shall perform tests at his works to ensure that all components function in accordance with the specification for each type of test. A test report shall be submitted for purchaser review within one week of completion of this test. Phase II testing (witness inspection) shall start only after this.

All subsystem shall undergo a minimum of 30 days burn in period. The burn-in time shall start after the sub-system is fully assembled and is powered up. It may include any such time for which the system has been kept powered on even for system generation and Phase I testing.

Following tests shall be performed by the vendor and reports shall be forwarded to

 All rights reserved

purchaser:

a) Quality control test which shall be carried out to assure quality of all components and modules in accordance with vendor's quality control and assurance procedures.

b) System pre-test which shall be physical check of all modules, racks, cabinets etc.

c) System power-up test which shall test functionally all hardware and software. This shall include testing of redundancy, System performance on power supply variations, application software testing and system diagnostic verification.

5.2.7.2 The second phase of testing shall systematically, fully and functionally test all hardware and software in the pre~ence of purchaser representatives. All subsystems shall be interconnected to simulate, as close as possible, the total integrated system. Following minimum tests shall be carried out:

a) Visual and mechanical testing, which shall be carried out in principle to assure correct, proper, good and neat workmanship by the vendor This testing shall include dimensional verification, Layout verification as per approved GA drawings, Verification of Sheet thickness / Quality of painting (outer and inner) / N~meplates, identifiers and tag plates / Adherence to ferruling philosophy / Dressing of wires / prefabricated cables and clearances / Locks and handles as a minimum.

b) Verification of Bill of Material. The Bill of material verification shall include both hardware and software.

c) Functional testing:

This shall include the simulation of each input and output to verify proper system response. The testing as a minimum shall include:

i) Complete system configuration loading.

ii) Demonstration of all PLC system builder functions including addition/deletion of an input/output, addition/ deletion of a rung or an element in a rung, generation of dynamic graphics and other views, report generation etc.

iii) 100% checking of logics configured in the PLC by connecting switch/lamp at input/output, by simulating inputs and verifying outputs preferably using simulator, other related functions like forcing, first out shall also be verified.

iv) Checking of scan time. Scan time verification shall be carried out using high resolution storage oscilloscope during Factory Acceptance Test based on the specified requirements considering discrete input by given step change. The scan time values so observed shall be within 90% confidence level. Incase of analog inputs, input shall be ramp or minimal step, however such reading for analog inputs should be noted only for reference.

v) Checking of all PLC console displays, keyboard and touch-screen

 All rights reserved

operation (wherever specified), printer/hard copier functions etc.

vi) System redundancy check including correct change over of the back-up unit in case of failure of main unit.

vii) System diagnostic checking for all subsystems on local level as well as on console, including checking of the testing software for I/O modules/signal conditioning modules, when specified.

viii) Checking of output status on processor failure.

ix) Checking of first-out alarm generation.

x) Simulation of power failure and system restart auto boot-up of system configuration and program after power restoration.

5.2.8 Vendor shall notify the purchaser at least three (3) weeks prior to factory acceptance test. In the event that representative arrives and the system is not ready for testing, vendor shall be liable for back charges for any extra time and expenses incurred.

5.3 Installation, Testing and Commissioning

5.3.1 Vendor shall offer the services of an installation team which would install the equipment in the control room, lay the interconnecting cables inside control room, check-out, test and commission the system.

All technical personnel assigned to the site by the vendor shall be fully conversant with the supplied system and software package, and shall have both hardware and software capability to bring the system on line quickly and efficiently with a minimum of interference with other concurrent construction and commissioning activities

5.3.2 Vendor's responsibility at site shall include all activities necessary to be performed to complete the job as per material requisition including:

a) Receipt of hardware/software and checking for completeness of supplies.

b) Installation of the system including for free supply equipment, if any.

c) Field cable termination and inter-cabinet cabling and termination.

d) Check out equipment installation.

e) Checking of interconnections, hardware and software configuration, overall system

f) Loop checking.

g) Field tests.

h) Commissioning and on-line debugging of the system.

i) Involvement during plant commissioning and performance of final acceptance test.

 All rights reserved

j) Co ordination for integration with DCS / other third party system.

5.3.3 Field Inspection

5.3.3.1 All equipments shall be inspected thoroughly by vendor after its receipt at site for completeness and proper functioning. Vendor must initiate the remedial action, in case unsatisfactory operation of any item is observed, with intimation to Engineer-in-charge.

5.3.3.2 Vendor must document all observations including details of any malfunction observed. Items/ equipments requiring total replacement must document the reasons for the same.

5.3.4 Loop Checking

5.3.4.1 Loop checking shall be carried out by vendor including checking the interconnections, configuration and overall system functioning.

5.3.4.2 Vendor's scope of work as a part of system installation and loop checking shall include termination of field cables in the control room, checking of interconnection between instrument/equipment, glanding, ferruling/tagging of interconnecting cables in control room, ferruling of field cables in control room and performing overall loop performance check.

5.3.4.4 The input signals shall be simulated by disconnecting/connecting the field wires for all field switches connected to 'PLC. All field transmitters connected to control room shall be loop checked at 0%, 50% & 100% of full scale (for both increasing and decreasing signals). Wherever receiver cards are used, the set point shall be generated by giving the input signal to receiver card. All outputs shall be checked in field, either for actual operation of solenoid valve or actual pick-up of electrical contractor for rotary equipments. Shutdown schemes shall be checked for proper functioning, configuration and actuation.

5.3.4.5 After loop checking is completed, vendor shall connect back any ~erminals and connections removed for loop checking.

5.4 System Acceptance

5.4.1 The owner shall provisionally takeover the system from vendor after System acceptance test. System acceptance test shall be started only after the satisfactory performance of loop checking and verification of all loop checking records by Engineer-in-charge.

5.4.2 The system acceptance test shall be carried out in the presence of owner's representative and Engineer-in-charge or his authorised representative. The tests carried out in System acceptance test shall be fully recorded and duly signed by all representatives participating in the System Acceptance Testing. .

5.4.3 Vendor shall carry out the following functional tests, as a part of system acceptance test, as a minimum.

a) Hardware verification as per final Bill of Material.

b) Visual and mechanical check-up for proper workmanship, identification, ferruling, nameplates etc.

c) System configuration as per approved configuration diagram.

 All rights reserved

d) Demonstration of all system function, display and diagnostics.

e) Checking of correct change-over of redundant devices.

f) Checking of various peripheral devices like printers and printing of all reports.

g) Complete checking of logic system, loading of user's program and checkout of results.

h) Checking of proper functioning of all disc drives, alarm summary, alarm history etc.

i) Proper information transfer on the information network by verifying system displays and printout.

5.5 Final Acceptance Test

The owner will take over the system from the vendor after the final acceptance test, which is defined as successful uninterrupted operation of the integrated system for three weeks. Vendor's personnel shall be present during the test. Any malfunctioning of the system components shall be replaced / repaired as required. Once the system failure is detected, the acceptance test shall start all over again from the beginning. The warranty period commences from the day owner takes over the system.

6.0 GENERAL REQUIREMENTS

6.1 Vendor shall comply fully with the general requirements of PLC system including logistic support services, documentation, warranty, maintenance contract and shipping instructions.

7.0 SHIPPING

7.1 All the materials used for packing, wrapping, sealers, moisture resistant barriers and corrosion preventers shall be of recognised brands and shall conform to the best standards in the areas for the articles which are packed

7.2 Workmanship shall be in accordance with best commercial practices and requirements of applicable specification. There shall be no defects, imperfections or omissions which would tend to impair the protection offered by the package as a whole.

7.3 The packing shall be suitable for storing in tropicalised climate, the ambient conditions, being specified injob specifications.

7.4 Shipment shall be thoroughly checked for completeness before final packing and shipment. Vendor shall be responsible for any delay in installation or commissioning schedule because of incomplete supply of equipments.

8.0 COMPREHENSIVE POST WARRANTY MAINTENANCE (ANNUAL MAINTENANCE CONTRACT) – CONTROL SYSTEM (TO BE QUOTED SEPARATELY)

8.1 Five (5) years Comprehensive Post Warranty Annual Maintenance Contract (PWAMC) for Control System. The start date (zero date) of Comprehensive PWAMC shall be the date of successful commissioning of entire plant. The Price of 1st, 2nd& 3rd Year of Comprehensive PWAMC shall be included in the Price of three-year O&M services above. For

 All rights reserved

Comprehensive PWAMC for Control System from 4th to 5th year, separate work order shall be placed by Owner 6 months prior to completion of 3rd year of O&M services.

The Package Vendor shall provide five years Comprehensive Annual Maintenance Contract (AMC) as part of their supply, installation and commissioning for the complete control System. The offer for AMC shall be valid for five years from date of expiry of the defect liability period.

8.2 Vendor shall provide total maintenance of the system including all hardware / software, workstations, networking equipment and any related accessories, peripherals etc. supplied by the vendor including all bought out items like interface devices, maintenance system etc. for complete system. System vendor shall also obtain AMC from OEM for all bought out items. The bid shall be made year wise up to 5 years and the quoted price shall be valid up to the expiry of Warranty Period.

8.3 The AMC order shall be placed separately by Client, after expiry of warranty period.

8.4 During warranty period, vendor shall carryout the regular, emergency and software maintenance services as per AMC [clause ii below]. Services provided during the warranty period shall be without any additional cost. Warranty shall cover replacement of any failure components / rectification of any defect at no extra cost and arranging requisite spare parts shall be entirely vendor's responsibility. Any failure to carry out the necessary replacement and rectify the defect during warranty period shall be at the risk and cost of the vendor.

The following are the minimum terms and conditions for AMC:

i. The AMC includes complete servicing, regular & preventive maintenance and breakdown maintenance whenever required for the complete system. This also includes all the maintenance spares, test equipments, tools and tackle as required, labours, spares parts which require routing replacement and all consumables (excluding paper, printer cartridge) required for repair or replacement of the all items supplied including bought out item.

ii. Visits

(a) Regular Visits:

The vendor's certified Field Service engineer shall visit the site once in three months for routine maintenance, providing guidance to operators as and when required, hardware / software checks/ inspections, full system checkouts, preventive maintenance adjustments and carry out corrective actions for the complete system.

It shall include study and advice on daily maintenance, cleaning of cabinet filters, modification/addition related to system configuration/data base, if any problem is reported, running of test programs, on-line servicing and solving reported problems. Checks shall be conducted on running system.

The software check shall include minor modifications to improve existing application performance, backup operations and application software updates (latest releases). Vendor shall take backup in 2 copies of last updated software also.

The duration of stay of engineer shall be limited to 3 days (8 hours per day) per visit. However, if any problem reported is not solved during the visit, engineer shall visit again and the visit shall not be counted as a regular visit.

 All rights reserved

Necessary visa for vendor's personnel shall be arranged by vendor themselves.

Identification of any hardware / software modification carried out in the system from the date of last modification and updating of as-built documents, records for loop diagrams, I/O assignment, alarm, logic block, control programs etc., as and when any modification is carried out or identified shall be vendor's responsibility. Owner reserves the right to reschedule the AMC regular visits maintaining the total no. of days and visits specified for a year.

(b) Preventive Maintenance Visits:
The engineers of the suppliers shall visit once in a year for Preventive Maintenance of the complete system subject to availability of shutdown. Employer will inform the vendor one month in advance for shutdown dates. The engineer shall carryout as a minimum complete overhaul of the system, inspection of hardware and software, fault prediction, inspection of power supply quality, environmental and operating condition checks, major repairs / replacement and detailed reporting, manual cleaning of each card and cabinet filters.

This visit is in addition to visit required for periodic maintenance.
Necessary visa for vendor's personnel shall be arranged by vendor themselves.

(c) Emergency Visits: The Engineers of the suppliers shall report to site with necessary spares within 24 hours after receipt of a written intimation / telephone call from RFCL for restoring the system. The engineers deputed shall be well qualified and experienced. The system must be brought back within 24 hours after reporting at site. Necessary visa for vendor's personnel shall be arranged by vendor themselves.

iii. The vendor shall explicitly define in AMC offer, the various checks to be carried out by the engineer for the above listed items during various visit listed herein. Also a standard document consisting of standard procedures and formats for carrying out various activities of Annual Maintenance Contract shall be furnished. These lists of checks are subject to client approval.

Employer personnel will work on system day-to-day basis and wherever possible, owner shall inform the type of failure of hardware /software to vendor based on diagnostic available with the system. However vendor shall be fully responsible to attend and rectify the root cause and the failure at the shortest possible time. Usage of spares available with the Owner may be utilized by Vendor and shall be replenishment within 1 month by vendor.

iv. Vendor to note that M/s RFCL engineers shall associate with the vendor while carrying out the Post Warranty Maintenance Contract activities. On-job training of these associated engineers shall be covered under this scope.

v. The service engineer shall maintain a Service Logbook at the site indicating the activities carried out during preventive & breakdown maintenance and also submit service / calibration reports based on the maintenance / repairs carried out, modules / parts repaired / replaced along with fault analysis.

vi. The contract shall include detailed proposal related to Maintenance Services with necessary tools and tackles. Travel, boarding and lodging for service engineer shall be included in this package itself.

vii. The supplier shall maintain at his premises or of the other agencies at a suitable nearest location with maintenance a stock of necessary spares required and no space shall be provided at owner's premises. Vendor shall furnish a list of spares in the AMC offer which shall be maintained by them for owner's review. In event of breakdowns, repairing or replacement should be possible within 48 hours maximum without any lead-time for procurement of spares.

All rights reserved

INSPECTION AND

TEST REQUIREMENTS

FOR INSTRUMENTATION

All rights reserved

CONTENT

ATTACHMENT

All rights reserved

1.0 INSPECTION AND TESTS

1.1. General

1.1.1 All instruments and system-oriented items shall undergo factory testing and inspection by authorized Third party representatives / Owner and PMC unless specified otherwise.

1.1.2 Wherever inspection at manufacturer's shop is waived because of any reason, the sub vendor's own testing reports shall be verified before despatch. In no case items shall be released without proper inspection verification.

1.1.3 The inspection and testing shall be carried out as per related specifications, international codes and practices/standards, approved documents and/or any other documents attached along with specifically suggesting testing to be carried out at manufacturer' works.

1.1.4 Items, for which 'Witness Inspection' is specifically exempted, manufacturer shall forward the test certificates as desired for review. The material shall be despatched only after obtaining written despatch clearance.

1.1.5 No system or system oriented item shall be despatched without integrated factory testing witnessed by representatives of / Third party inspector / Owner /PMC. The testing procedures shall be detailed out, based on testing requirements indicated in individual system specifications and shall be approved by Owner/ PMC. It must certify that the system is actually ready before calling the Owner/PMC for FAT. Also all the necessary documents and literature are to be submitted before calling for FAT.

1.1.6 Testing and inspection for all items shall be carried out as per approved factory testing procedures.

1.1.7 Performance specifications must be detailed out on each time which shall be verified by third party agency / by Owner / PMC during factory testing.

1.1.8 Acceptable criteria for Radiography and other NDT requirements for the instruments / instrument castings shall be inline with those specified in 'Piping Specifications' have been attached elsewhere in this package.

1.1.9 IBR certifications shall be provided by in the appropriate format duly signed by IBR authority or their authorised agency.

1.1.10 Verification of setpoint of rupture disc shall be part of witness inspection. Testing shall be carried out on the rupture disc, which are part of the actual rupture disc batch of manufacturer. This shall be in addition to the 3 numbers of spare rupture discs already indicated in the requirements. The testing, in general, shall be as per ASME section VIII.

1.1.11 Inspection and test items, witness inspection items for each kind of instrument at FAT (Factory acceptance test) shall be as shown in Table A.

1.1.12 Inspection and acceptance standards

Inspection and acceptance standards shall be as follows.

1.2. Visual Inspection

1.2.1 Conformation items

1. Type and model
2. Tag no.

 All rights reserved

3. Rating
4. Range, Scale and symbol of unit
5. Set pressure and capacity of safety valves
6. Valve characteristics and CV value of control valves
7. Name of materials
8. Nameplate
9. Colour of painting
10. Die Marking (nominal size, material of flange and direction of flow)
11. Accessories
12. Quantity

1.2.2 Harmful defects

- Defect such as cracks, deformation and flaws shall not be found in the casting, forging and machined surface of the pressure rating part.
- Defect such as inside surface weld protrusion; lack of fusion and incomplete penetration shall not be found in welded places of pressure retaining part.

1.2.3 The instrument shall be in rugged design and assembly of all components within the enclosure fixed firmly to avoid loosening or falling-off of any parts.

1.2.4 Painting of instrument's surface shall be such that there is no defect or lack of uniformity.

1.3. Dimensional Inspection

[X] Main parts
[ ]
[ ]

Check and conform to the requirement of Purchaser's Spec, approved drawings or applicable code and standards.

1.4. Material Inspection

1.4.1 Mill test certificates

Manufacturer shall submit the mill test certificates for the following parts.

1. ANSI class 900 or above (ALL material used at the P.T. ratings)

2. The following parts made of steel for :
   - High temperature service (Alloy steel above C-Mo steel used at temperature of 400ºC or over)
   - Low temperature service (Iron and steel material of design temperature bellow minus 11ºC containing Al-killed steel)
   - Corrosion-resistant materials

I.	Temperature detective parts	: **[X]**	Flange and Thermowell
II.	Orifice assembly	: **[X]**	Flange
III.	Venturi tube, Flow nozzle and Low-loss tube	: **[X]**	Body
IV.	Positive displacement flow meter and Turbine meter	: **[X]**	Body, Strainer and Straightner
V.	Area type flow meter	: **[X]**	Body and Flange
VI.	Displacement type liquid level meter	: **[X]**	Chamber and Flange
VII.	Glass Gauge	: **[X]**	Body and Flange
VIII.	Control valve	: **[X]**	Valve body, Bonnet,

All rights reserved

			Plug, Seat and Vane
IX.	Safety valve	: **[X]**	Valve body, Nozzle and Disc
X.	Condensate pot	: **[X]**	Body
XI.	Gas eliminator	: **[X]**	Body

1.4.2 Material grade 316SS or 316L SS of stainless steel, Purchaser may require Vendor to carry out the qualitative analysis for molybdenum.

1.5. Non-Destructive Examination

1. Control valve and safety valve
   Following Par. 1.5.2 and 1.5.3

2. Other instruments
   Shall be carried out in accordance with manufacture's standards approved by Purchaser

1.5.1 Ultrasonic Examination

1. Forging material on Orifice flange and Flow nozzle
   [X] ANSI class 900 or above

1.5.2 Radiography Examination

[ ] The pressure retaining casting parts

1. Applicable material and quantity (refer table VI)
   - Welded parts : [ ] JIS Z 3104, Z 3106
     [X] ASME VIII Division 1 uw-51 "Radiographic & Radioscopic Examination of Welded Joints"

2. Acceptant standards and grade
   - Casting : [ ] JIS G 0581
     [X] ASTEM E 446-9 or 186-93

All rights reserved

Table VI Radiography Examination

Materials			Quantity
Casting	class 1500 or over	C-steel	One out of total quantity of the same type, size and rating for pressure retaining critical parts(a)
	class 900 or over	C-Mo steel	
	class 600 or over	Cr-Mo steel Stainless steel	
	class 300 or over	Al-killed steel 2.5 Ni steel 3.5 Ni steel	
Pressure retaining welded parts	class 1500 or over	C-steel C-Mo steel	One spot on each welded parts per same material and same welder. All welded crossing parts
	class 300 or over	Cr-Mo steel Stainless steel	
	class 150 or over	Al-killed steel 2.5 Ni steel 3.5 Ni steel	

a. Following parts are Critical parts.
   - Groove-welded parts of cast body
   - Flange neck and valve seat's vicinity of cast body
   - Other welded parts included in pressure retaining parts

Note: 1. In case of practical difficulty to perform Radiography Test, Manufacture shall notify Purchaser in advance, and for such case, magnetic particle or liquid penetrant examination may be used in accordance with Par. 1.5.3 with Purchaser's approval.

2. For the welded parts having nominal size of 1-1/2 in. or below, magnetic particle or liquid penetrant examination in Par. 1.5.3 may be used.

1.5.3 Magnetic Particle or Liquid Penetrant Examination

[X] For the pressure retaining parts

All rights reserved

Table VII Magnetic particle / Liquid penetrant examination

Materials			Quantity
Casting	class 900 or over	C-steel	20% of total quantity of the same type, size and rating for pressure retaining critical parts (a)
	class 600 or over	Cr-Mo steel Cr-Mo steel Stainless steel	
	class 150 or over	Al-killed steel 2.5 Ni steel 3.5 Ni steel	
Pressure retaining welded parts (b)	class 150 or over	All materials	20% of total welded parts

a. Refer to Par. 1.5.2(1).
b. Including butt groove-welded parts at site.

1.6. Pressure Test

1.6.1 Control Valve

1. Body and Bonnets

[X] Hydrostatic test with Applicable codes and standards

2. Body of special type

[X] Hydrostatic test

Test pressure and Hold time

[X] 1.5 times of max. Operating pressure / min. 2 kgcm2g
[X] Minimum 5 minutes.

3. Permanent distortion or Leakage

[X] shall not be found

1.6.2 Safety Valve or Safety Relief Valve

1. Pressure retaining parts

[X] Hydrostatic test before assembling

i. Test pressure and Hold time

[ ] 1.5 times of Max. Operating pressure / min. 2 kgf/cm2g.
[X] 2.2 times of Max. Operating pressure.
[X] Minimum 5 minutes.

All rights reserved

ii Distortion or leakage
[X] shall not be found

2. The out side parts of enclosed type
[X] Hydrostatic test after assembling

i. Test pressure and Hold time
[X] 1.5 times. Nominal pressure of flange
[ ] 2.2 times. Nominal pressure of flange
[X] Minimum 5 minutes.

ii. Defects
[X] Shall not be found

3. Special type valves

[X] Hydrostatic test with the manufacturer's standards approved by purchaser, where Par. 1.6.2(1) and (2) are not applicable

1.6.3 The pressure retaining parts of instrument

[X] Hydrostatic test or Pneumatic test as per applicable codes and standard

I Test pressure and Hold time
[X] 1.5 time of Max. Operating pressure / Min. 2 kg/cm2g
[X] Min. 5 minutes

ii Permanent distortion or Leakage
[X] Shall not be found

If the above mentioned test is technically difficult, the test shall be carried out in accordance with the manufacturer's standards approved by purchaser.

1.7. Pneumatic Test

1.7.1 The pneumatic test for instrument

I Test pressure & Hold time

[X] Max. Operating Pressure. (Design press.)
[X] Minimum 5 minutes

ii Permanent distortion or Leakage

[X] Shall not be found

1.8. Seat Leakage Test

1.8.1 Control Valve

Allowable leakage valve / (code):

[X] ANSI B16.104 (FCI 70-2)

Unless other wise specified, butterfly valves shall not require the seat leakage test.

1.8.2 Safety valve

All rights reserved

Seat leakage test (closing property) as follows.

1. Safety valve for Steam

   i. Test pressure

      [X] 90% of set pressure

   ii. Leakage

      [X] Shall not be found

2. Safety valve for Gas

   i. Test pressure

      [X] 90% of set pressure

   ii. Allowable leakage value (Refer Table – VIII)

Table VIII - Allowable leakage value of Safety valve

Type	Orifice Area (mm)	Number of Bubbles (min)	Leakage Value (cm3/min)
General	16.0 and less 20.5 and over	40 20	11.80 5.90
Balance bellows	16.0 and less 20.5 and over	50 30	14.75 8.85

3. Relief safety valves, Vacuum breakers and atmospheric valve
   [X] Manufacture's standard (approved by Purchaser)

1.9. Performance Test

For each instruments, the performance test shall be carried out in accordance with procedure approved by Client / PMC.
Acceptance standard shall be in accordance with applicable codes & standard, All specification, and manufacture's standard shall be approved by Client / PMC.

1.10. Steam Test

Steam test shall be performed as follows:

[ ] Valves used for steam service Temperature of 450°C or more, and the body ratings of class 600 and above.

[ ] After attaining the steady surface temperature same as temperature of the service with the pressure of service condition.

In the case, when steam test has been performed and the report is submitted for the valve of same type, same bore size and material from the same lot, the steam test for the other valves may be omitted.

All rights reserved

1. Leakage

   i. Body : [ ] Shall not be found
   ii. Seat : [ ] As per specified leakage value

2. Operation

   [ ] To be smooth

   After the steam test, the test of Par. 1.6 and Par. 1.8 shall be carried out.

1.11. Insulation Resistance Test

1. Power supply circuit & alarm circuit : 10M Ω or over (instrument panel: 3 MΩ or over/each panel)

2. Signal circuit : 5M Ω or more (instrument panel: 3 MΩ or More per panel)

The test shall be carried out in accordance with the applicable codes & Standards. Due to any technical constraint to measure, this test can be omitted

1.12. High-voltage Test

1. A-C power supply and alarm circuits

   i. Voltage level less than 250 V : **[X]** A-C 1500 V

   ii. Voltage level 250 V and above : **[X]** A-C 2E + 1000V

   'E' is the rated voltage.

2. D-C power supply circuits : **[X]** A-C 500V

   Test can be omitted in case of any technical constraint.

 All rights reserved

Table A : Table of Inspection and Test Items

Kind of Instrument	Inspection and Test Items										
	Visual insp.	Dimensional insp.	Material insp.	Non-destructive exam	Pressure test	Pneumatic test	Seat Leakage test	Performance test	Insulation resistance test	High voltage test	Steam test
1 Thermocouple	○ ●T	○●T	—	—	—	—	—	□●T	□●T	□●T	—
2 Resistance thermometer bulb	●T ○	●T ○	—	—	—	—	—	●T □	□●T	□●T	—
3 Compensating lead wire	○●T	○●T	—	—	—	—	—	□●T	□●T	□●T	—
4 Bimetallic thermometer	○●T	○●T	—	—	—	—	—	□●T	—	—	—
5 Gas or liquid-filled thermometer	○●T	○●T	—	—	—	—	—	●T □	—	—	—
6 Thermowell	○●T	○●T	○ □●T	○ □●T	○ □●T	—	—	—	—	—	—
7 Orifice plate	○●T	○ □●T	○●T	—	—	—	—	—	—	—	—
8 Orifice flange	○●T	○●T	○ □●T	○ □●T	—	—	—	—	—	—	—
9 Restriction orifice	○●T	○ □●T	○●T	—	—	—	—	—	—	—	—
10 Flow nozzle low-loss tube	○●T	○●T	○ □●T	○ □●T	○ □●T	—	—	—	—	—	—
11 Venturi tube	○●T	○●T	○ □●T	○ □●T	○ □●T	—	—	—	—	—	—
12 Positive displacement flow meter	●T ○	●T ○	●T ○ □	●T ○ □	●T ○ □	—	—	●S ○ □	●T ○ □	●T ○ □	—
13 Area type flow meter	○●T	○●T	○ □●T	○ □●T	○ □●T	—	—	○ □●T	○ □●T	○ □●T	—
14 Thermal mass flow meter	●T ○	●T ○	●T ○	—	●T ○ □	—	—	●S ○ □	●T ○ □	●T ○ □	—
15 Turbine meter	●T ○	●T ○	●T ○ □	●T ○ □	●T ○ □	—	—	●S ○ □	●T ○ □	●T ○ □	—
16 Differential pressure flow meter	●T ○	●T ○	—	—	●T ○ □	—	—	●T ○ □	●T ○ □	●T ○ □	—
17 Differential pressure transmitter	●T ○	●T ○	—	—	●T ○ □	—	—	●T ○ □	●T ○ □	●T ○ □	—
18 Magnetic flow meter	●T ○	●T ○	●T ○	●T ○ □	●T ○ □	—	—	●S ○ □	●T ○ □	●T ○ □	—
19 Bourdon gauge	○●T	○●T	—	—	○ □●T	—	—	○ □●T	—	—	—
20 Draft gauge	○●T	○●T	—	—	—	—	—	○ □●T	—	—	—
21 Differential pressure gauge	○●T	○●T	—	—	○ □●T	—	—	○ □●T	—	—	—
22 Pressure transmitter	○●T	○●T	—	—	○ □●T	—	—	○ □●T	○ □●T	○ □●T	—
23 Displacement type level indicator, controller	●T ○	●S ○ □	●T ○	●T ○	●S ○ □	—	—	●S ○ □	●S ○ □	●T ○ □	—
24 Chamber for displacement type level meter	○●T	○ □●T	○ □●T	○ □●T	○ □●T	—	—	—	—	—	—
25 Glass gauge	○●T	○ □●T	○ □●T	○ □●T	○ □	—	—	—	—	—	—
26 Float type level meter,	●T ○	●S ○	●T ○ □	●T ○ □	●S ○ □	—	—	●S ○ □	●S ○ □	●T ○ □	—

All rights reserved

Kind of Instrument	Inspection and Test Items										
	Visual insp.	Dimensional insp.	Material insp.	Non-destructive exam	Pressure test	Pneumatic test	Seat Leakage test	Performance test	Insulation resistance test	High voltage test	Steam test
27 Differential pressure type level meter	○●T	●T ○	●T ○	—	●T ○ □	—	—	●T ○ □	●T ○ □	●T ○ □	—
28 Purge type level meter	○●T	○●T	—	—	—	—	—	○ □●T	—	—	—
29 Capacitance type level meter	○●T	●T ○ □	●T ○	—	—	—	—	●T ○ □	●T ○ □	●T ○ □	—
30 Conductivity type level meter	○●T	●T ○	●T ○	—	—	—	—	●T ○ □	●T ○ □	●T ○ □	—
31 Conductivity type level meter	●T ○	●S ○	—	—	—	—	—	●S ○ □	●S ○ □	●T ○ □	—
32 Weight sounding type level meter	●T ○	●S ○	—	—	—	—	—	●S ○ □	●S ○ □	●T ○ □	—
33 Radiation type level meter	●T ○	●S ○	—	—	—	—	—	●S ○ □	●S ○ □	●T ○ □	—
34 Pneumatic type control valve	●T ○	●S ○	●T ○ □	○ □●T	●S ○ □	—	●S ○ □	●S ○ □	●T ○ □	●T ○ □	
35 Hydraulic type control valve	●T ○	●S ○	●T ○ □	●T ○ □	●S ○ □	—	●S ○ □	●S ○ □	●T ○ □	●T ○ □	
36 Motor-operated control valve	●T ○	●S ○	●T ○ □	●T ○ □	●S ○ □	—	●S ○ □	●S ○ □	●S ○ □	●S ○ □	
37 Self-acting control valve	○●T	○●T	○ □●T	○ □●T	○ □●T	—	—	○ □●T	—	—	—
38 Indicator	○●T	○●T	—	—	—	—	—	○ □●T	○ □●T	○ □●T	—
39 Recorder unit	○●T	○●T	—	—	—	—	—	○ □●T	○ □●T	○ □●T	—
40 Controller unit	○●T	○●T	—	—	—	—	—	○ □●T	○ □●T	○ □●T	—
41 Integrator unit	○●T	○●T	—	—	—	—	—	○ □●T	○ □●T	○ □●T	—
42 Alarm setting unit	○●T	○●T	—	—	—	—	—	○ □●T	○ □●T	○ □●T	—
43 Computing unit	○●T	○●T	—	—	—	—	—	○ □●T	○ □●T	○ □●T	—
44 Converter unit	○●T	○●T	—	—	—	—	—	○ □●T	○ □●T	○ □●T	—
45 Limiter unit	○●T	○●T	—	—	—	—	—	○ □●T	○ □●T	○ □●T	—
46 Power source unit	○●T	○●T	—	—	—	—	—	○ □●T	○ □●T	○ □●T	—
47 Instrument panel	●T ○	●S ○	—	—	●T ○ □	●S ○ □	—	●S ○ □	●T ○ □	●T ○ □	—
48 Instrument desk	●T ○	●S ○	—	—	—	—	—	●S ○ □	●T ○ □	●T ○ □	—
49 Gauge board	●T ○	●S ○	—	—	●T ○ □	●S ○ □	—	●S ○ □	●T ○ □	●T ○ □	—
50 Safety valve	●T ○	●S ○ □	●T ○ □	●T ○ □	●T ○ □	—	●S ○ □	●S ○ □	—	—	—
51 Pilot operated safety relief valve	●T ○	●S ○ □	●T ○ □	●T ○ □	●T ○ □	—	●S ○ □	●S ○ □	—	—	—
52 Vacuum breaker	●T ○	●S ○ □	●T ○ □	●T ○ □	●T ○ □	—	●S ○ □	●S ○ □	—	—	—
53 Atmospheric valve	●T	●S	●T	●T	●T	—	●S	●S	—	—	—

All rights reserved

Kind of Instrument	Inspection and Test Items										
	Visual insp.	Dimensional insp.	Material insp.	Non-destructive exam	Pressure test	Pneumatic test	Seat Leakage test	Performance test	Insulation resistance test	High voltage test	Steam test
	○	○ □	○ □	○ □	○ □		○ □	○ □			
54 Gas chromato-graph	●T ○	●T ○	—	—	—	●T ○ □	—	●S ○ □	●S ○ □	●T ○ □	—
55 Mass spectro-meter	●T ○	●T ○	—	—	—	●T ○ □	—	●S ○ □	●S ○ □	●T ○ □	—
56 Infrared type gas analyzer	●T ○	●T ○	—	—	—	●T ○ □	—	●S ○ □	●S ○ □	●T ○ □	—
57 Magnetic type gas analyzer	●T ○	●T ○	—	—	—	●T ○ □		●S ○ □	●S ○ □	●T ○ □	—
58 Thermal conductivity type analyzer	●T ○	●T ○	—	—	—	●T ○ □	—	●S ○ □	●S ○ □	●T ○ □	—
59 Combustion type gas analyzer	●T ○	●T ○ □	—	—	—	●T ○ □	—	●S ○ □	●S ○ □	●T ○ □	—
60 Density type gas analyzer	●T ○	●T ○	—	—	—	—	—	●S ○ □	●S ○ □	●T ○ □	—
61 Photo-electric type analyzer	●T ○	●T ○	—	—	—	—	—	●T ○ □	●T ○ □	●T ○ □	—
62 Moisture analyzer	○●T	●T ○	—	—	—	—	—	●T ○ □	●T ○ □	●T ○ □	—
63 pH meter	○●T	○●T	—	—	—	—	—	○ □●T	○ □●T	○ □●T	—
64 Turbidity analyzer Water quality analyzer	●T ○	●T ○	—	—	●T ○ □	—	—	●T ○ □	●T ○ □	●T ○ □	—
65 Density meter	○●T	○●T	—	—	○ □●T	—	—	○ □●T	○ □●T	○ □●T	—
66 Electric conductivity meter	○●T	○●T	—	—	○ □●T	—	—	○ □●T	○ □●T	○ □●T	—
67 Flame detector	●T ○	●T ○	—	—	—	—	—	●S ○ □	●S ○ □	●T ○ □	—
68. Mass Flow meter	●T ○	●T ○	●T ○ □	●T ○ □	●T ○ □	—	—	●S ○ □	●T ○ □	●T ○ □	—
69. Vortex Flow Meter	●T ○	●T ○	●T ○ □	●T ○ □	●T ○ □	—	—	●S ○ □	●T ○ □	●T ○ □	—
70 Gas detector	●T ○	●T ○	—	—	—	—	—	●S ○ □	●S ○ □	●T ○ □	—

○ : Tested by Manufacturer.
● : Tested by manufacturer & witnessed by 3rd party inspector(TPI).
□ : Manufacturer will submit Inspection & test records.
T : Total Inspection by TPI.
S : Sample inspection by TPI.(10% of total quantity of the same type & rating.

Notes: PMC/OWNER may witness any or all testing in stages during manufacturer or at final stage before shipment.

 All rights reserved